SHOWBIZ P A TIM

echn rainin 6

SYM	ECO NO.	REVISIONS DESCRIPTION	DATE	APPROVED
A	1200	PRODUCTION RELEASE	4/5/82	C.J.

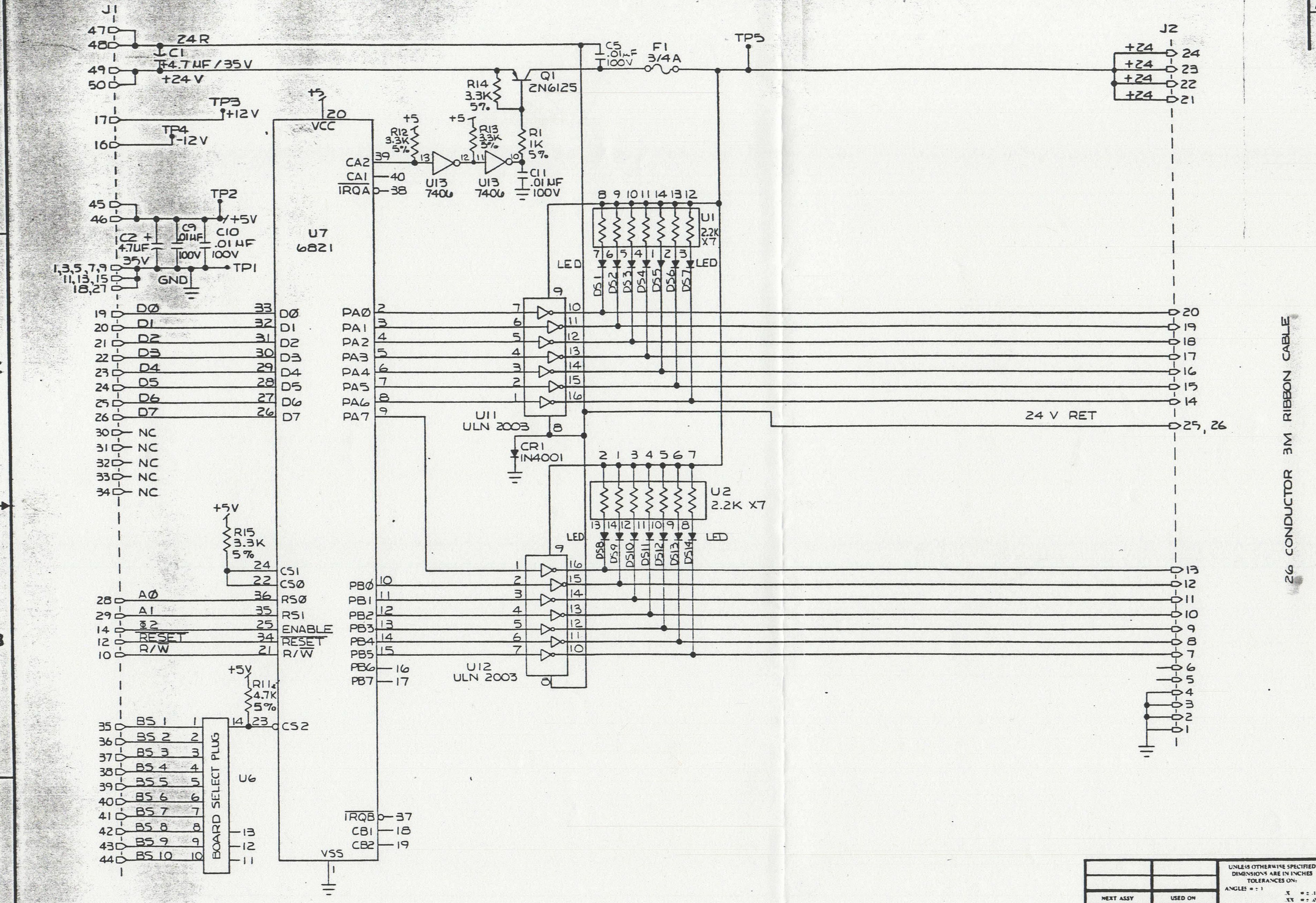
J1
47
48
24R
C1
4.7UF/35V
49
50
+24V
C5
.01UF
100V
F1
3/4A
TP5
R14
3.3K
5%
Q1
2N6125
J2
+24
24
23
22
21
TP3
+12V
17
TP4
-12V
16
+5
20
VCC
R12
3.3K
5%
R13
3.3K
5%
R1
1K
5%
CA2
39
CA1
40
IRQA
38
U13
7406
C11
.01UF
100V
TP2
45
46
+5V
C2
4.7UF
35V
C9
.01UF
100V
C10
.01UF
100V
U7
6821
1,3,5,7,9
11,13,15
18,27
GND
TP1
8 9 10 11 14 13 12
U1
2.2K
X7
7 6 5 4 1 2 3
LED
DS1 DS2 DS3 DS4 DS5 DS6 DS7
19 D0 33 D0
20 D1 32 D1
21 D2 31 D2
22 D3 30 D3
23 D4 29 D4
24 D5 28 D5
25 D6 27 D6
26 D7 26 D7
PA0 2
PA1 3
PA2 4
PA3 5
PA4 6
PA5 7
PA6 8
PA7 9
U11
ULN 2003
CR1
1N4001
24 V RET
25, 26
30 NC
31 NC
32 NC
33 NC
34 NC
2 1 3 4 5 6 7
U2
2.2K X7
13 14 12 11 10 9 8
DS8 DS9 DS10 DS11 DS12 DS13 DS14
26 CONDUCTOR 3M RIBBON CABLE
R15
3.3K
5%
24 CS1
22 CS0
28 A0 36 RS0
29 A1 35 RS1
14 Φ2 25 ENABLE
12 RESET 34 RESET
10 R/W 21 R/W
PB0 10
PB1 11
PB2 12
PB3 13
PB4 14
PB5 15
PB6 16
PB7 17
U12
ULN 2003
R11
4.7K
5%
14 23 CS2
35 BS 1
36 BS 2
37 BS 3
38 BS 4
39 BS 5
40 BS 6
41 BS 7
42 BS 8
43 BS 9
44 BS 10
BOARD SELECT PLUG
U6
13
12
11
IRQB 37
CB1 18
CB2 19
VSS
20 19 18 17 16 15 14
13 12 11 10 9 8 7 6 5 4 3 2 1

NEXT ASSY	USED ON
APPLICATION	

UNLESS OTHERWISE SPECIFIED DIMENSIONS ARE IN INCHES
TOLERANCES ON:
ANGLES = ± 1
.X = ± .1
.XX = ± .01
.XXX = ± .010
SURFACE FINISH ✓

MATERIAL:

FINISH:

NOTICE TO ALL PERSONS RECEIVING THIS DRAWING CONFIDENTIAL: Reproduction Forbidden without the specific written permission of Pizza Time Theatre Inc. of Sunnyvale, California. This drawing is only conditionally issued, and neither receipt nor possession thereof confers or transfers any right in, or license to use, the subject matter of the drawing or any design or technical information shown thereon, nor any right to reproduce this drawing or any part thereof, except for manufacture by vendors for Pizza Time Theatre Inc. and for manufacture under the corporation's written license, no right to reproduce this drawing is granted or the subject matter thereof unless by written agreement with or written permission from the corporation.

DO NOT SCALE DRAWING

DRAWN BY L.PERCIVAL DATE 4-5-82
CHECKED L. FORTE 4-5-82
ENGINEER
PROJECT ENGINEER
MFG ENGINEER C JORGENSEN 4/5/82

OUTSTANDING ECNs

Chuck E. Cheese's Pizza Time Theatre

Pizza Time Theatre Inc.
1213 Innsbruck Dr.
Sunnyvale, CA 94086

c 1979 Pizza Time Theatre Inc.

TITLE
CHARACTER DRIVER
SCHEMATIC

SIZE D
DRAWING NO 08-0034
REV A
SCALE NONE
SHEET 1 OF 1

SYM	ECO NO.	REVISIONS DESCRIPTION	DATE	APPROVED
B	0808	SHORTED T1 PINS 2 TO 3 AND 6 TO 7.	6/26/81	RH

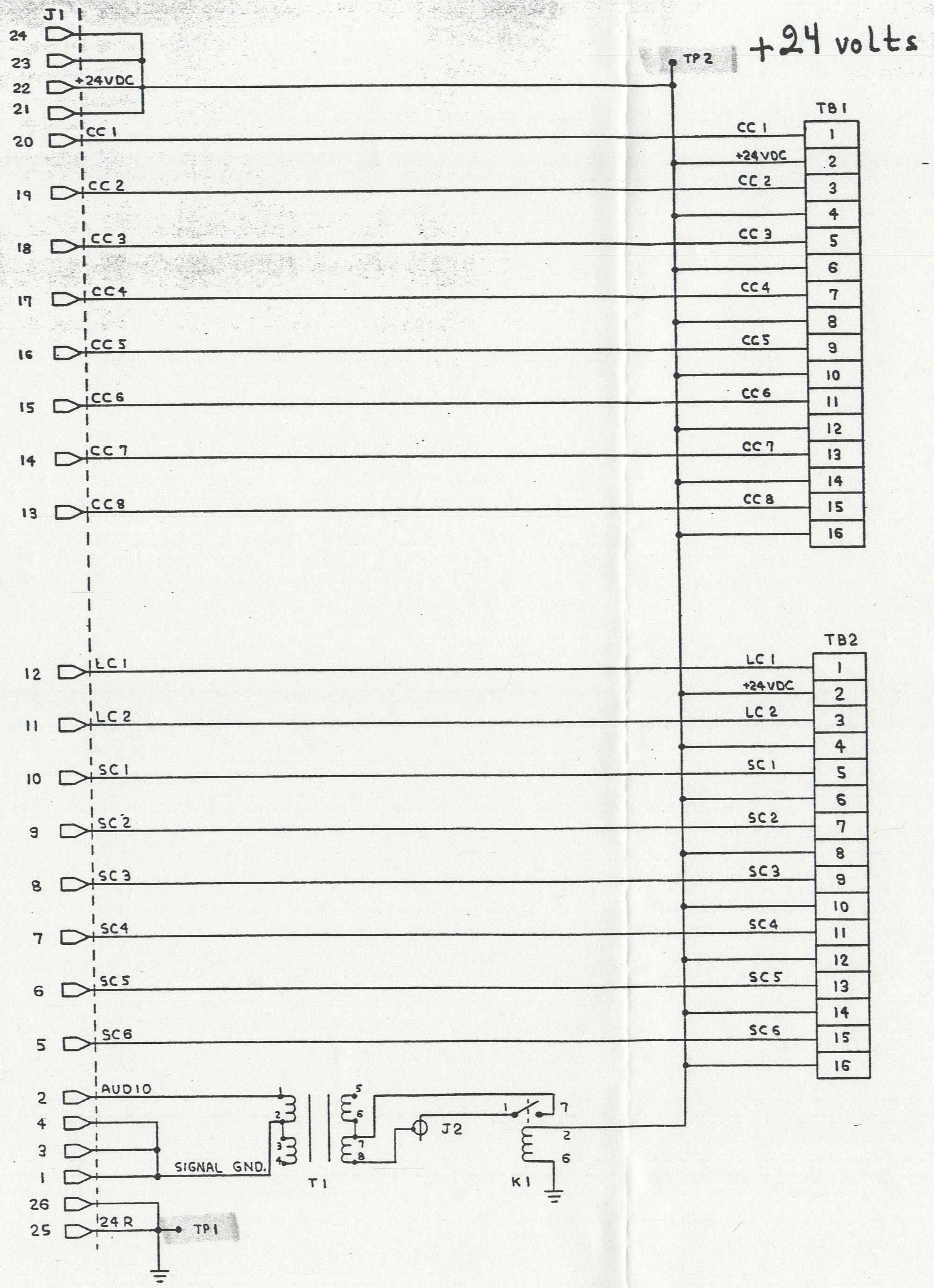
J1
24
23
22
21
+24VDC
20
CC 1
19
CC 2
18
CC 3
17
CC4
16
CC 5
15
CC6
14
CC 7
13
CC8
12
LC 1
11
LC 2
10
SC 1
9
SC 2
8
SC 3
7
SC4
6
SC 5
5
SC6
2
AUDIO
4
3
1
SIGNAL GND.
26
25
24 R
TP1
T1
1
2
3
4
5
6
7
8
J2
K1
1
7
2
6
TP2
TB1
CC 1
+24VDC
CC 2
CC 3
CC4
CC5
CC 6
CC 7
CC 8
1
2
3
4
5
6
7
8
9
10
11
12
13
14
15
16
TB2
LC 1
+24VDC
LC 2
SC 1
SC 2
SC 3
SC4
SC 5
SC 6
1
2
3
4
5
6
7
8
9
10
11
12
13
14
15
16

+24 volts

OUTSTANDING ECNs

NEXT ASSY	USED ON
APPLICATION	

NOTICE TO ALL PERSONS RECEIVING THIS DRAWING CONFIDENTIAL: Reproduction Forbidden without the specific written permission of Pizza Time Theatre Inc. of Cupertino, California. This drawing is only conditionally issued, and neither receipt nor possession thereof confers or transfers any right in, or license to use, the subject matter of the drawing or any design or technical information shown thereon, nor any right to reproduce this drawing or any part thereof, except for manufacture by vendors for Pizza Time Theatre Inc. and for manufacture under the corporation's written license, no right to reproduce this drawing is granted or the subject matter thereof unless by written agreement with or written permission from the corporation.

UNLESS OTHERWISE SPECIFIED DIMENSIONS ARE IN INCHES TOLERANCES ON:
ANGLES = ± 1°
.X = ± .1
.XX = ± .03
.XXX = ± .010
SURFACE FINISH ✓
MATERIAL:
FINISH:

DO NOT SCALE DRAWING
DRAWN BY DATE
CHECKED
ENGINEER
A.G.G. AGG 9/24/79
PROJECT ENGINEER
MFG ENGINEER

Pizza Time Theatre Inc.
10060 Bubb Road
Cupertino, CA 95014

© 1978 Pizza Time Theatre Inc.

TITLE
SCHEMATIC
SOLENOID BOARD

SIZE D
DRAWING NO. 08-0005
REV B
SCALE NONE
SHEET 1 OF 1

* ENABLE FOR CO?

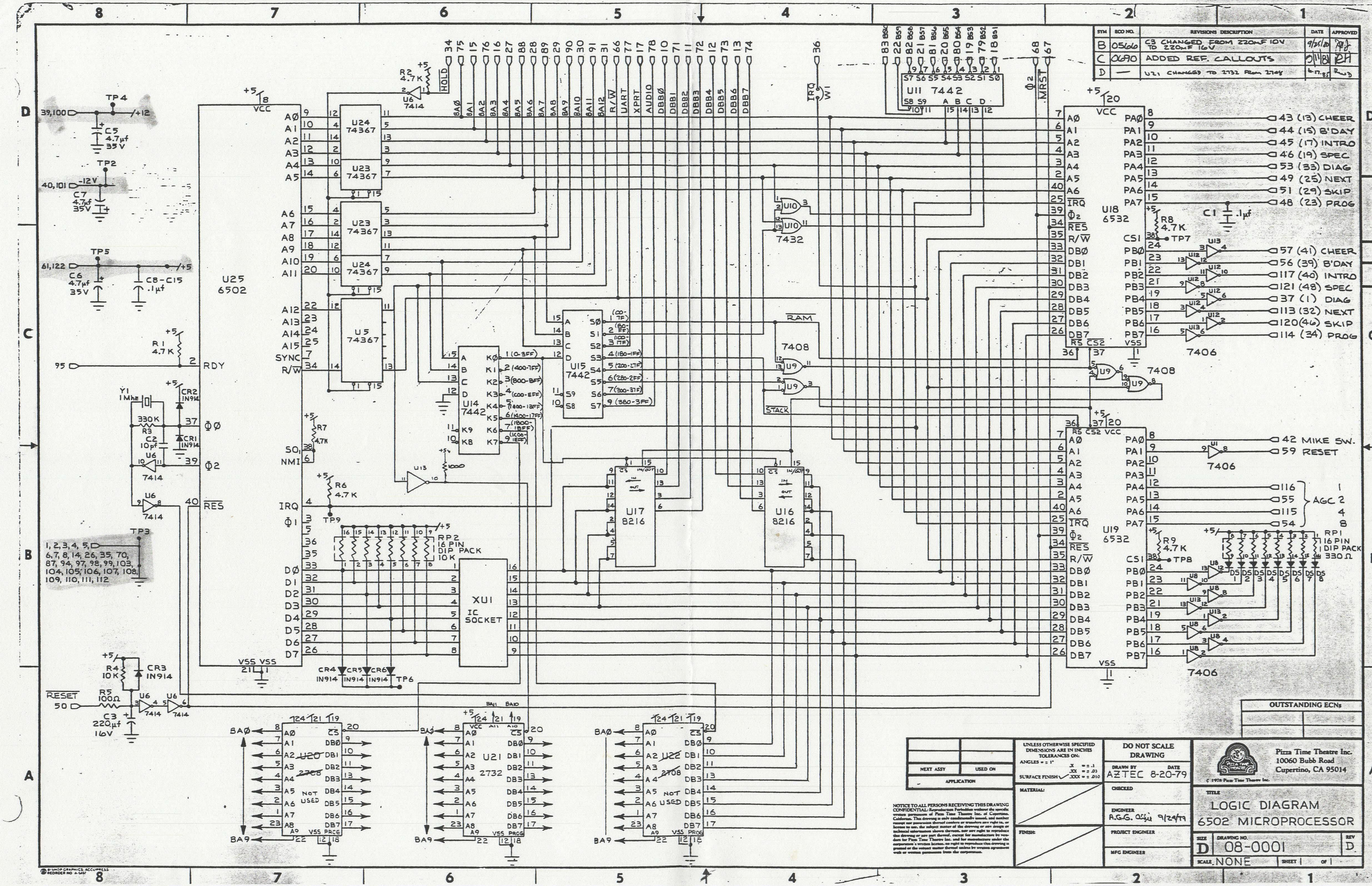
8
7
6
5
4
3
2
1
D
C
B
A
39,100
TP4
+12
C5 4.7µf 35V
40,101
TP2
-12V
C7 4.7µf 35V
61,122
TP5
+5
C6 4.7µf 35V
C8-C15 .1µf
U25 6502
RDY
95
R1 4.7K
Y1 1Mhz
CR2 IN914
330K R3
C2 10pf
CR1 IN914
Φ0
Φ2
U6 7414
RES
TP3
1, 2, 3, 4, 5, 6, 7, 8, 14, 26, 35, 70, 87, 94, 97, 98, 99, 103, 104, 105, 106, 107, 108, 109, 110, 111, 112
R4 10K
CR3 IN914
RESET 50
R5 100Ω
C3 220µf 16V
VCC
A0 A1 A2 A3 A4 A5 A6 A7 A8 A9 A10 A11 A12 A13 A14 A15
SYNC
R/W
SO
NMI
IRQ
Φ1
D0 D1 D2 D3 D4 D5 D6 D7
VSS VSS
R7 4.7K
R6 4.7K
TP9
U24 74367
U23 74367
U5 74367
R2 4.7K
HOLD
34 75 15 76 16 27 88 28 89 29 90 30 91 31 66 77 17 78 10 71 11 72 12 73 13 74
BA0 BA1 BA2 BA3 BA4 BA5 BA6 BA7 BA8 BA9 BA10 BA11 BA12 R/W UART XPRT AUDIO DBB0 DBB1 DBB2 DBB3 DBB4 DBB5 DBB6 DBB7
U14 7442
K0 1 (0-3FF)
K1 2 (400-7FF)
K2 3 (800-BFF)
K3 4 (C00-EFF)
K4 5 (1400-13FF)
K5 6 (1400-17FF)
K6 7 (1800-1BFF)
K7 9 (1C00-1EFF)
U15 7442
S0 1 (00-7F)
S1 2 (80-FF)
S2 3 (100-17F)
S3 4 (180-1FF)
S4 5 (200-27F)
S5 6 (280-2FF)
S6 7 (300-37F)
S7 9 (380-3FF)
U13
1000
RP2 16 PIN DIP PACK 10K
XU1 IC SOCKET
CR4 CR5 CR6 IN914 IN914 IN914
TP6
U17 8216
U16 8216
CS IN/OUT
36
IRQ W1
RAM
7408
U9
STACK
U10 7432
83 BS0 22 BS9 82 BS8 21 BS7 81 BS6 20 BS5 80 BS4 19 BS3 79 BS2 18 BS1
U11 7442
S7 S6 S5 S4 S3 S2 S1 S0
S8 S9 A B C D
68 Φ2
67 MRST
U18 6532
U19 6532
PA0 PA1 PA2 PA3 PA4 PA5 PA6 PA7
PB0 PB1 PB2 PB3 PB4 PB5 PB6 PB7
CS1 RS CS2 VSS
DB0 DB1 DB2 DB3 DB4 DB5 DB6 DB7
R8 4.7K TP7
R9 4.7K TP8
C1 .1µf
43 (13) CHEER
44 (15) B'DAY
45 (17) INTRO
46 (19) SPEC.
53 (33) DIAG
49 (25) NEXT
51 (29) SKIP
48 (23) PROG
57 (41) CHEER
56 (39) B'DAY
117 (40) INTRO
121 (48) SPEC
37 (1) DIAG
113 (32) NEXT
120 (46) SKIP
114 (34) PROG
U12
U13
7406
42 MIKE SW.
59 RESET
U1
116 1
55 2
115 4
54 8
AGC
RP1 16 PIN DIP PACK 330Ω
U8
DS1 DS2 DS3 DS4 DS5 DS6 DS7 DS8
U20 2708 NOT USED
U21 2732
U22 2708 NOT USED
CS
A0 A1 A2 A3 A4 A5 A6 A7 A8 A9
DB0 DB1 DB2 DB3 DB4 DB5 DB6 DB7
VSS PRGE
BA0
BA9
BA11 BA10
BISHOP GRAPHICS, ACCUPRESS REORDER NO. A-M10

SYM	ECO NO.	REVISIONS DESCRIPTION	DATE	APPROVED
B	05666	C3 CHANGED FROM 220mF 10V TO 220mF 16V	9/25/80	
C	0690	ADDED REF. CALLOUTS	5/11/81	RH
D	—	U21 CHANGED TO 2732 FROM 2708	6.17.85	RWD

OUTSTANDING ECNs

NEXT ASSY
USED ON
APPLICATION

UNLESS OTHERWISE SPECIFIED DIMENSIONS ARE IN INCHES TOLERANCES ON:
ANGLES = ± 1°
.X = ± .1
.XX = ± .03
.XXX = ± .010
SURFACE FINISH ✓

MATERIAL:

FINISH:

DO NOT SCALE DRAWING

DRAWN BY AZTEC
DATE 8-20-79
CHECKED
ENGINEER A.G.G. 9/24/79
PROJECT ENGINEER
MFG ENGINEER

Pizza Time Theatre Inc.
10060 Bubb Road
Cupertino, CA 95014

© 1978 Pizza Time Theatre Inc.

TITLE
LOGIC DIAGRAM
6502 MICROPROCESSOR

SIZE D
DRAWING NO. 08-0001
REV D.
SCALE NONE
SHEET 1 OF 1

NOTICE TO ALL PERSONS RECEIVING THIS DRAWING CONFIDENTIAL: Reproduction Forbidden without the specific written permission of Pizza Time Theatre Inc. of Cupertino, California. This drawing is only conditionally issued, and neither receipt nor possession thereof confers or transfers any right in, or license to use, the subject matter of the drawing or any design or technical information shown thereon, nor any right to reproduce this drawing or any part thereof, except for manufacture by vendors for Pizza Time Theatre Inc. and for manufacture under the corporation's written license, no right to reproduce this drawing is granted or the subject matter thereof unless by written agreement with or written permission from the corporation.

SYM	ECO NO.	REVISIONS DESCRIPTION	DATE	APPROVED
B				
C	0460	J1 WAS CHANGED FROM P/N 530-0016 TO P/N 530-0021	6/2/80	
D	0533	ADDED MIC. HOOK-UP TO DWG. IN ZONE D-2	9/25/80	
E	0837	ADDED W2 JUMPER IN ZONE B8 - USED ON -20 VERSION ONLY.	7/27/8	BH
F	1629	REMOVED NOTES	4-13 83	

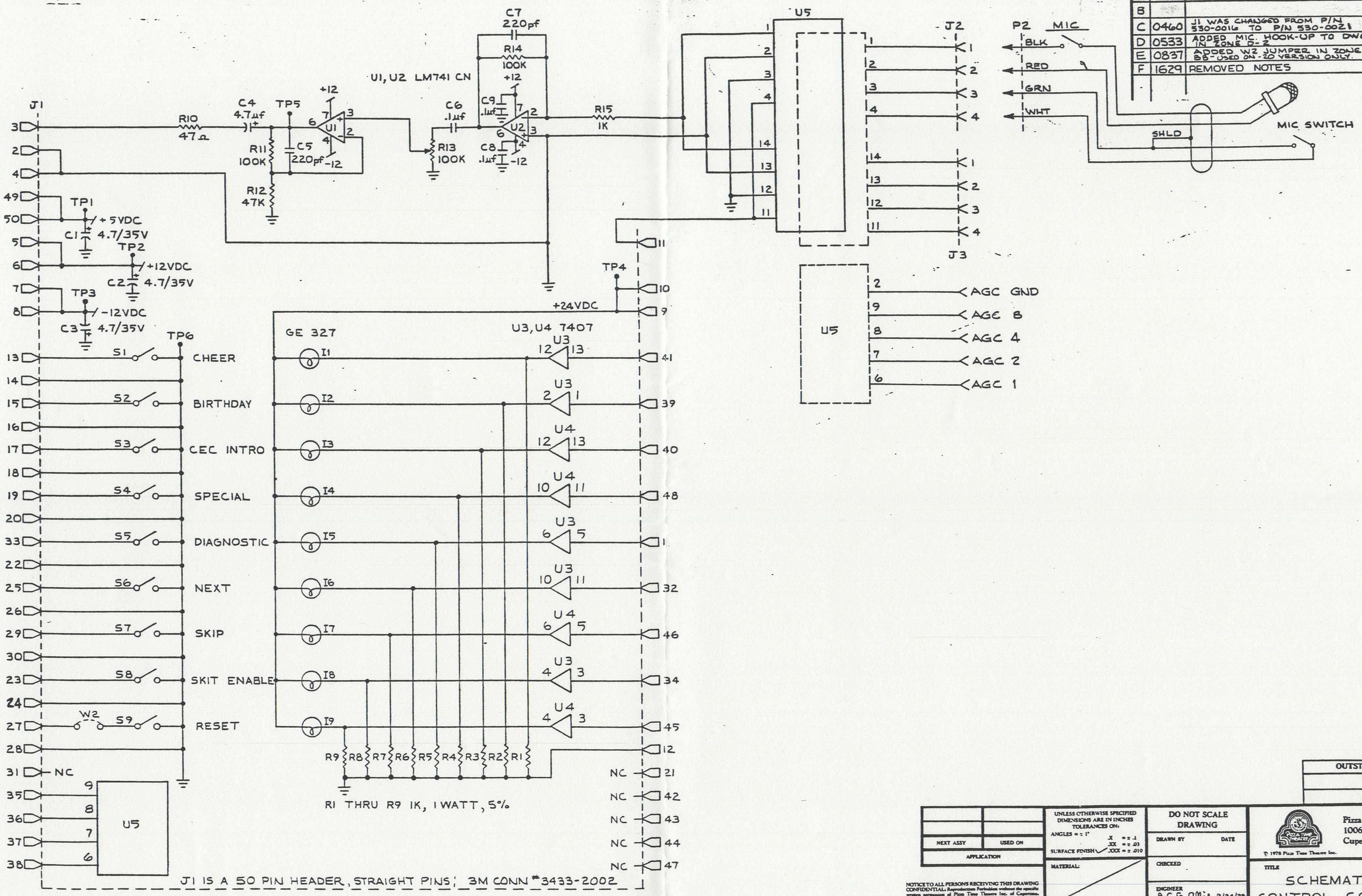
U1, U2 LM741 CN
J1
R10 47Ω
C4 4.7µf
TP5
+12
U1
-12
R11 100K
C5 220pf
R12 47K
C6 .1µf
R13 100K
C7 220pf
R14 100K
C9 .1µf
C8 .1µf
U2
R15 1K
U5
J2
J3
P2 MIC
BLK
RED
GRN
WHT
SHLD
MIC SWITCH
TP1 +5VDC
C1 4.7/35V
TP2 +12VDC
C2 4.7/35V
TP3 -12VDC
C3 4.7/35V
TP4
+24VDC
TP6
GE 327
U3, U4 7407
S1 CHEER
S2 BIRTHDAY
S3 CEC INTRO
S4 SPECIAL
S5 DIAGNOSTIC
S6 NEXT
S7 SKIP
S8 SKIT ENABLE
W2 S9 RESET
I1
I2
I3
I4
I5
I6
I7
I8
I9
R9 R8 R7 R6 R5 R4 R3 R2 R1
R1 THRU R9 1K, 1 WATT, 5%
NC
AGC GND
AGC 8
AGC 4
AGC 2
AGC 1
J1 IS A 50 PIN HEADER, STRAIGHT PINS; 3M CONN #3433-2002

OUTSTANDING ECNs

NEXT ASSY	USED ON
APPLICATION	

UNLESS OTHERWISE SPECIFIED DIMENSIONS ARE IN INCHES TOLERANCES ON:
ANGLES = ± 1°
.X = ± .1
.XX = ± .03
.XXX = ± .010
SURFACE FINISH ✓
MATERIAL:
FINISH:

DO NOT SCALE DRAWING
DRAWN BY
DATE
CHECKED
ENGINEER A.G.G Alfie 9/24/79
PROJECT ENGINEER
MFG ENGINEER

Pizza Time Theatre Inc.
10060 Bubb Road
Cupertino, CA 95014

© 1978 Pizza Time Theatre Inc.

TITLE
SCHEMATIC
CONTROL CONSOLE

SIZE D
DRAWING NO. 008-0007-01
REV F
SCALE NONE
SHEET 1 OF 1

NOTICE TO ALL PERSONS RECEIVING THIS DRAWING CONFIDENTIAL: Reproduction Forbidden without the specific written permission of Pizza Time Theatre Inc. of Cupertino, California. This drawing is only conditionally issued, and neither receipt nor possession thereof confers or transfers any right in, or license to use, the subject matter of the drawing or any design or technical information shown thereon, nor any right to reproduce this drawing or any part thereof, except for manufacture by vendors for Pizza Time Theatre Inc. and for manufacture under the corporation's written license, no right to reproduce this drawing is granted or the subject matter thereof unless by written agreement with or written permission from the corporation.

BISHOP GRAPHICS-ACCUPRESS REORDER NO. A-5407

SYM	ECO NO.	REVISIONS DESCRIPTION	DATE	APPROVED
A	1208	PRODUCTION RELEASE	4/15/82	CJ

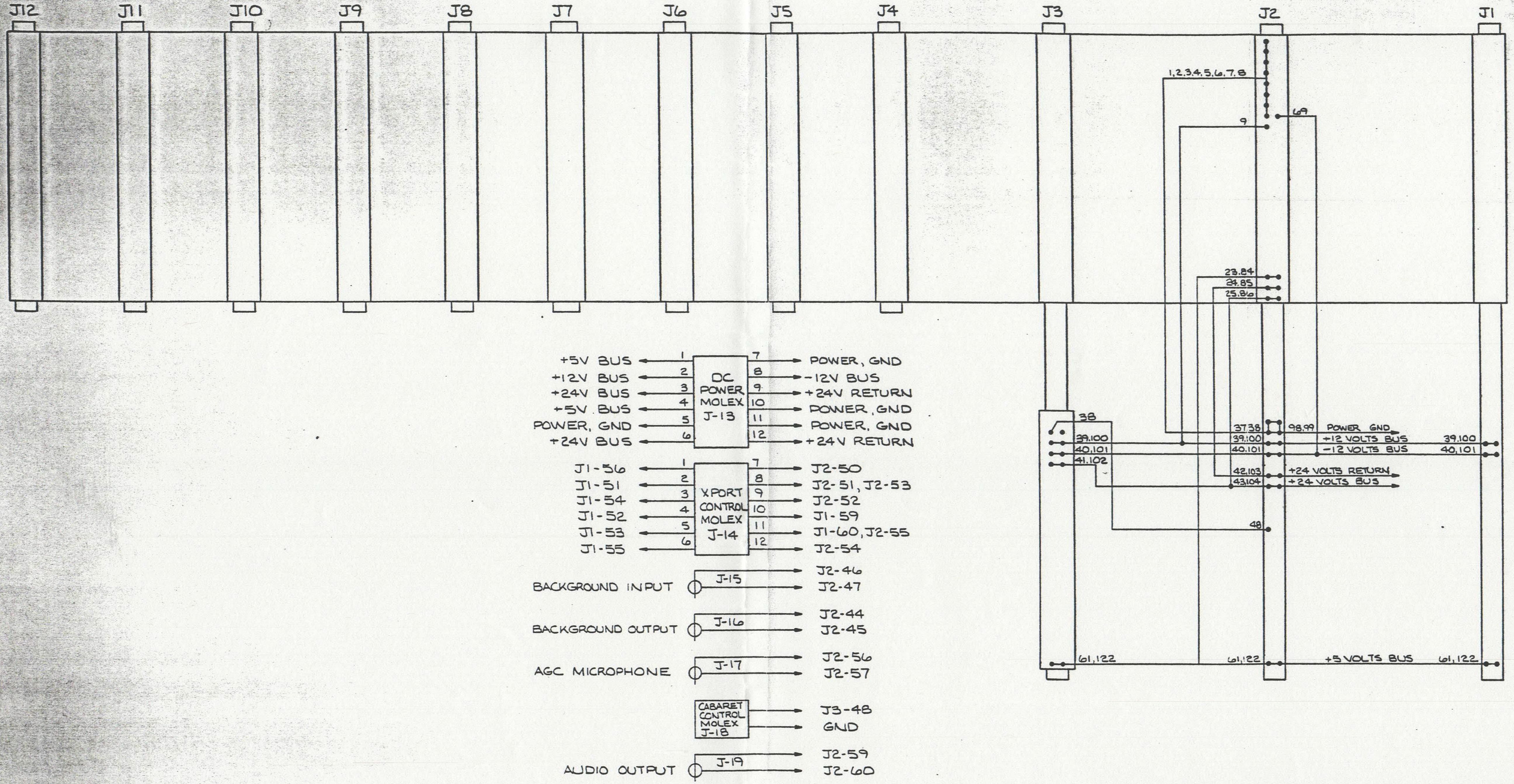
J12
J11
J10
J9
J8
J7
J6
J5
J4
J3
J2
J1
1,2,3,4,5,6,7,8
9
69
23.84
24.85
25.86
38
39.100
40.101
41.102
37.38
39.100
40.101
98.99
POWER GND
+12 VOLTS BUS
−12 VOLTS BUS
39.100
40.101
42.103
43.104
+24 VOLTS RETURN
+24 VOLTS BUS
48
61,122
61,122
+5 VOLTS BUS
61,122
+5V BUS
+12V BUS
+24V BUS
+5V BUS
POWER, GND
+24V BUS
DC POWER MOLEX J-13
1
2
3
4
5
6
7
8
9
10
11
12
POWER, GND
-12V BUS
+24V RETURN
POWER, GND
POWER, GND
+24V RETURN
J1-56
J1-51
J1-54
J1-52
J1-53
J1-55
XPORT CONTROL MOLEX J-14
J2-50
J2-51, J2-53
J2-52
J1-59
J1-60, J2-55
J2-54
BACKGROUND INPUT
J-15
J2-46
J2-47
BACKGROUND OUTPUT
J-16
J2-44
J2-45
AGC MICROPHONE
J-17
J2-56
J2-57
CABARET CONTROL MOLEX J-18
J3-48
GND
AUDIO OUTPUT
J-19
J2-59
J2-60

OUTSTANDING ECNs	

NEXT ASSY	USED ON

APPLICATION

UNLESS OTHERWISE SPECIFIED DIMENSIONS ARE IN INCHES
TOLERANCES ON:
ANGLES = ± 1°
.X = ± .1
.XX = ± .03
.XXX = ± .010
SURFACE FINISH ✓

MATERIAL:

FINISH:

NOTICE TO ALL PERSONS RECEIVING THIS DRAWING CONFIDENTIAL: Reproduction Forbidden without the specific written permission of Pizza Time Theatre Inc. of Sunnyvale, California. This drawing is only conditionally issued, and neither receipt nor possession thereof confers or transfers any right in, or license to use, the subject matter of the drawing or any design or technical information shown thereon, nor any right to reproduce this drawing or any part thereof, except for manufacture by vendors for Pizza Time Theatre Inc. and for manufacture under the corporation's written license, no right to reproduce this drawing is granted or the subject matter thereof unless by written agreement with or written permission from the corporation.

DO NOT SCALE DRAWING

DRAWN BY L FORTE DATE 4/14/82
CHECKED C JORGENSEN 4/15/82
ENGINEER
PROJECT ENGINEER
MFG ENGINEER C JORGENSEN 4/15/82

Chuck E. Cheese's Pizza Time Theatre

Pizza Time Theatre Inc.
1213 Innsbruck Dr.
Sunnyvale, CA 94086

© 1978 Pizza Time Theatre Inc.

TITLE
BACKPLANE - SCHEMATIC

SIZE D
DRAWING NO. 08-0032
REV A
SCALE NONE
SHEET 1 OF 1

SYM	ECO NO.	REVISIONS DESCRIPTION	DATE	APPROVED
A	0629	RELEASE TO PRODUCTION	11/13/80	JH

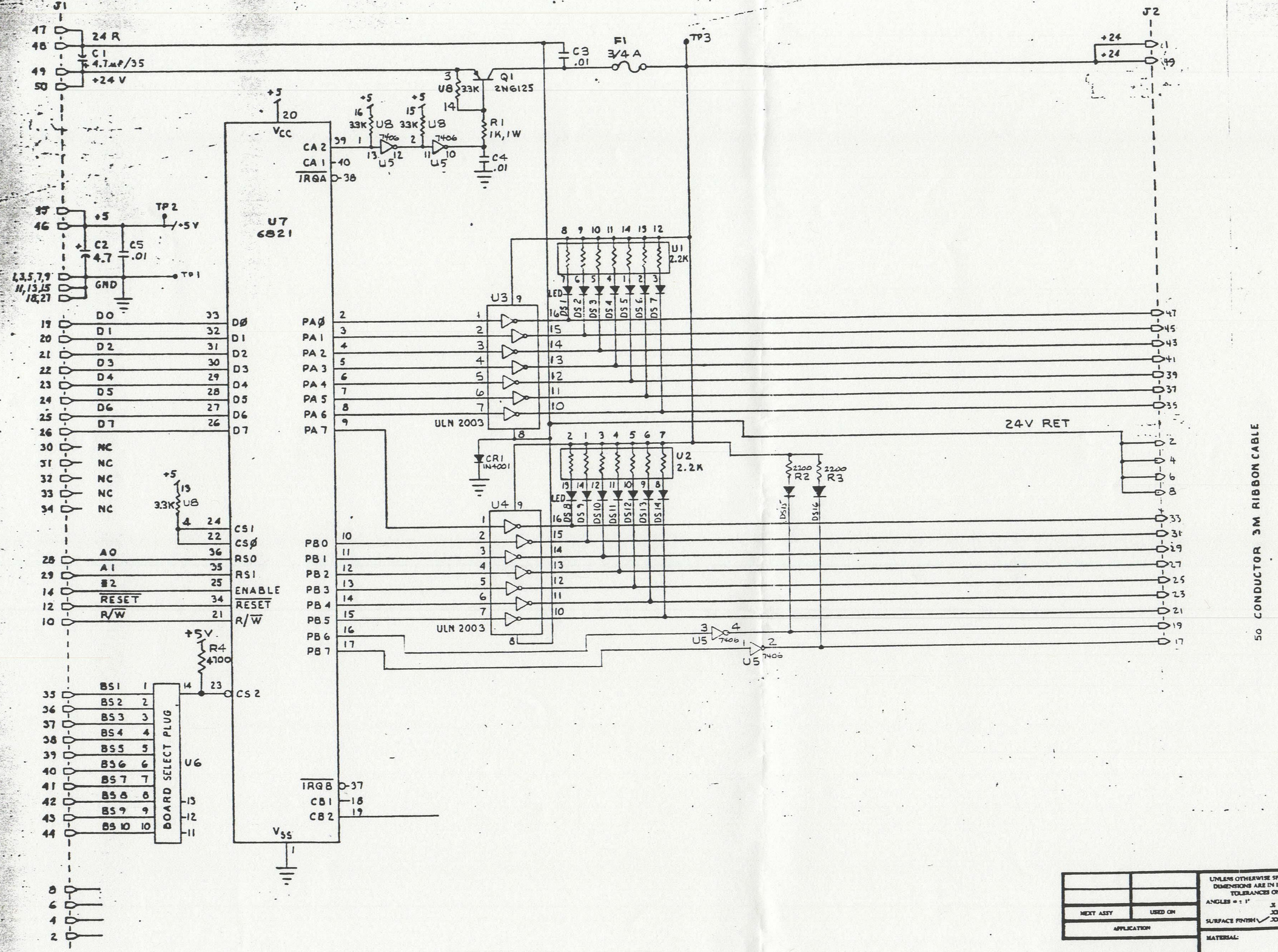
J1
47 48 49 50
24 R
C1 4.7 µF/35
+24 V
45 46
+5
TP2 +5V
C2 4.7
C5 .01
1,3,5,7,9 11,13,15 18,27
GND
TP1
D0 D1 D2 D3 D4 D5 D6 D7
NC
A0 A1 Ø2 RESET R/W
BS1 BS2 BS3 BS4 BS5 BS6 BS7 BS8 BS9 BS10
BOARD SELECT PLUG
U6
+5V R4 4700
CS2
+5 13 3.3K U8
U7 6821
VCC
CA2 CA1 IRQA
CS1 CS0 RS0 RS1 ENABLE RESET R/W
PA0 PA1 PA2 PA3 PA4 PA5 PA6 PA7
PB0 PB1 PB2 PB3 PB4 PB5 PB6 PB7
IRQB CB1 CB2
VSS
U8 33K
U5 7406
Q1 2N6125
R1 1K, 1W
C4 .01
C3 .01
F1 3/4 A
TP3
U1 2.2K
U2 2.2K
LED
DS1 DS2 DS3 DS4 DS5 DS6 DS7
DS8 DS9 DS10 DS11 DS12 DS13 DS14
U3 ULN 2003
U4 ULN 2003
CR1 1N4001
R2 2200
R3 2200
DS15 DS16
J2
+24
24V RET
50 CONDUCTOR 3M RIBBON CABLE

NEXT ASSY	USED ON
APPLICATION	

UNLESS OTHERWISE SPECIFIED DIMENSIONS ARE IN INCHES TOLERANCES ON:
ANGLES = ± 1°
.X = ± .1
.XX = ± .03
.XXX = ± .010
SURFACE FINISH ✓

MATERIAL:

FINISH:

NOTICE TO ALL PERSONS RECEIVING THIS DRAWING CONFIDENTIAL: Reproduction Forbidden without the specific written permission of Pizza Time Theatre Inc. of Cupertino, California. This drawing is only conditionally issued, and neither receipt nor possession thereof confers or transfers any right in, or license to use, the subject matter of the drawing or any design or technical information shown thereon, nor any right to reproduce this drawing or any part thereof, except for manufacture by vendors for Pizza Time Theatre Inc. and for manufacture under the corporation's written license, no right to reproduce this drawing is granted or the subject matter thereof unless by written agreement with or written permission from the corporation.

DO NOT SCALE DRAWING

DRAWN BY Rus 6-10-80
CHECKED
ENGINEER JH 11/13/80
PROJECT ENGINEER
MFG ENGINEER

Pizza Time Theatre Inc.
10060 Bubb Road
Cupertino, CA 95014

© 1978 Pizza Time Theatre Inc.

TITLE SCHEMATIC LIGHT DRIVER

SIZE D
DRAWING NO. 08-0021
REV A
SCALE
SHEET 1 OF 1

OUTSTANDING ECNs

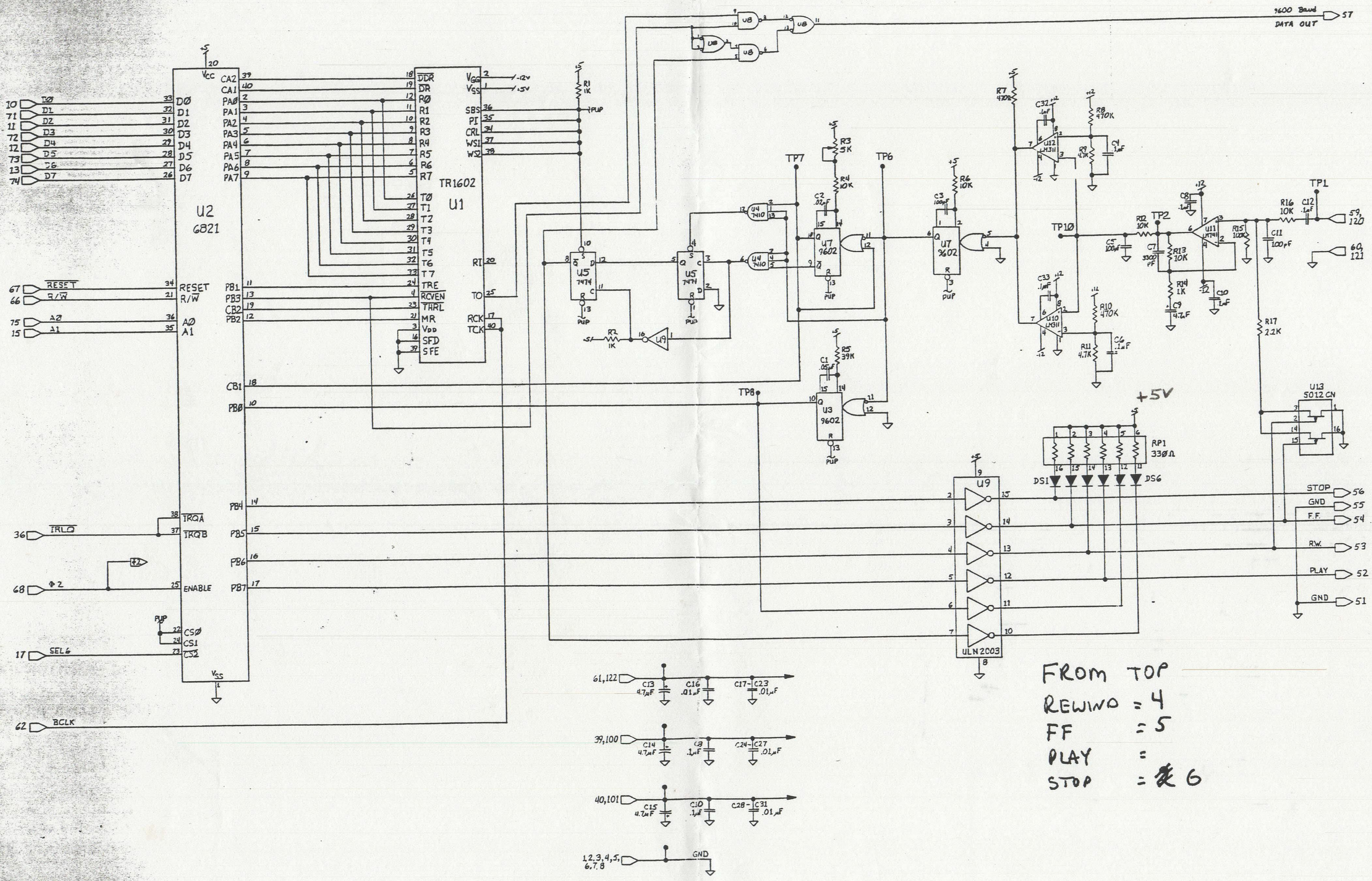
U2
6821
U1
TR1602
U3
9602
U4
7410
U5
7474
U7
9602
U8
U9
ULN2003
U10
LM311
U11
LM741
U12
LM311
U13
5012 CN
RP1
330Ω
DS1
DS6
TP1
TP2
TP6
TP7
TP8
TP10
+5V
9600 Baud
DATA OUT
57
STOP
56
GND
55
F.F.
54
R.W.
53
PLAY
52
GND
51
59, 120
60, 121
RESET
R/W
IRLQ
Φ2
SEL6
BCLK
61,122
39,100
40,101
1,2,3,4,5, 6,7,8
GND

FROM TOP
REWIND = 4
FF = 5
PLAY =
STOP = ~~6~~ 6

Pizza Time Theatre Inc.
1213 Innsbruck Dr.
Sunnyvale, CA 94086

Chuck E. Cheese's Pizza Time Theatre

REVISIONS

DATE 7-21-82
DRAWN BY B. Van Dyck
APPROVED
SCALE

TITLE TRANSPORT CONTROL MODULE MASTER

SHEET
OF

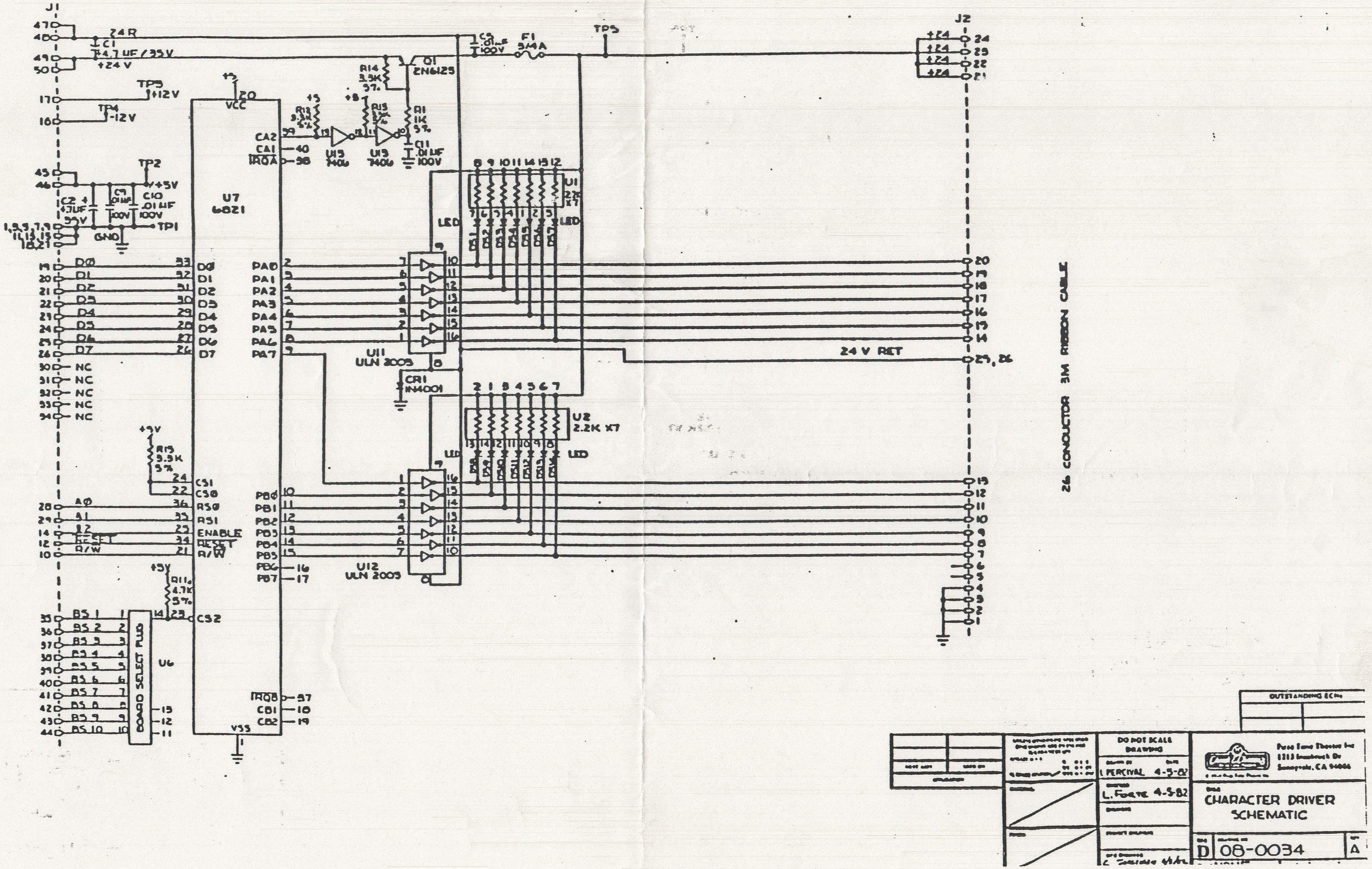
J1
J2
47
48
49
50
24 R
C1
4.7 UF / 35V
+24 V
17
16
TP3
+12V
TP4
-12V
45
46
TP2
+5V
C2
4.7UF
35V
C9
.01 UF
100V
C10
.01 UF
100V
GND
TP1
1,3,5,7,9
11,13,15
18,21
D0
D1
D2
D3
D4
D5
D6
D7
NC
U7
6821
VCC
CA2
CA1
IRQA
PA0
PA1
PA2
PA3
PA4
PA5
PA6
PA7
PB0
PB1
PB2
PB3
PB4
PB5
PB6
PB7
IRQB
CB1
CB2
VSS
CS1
CS0
CS2
RS0
RS1
ENABLE
RESET
R/W
A0
A1
E2
R15
3.3K
5%
R11
4.7K
5%
BS 1
BS 2
BS 3
BS 4
BS 5
BS 6
BS 7
BS 8
BS 9
BS 10
BOARD SELECT PLUG
U6
R12
3.3K
5%
R13
3.3K
5%
U13
7406
R14
3.3K
5%
Q1
2N6125
R1
1K
5%
C11
.01 UF
100V
C3
.01 UF
100V
F1
3/4A
TP5
U11
ULN 2003
U12
ULN 2003
CR1
1N4001
U1
2.2K X7
U2
2.2K X7
LED
DS1
DS2
DS3
DS4
DS5
DS6
DS7
DS8
DS9
DS10
DS11
DS12
DS13
+24
24 V RET
25, 26
26 CONDUCTOR 3M RIBBON CABLE
OUTSTANDING ECNs
DO NOT SCALE DRAWING
L. PERCIVAL 4-5-82
L. FORTE 4-5-82
Pizza Time Theatre Inc
1213 Innsbruck Dr
Sunnyvale, CA 94089
CHARACTER DRIVER
SCHEMATIC
D
08-0034
A

CHUCK E. CHEESE

CYBERSTAR®

MANUAL

©1990 ShowBiz Pizza Time, Inc. Any reproduction of this manual is prohibited without the express written consent of ShowBiz Pizza Time, Inc., Irving, TX.

BEAGLES OR BEACH BOWZERS MAP

SOL#	TB1#	1 GEORGE FRONT LEFT HEADER 1 to 14	2 JOHN FRONT RIGHT HEADER 2 to 14	3 PAUL REAR LEFT HEADER 3 to 14	4 RINGO REAR RIGHT HEADER 4 to 14
L1	1&2	MOUTH	MOUTH	MOUTH	MOUTH
L2	3&4	BODY	BODY	BODY	BODY
L3	5&6	HEAD RIGHT	HEAD RIGHT	HEAD RIGHT	
L4	7&8	HEAD LEFT	HEAD LEFT	HEAD LEFT	
L5	9&10	HAND	MIKE		LEFT HAND
L6	11&12		FOOT		RIGHT HAND
L7	13&14				
L8	15&16				

TB2#	
1&2	CLEAR SPOT J
3&4	CLEAR SPOT
5&6	
7&8	
9&10	
11&12	

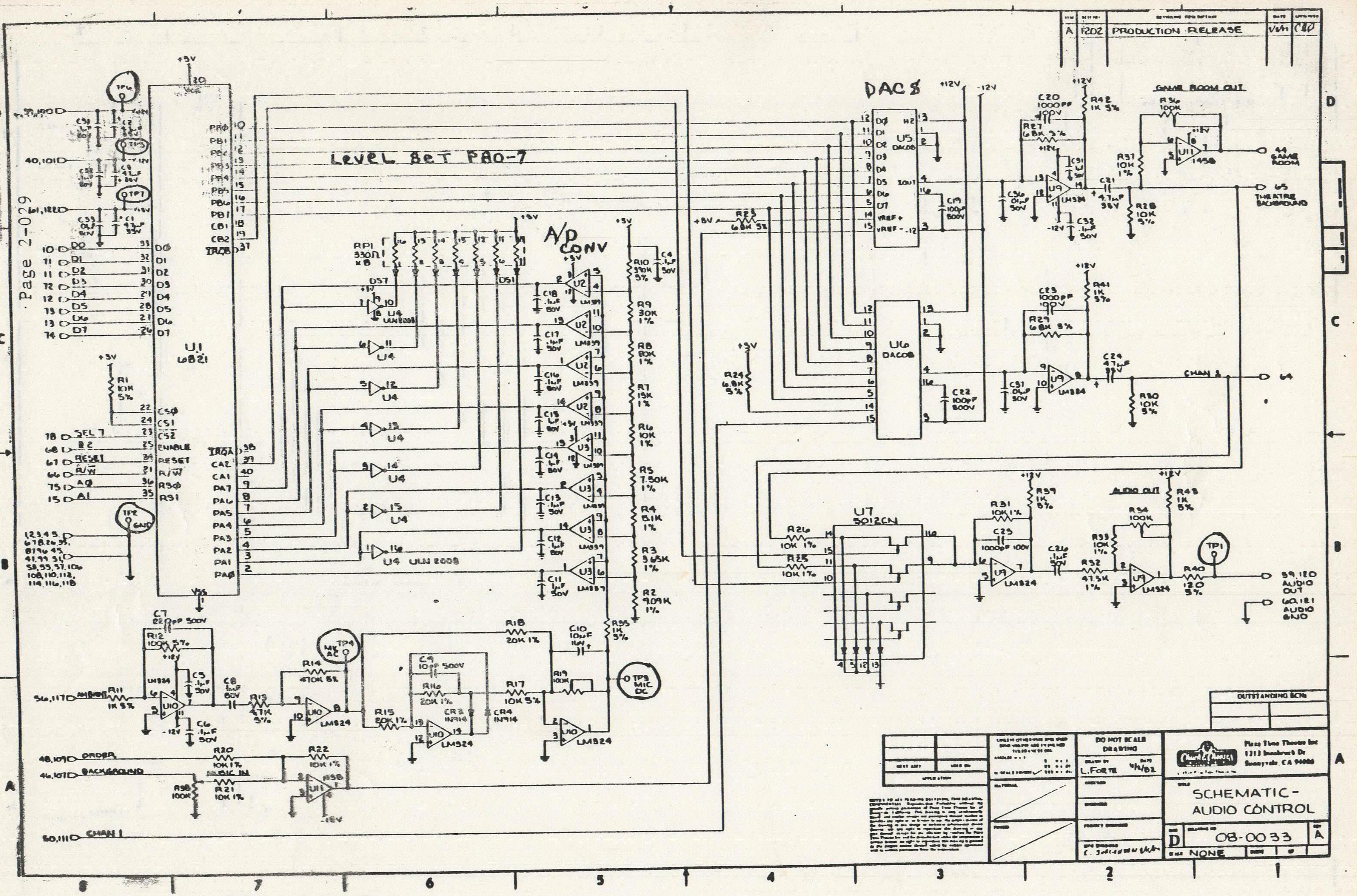
A | 1202 | PRODUCTION RELEASE
LEVEL SET PB0-7
A/D CONV
DAC 8
U1 6821
U5 DAC08
U6 DAC08
U7 5012CN
U2 LM339
U3 LM339
U4 ULN 2003
U9 LM324
U10 LM324
U11 1458
GAME ROOM OUT
44 GAME ROOM
65 THEATRE BACKGROUND
CHAN 1
64
AUDIO OUT
59,120 AUDIO OUT
60,121 AUDIO GND
TP1
TP2 GND
TP3 MIC DC
TP4 MIC AC
TP5
TP6
TP7
AMBIENT
ORDER
BACKGROUND
MUSIC IN
CHAN 1
SEL 7
RESET
R/W
A0
A1
ENABLE
OUTSTANDING ECNs
DO NOT SCALE DRAWING
L. FORTE 4/2/82
Pizza Time Theatre Inc
1213 Innsbruck Dr
Sunnyvale, CA 94086
SCHEMATIC - AUDIO CONTROL
D
08-0033
A
NONE

6821 - P1A

LM324 - Quad Amp

1458 - Dual Amp

LM339 - Quad Comp'r

ULN 2003 - Hi-Volt Driver

5012CN Quad Fet Switch

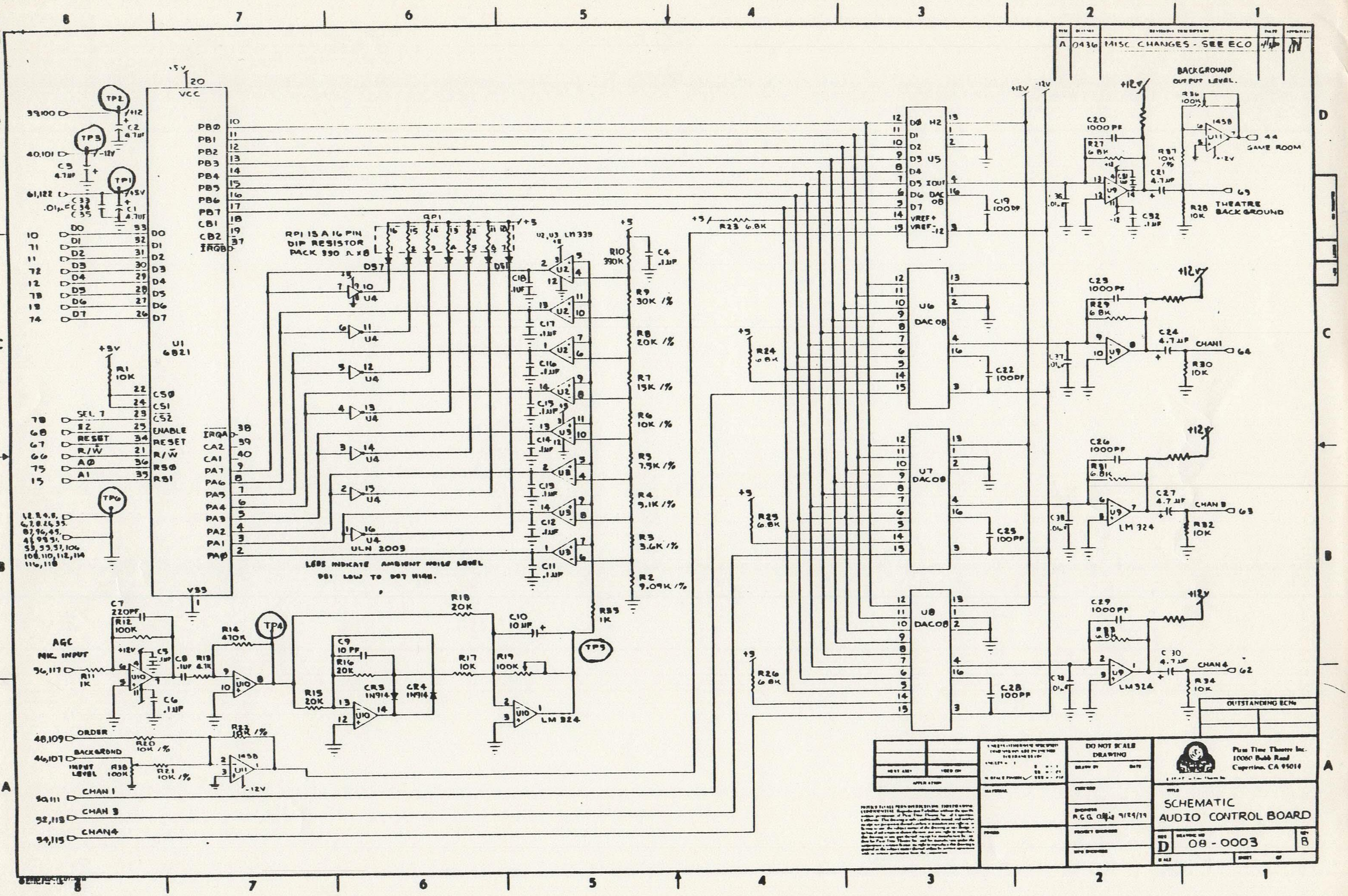
A
0436
MISC CHANGES - SEE ECO
U1
6821
VCC
+5V
PB0
PB1
PB2
PB3
PB4
PB5
PB6
PB7
CB1
CB2
IRQB
CS0
CS1
CS2
ENABLE
RESET
R/W
RS0
RS1
IRQA
CA2
CA1
PA7
PA6
PA5
PA4
PA3
PA2
PA1
PA0
VSS
D0
D1
D2
D3
D4
D5
D6
D7
SEL 7
Φ2
A0
A1
TP1
TP2
TP3
TP4
TP5
TP6
RP1
RP1 IS A 16 PIN DIP RESISTOR PACK 390 Ω x 8
DS7
DS1
U4
ULN 2003
U2, U3 LM 339
LEDS INDICATE AMBIENT NOISE LEVEL DS1 LOW TO DS7 HIGH.
R10 390K
R9 30K 1%
R8 20K 1%
R7 15K 1%
R6 10K 1%
R5 7.5K 1%
R4 5.1K 1%
R3 3.6K 1%
R2 9.09K 1%
R35 1K
AGC
MIC. INPUT
R11 1K
U10
LM 324
C7 220PF
R12 100K
R13 4.7K
R14 470K
R15 20K
R16 20K
R17 10K
R18 20K
R19 100K
C9 10 PF
CR3 1N914
CR4 1N914
C10 10 UF
ORDER
BACKGROND
INPUT LEVEL
R20 10K 1%
R21 10K 1%
R22 10K 1%
R38 100K
1458
U11
CHAN 1
CHAN 3
CHAN4
R23 6.8K
U5
DAC 08
U6 DAC 08
U7 DAC08
U8 DAC08
VREF+
VREF-
IOUT
R24 6.8K
R25 6.8K
R26 6.8K
C19 100PF
C22 100PF
C25 100PF
C28 100PF
U9
BACKGROUND OUTPUT LEVEL.
R36 100K
GAME ROOM
THEATRE BACKGROUND
C20 1000 PF
R27 6.8K
C21 4.7 UF
R37 10K 1%
R28 10K
C23 1000 PF
R29 6.8K
C24 4.7 UF
R30 10K
CHAN1
C26 1000PF
R31 6.8K
C27 4.7 UF
R32 10K
CHAN 3
C29 1000PF
R33 6.8K
C30 4.7 UF
R34 10K
CHAN 4
+12V
-12V
OUTSTANDING ECNs

DO NOT SCALE DRAWING

Pizza Time Theatre Inc.
10060 Bubb Road
Cupertino, CA 95014

A.G.G. 9/29/79

SCHEMATIC
AUDIO CONTROL BOARD

D 08 - 0003 B

CHARACTER DRIVER			
1		2	0/
3		4	.2/
5		6	"/
7		8	0/
9		10	3/
11		12	4.3/
13		14	1.9/
15	↓	16	-12/
17	12✓/	18	0/
19	1.8/	20	1.9/2.6
21	2.2/	22	2.3/
23	2.4/	24	1.6/✓
25	1.6/	26	"/1.3
27	0/	28	"/✓
29	1.9/	30	1.7/
31	1.8/	32	4.8/5
33	4.9/	34	"/
35	4.9/	36	5/
37	"/	38	"/
39	4.6/	40	4.6/
41	"/	42	"/
43	"/	44	"/
45	5/	46	5/
47	0/	48	0/
49	24/	50	24/

SAME!

PROCESSOR							
1	0	32	0	63	0	94	12
2	0	33	0	64	0	95	5
3	0	34	5	65	0	96	0
4	0	35	12	66	3.2	97	10
5	0	36	0	67	5	98	10
6	0	37	0	68	1.6	99	9
7	0	38	0	69	-12	100	12
8	0	39	12	70	0	101	-12
9	12	40	-12	71	2.1	102	24
10	1.9	41	24	72	2.5	103	0
11	2.5	42	5	73	1.6	104	0
12	2.1	43	5	74	1.6	105	0
13	1.6	44	5	75	1.6	106	0
14	0	45	5	76	1.7	107	0
15	1.9	46	5	77	5	108	0
16	1.7	47	0	78	5	109	0
17	5	48	5	79	5	110	0
18	5	49	5	80	5	111	0
19	5	50	5	81	5	112	0
20	5	51	5	82	5	113	3.5
21	5	52	0	83	5	114	3.3
22	5	53	5	84	5	115	5
23	5	54	5	85	0	116	5
24	0	55	5	86	24	117	5
25	24	56	0	87	0	118	0
26	12	57	0	88	1.7	119	0
27	1.4	58	0	89	"	120	0 0
28	1.5	59	0	90	2	121	0 0
29	2.2	60	0	91	"	122	5
30	2.8	61	5	92	0		
31	2.8	62	0	93	0		

SAME!

SYM	ECO NO.	REVISIONS DESCRIPTION	DATE	APPROVED
B	0808	SHORTED T1 PINS 2 TO 3 ANG 6 TO 7.	6/26/81	RH

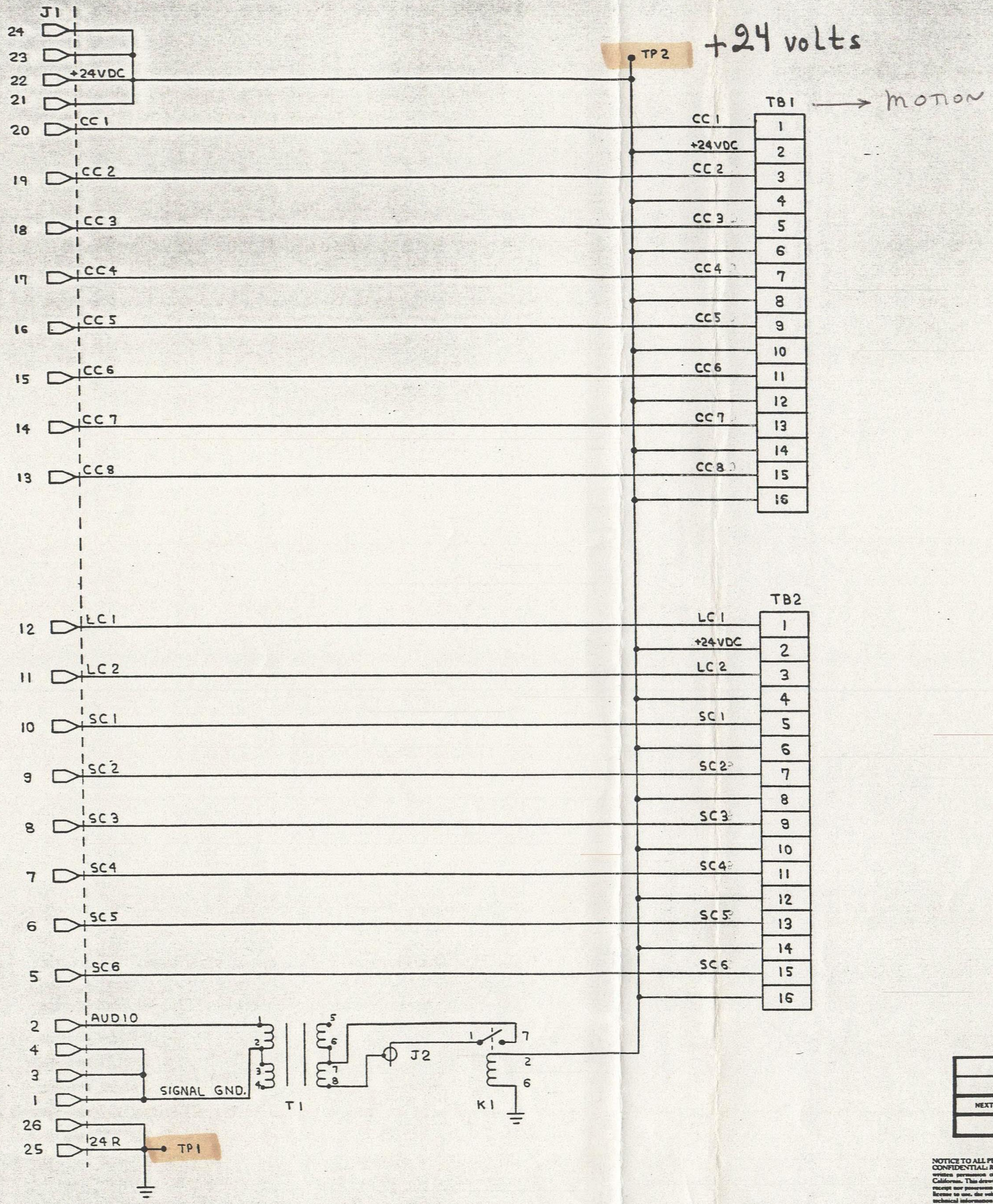
J1
24
23
22
21
+24VDC
20 CC1
19 CC2
18 CC3
17 CC4
16 CC5
15 CC6
14 CC7
13 CC8
TP2
+24 volts
TB1
MOTION
CC1 1
+24VDC 2
CC2 3
4
CC3 5
6
CC4 7
8
CC5 9
10
CC6 11
12
CC7 13
14
CC8 15
16
12 LC1
11 LC2
10 SC1
9 SC2
8 SC3
7 SC4
6 SC5
5 SC6
TB2
LC1 1
+24VDC 2
LC2 3
4
SC1 5
6
SC2 7
8
SC3 9
10
SC4 11
12
SC5 13
14
SC6 15
16
2 AUDIO
4
3
1
SIGNAL GND.
26
25 24R
TP1
T1
1 2 3 4 5 6 7 8
J2
K1
1 7 2 6

OUTSTANDING ECNs

NEXT ASSY	USED ON
APPLICATION	

UNLESS OTHERWISE SPECIFIED
DIMENSIONS ARE IN INCHES
TOLERANCES ON:
ANGLES = ± 1°
.X = ± .1
.XX = ± .03
SURFACE FINISH ✓ .XXX = ± .010

MATERIAL:

FINISH:

DO NOT SCALE DRAWING

DRAWN BY
DATE

CHECKED

ENGINEER
A.G.G. Aggie 9/24/79

PROJECT ENGINEER

MFG ENGINEER

Pizza Time Theatre Inc.
10060 Bubb Road
Cupertino, CA 95014

© 1978 Pizza Time Theatre Inc.

TITLE
SCHEMATIC
SOLENOID BOARD

SIZE D
DRAWING NO. 08-0005
REV B
SCALE NONE
SHEET 1 OF 1

NOTICE TO ALL PERSONS RECEIVING THIS DRAWING CONFIDENTIAL: Reproduction Forbidden without the specific written permission of Pizza Time Theatre Inc. of Cupertino, California. This drawing is only conditionally issued, and neither receipt nor possession thereof confers or transfers any right in, or license to use, the subject matter of the drawing or any design or technical information shown thereon, nor any right to reproduce this drawing or any part thereof, except for manufacture by vendors for Pizza Time Theatre Inc. and for manufacture under the corporation's written license, no right to reproduce this drawing is granted or the subject matter thereof unless by written agreement with or written permission from the corporation.

SYM	ECO NO.	REVISIONS DESCRIPTION	DATE	APPROVED
A	0629	RELEASE TO PRODUCTION	11/13/80	JH

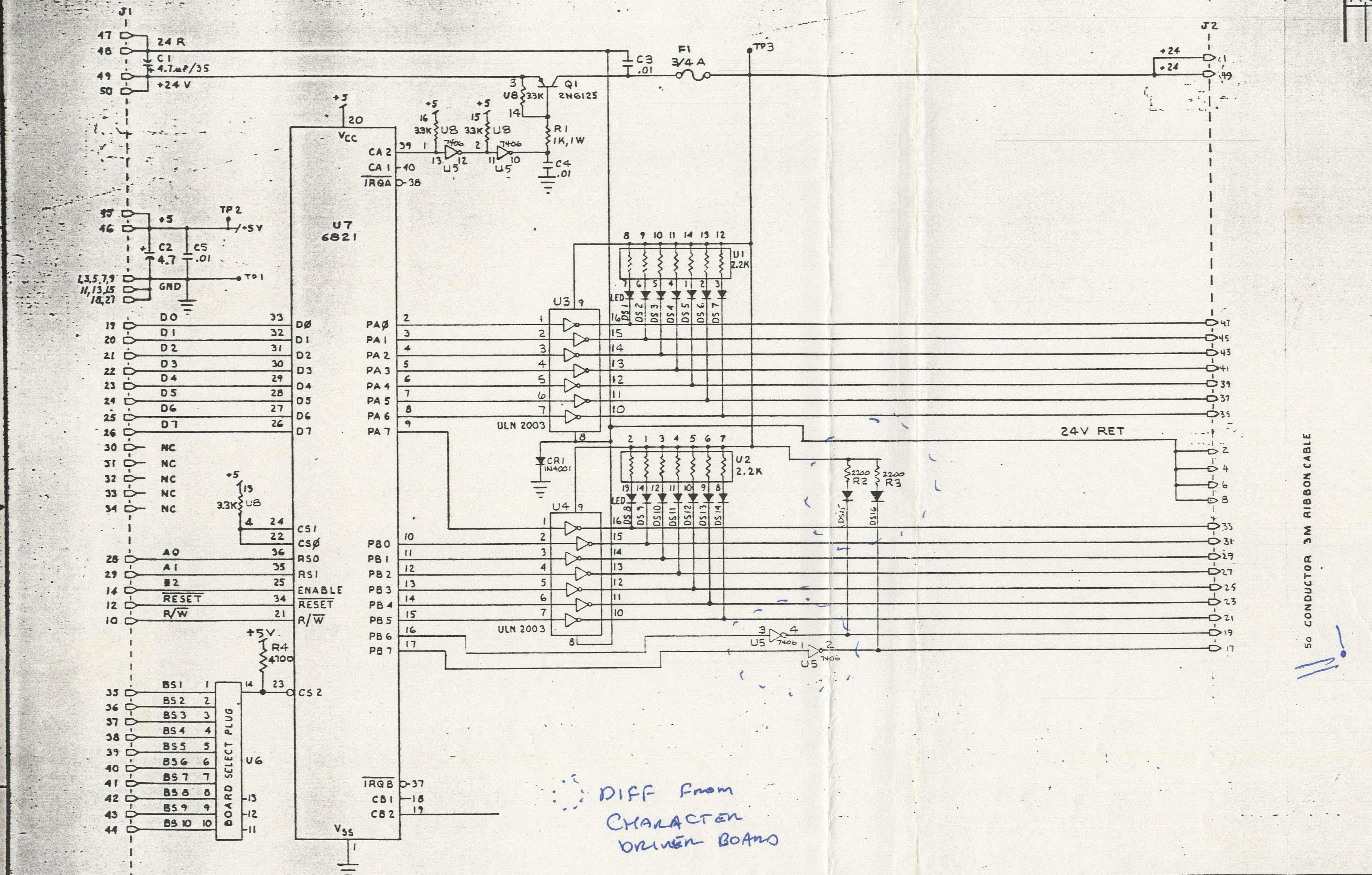

J1
24 R
C1 4.7 μF/35
+24 V
C3 .01
F1 3/4 A
TP3
J2
+24
Q1 2N6125
U8 33K
R1 1K, 1W
C4 .01
+5
Vcc
CA 2
CA 1
IRQA
U5 7406
U8
TP2
+5V
C2 4.7
C5 .01
GND
TP1
U7 6821
D0 D1 D2 D3 D4 D5 D6 D7
NC
U1 2.2K
U3 ULN 2003
U4 ULN 2003
LED
DS 1 DS 2 DS 3 DS 4 DS 5 DS 6 DS 7
DS 8 DS 9 DS 10 DS 11 DS 12 DS 13 DS 14
DS 15 DS 16
R2 2200 R3 2200
U2 2.2K
CR1 1N4001
24V RET
PA0 PA1 PA2 PA3 PA4 PA5 PA6 PA7
PB0 PB1 PB2 PB3 PB4 PB5 PB6 PB7
CS1 CS0 RS0 RS1 ENABLE RESET R/W
CS 2
A0 A1 Ø2 RESET R/W
3.3K U8
+5V R4 4700
BS1 BS2 BS3 BS4 BS5 BS6 BS7 BS8 BS9 BS10
BOARD SELECT PLUG U6
IRQB CB1 CB2
VSS
50 CONDUCTOR 3M RIBBON CABLE

DIFF from CHARACTER DRIVER BOARD

OUTSTANDING ECNs

NEXT ASSY	USED ON
APPLICATION	

UNLESS OTHERWISE SPECIFIED DIMENSIONS ARE IN INCHES TOLERANCES ON:
ANGLES = ± 1°
.X = ± .1
.XX = ± .03
SURFACE FINISH ✓ .XXX = ± .010

MATERIAL:

FINISH:

DO NOT SCALE DRAWING

DRAWN BY Rus 2 DATE 6.10.80

CHECKED

ENGINEER JH 11/13/80

PROJECT ENGINEER

MFG ENGINEER

Pizza Time Theatre Inc.
10060 Bubb Road
Cupertino, CA 95014

© 1978 Pizza Time Theatre Inc.

TITLE SCHEMATIC - LIGHT DRIVER

SIZE D DRAWING NO. 08-0021 REV A

SCALE SHEET 1 OF 1

NOTICE TO ALL PERSONS RECEIVING THIS DRAWING CONFIDENTIAL: Reproduction Forbidden without the specific written permission of Pizza Time Theatre Inc. of Cupertino, California. This drawing is only conditionally issued, and neither receipt nor possession thereof confers or transfers any right in, or license to use, the subject matter of the drawing or any design or technical information shown thereon, nor any right to reproduce this drawing or any part thereof, except for manufacture by vendors for Pizza Time Theatre Inc. and for manufacture under the corporation's written license, no right to reproduce this drawing is granted or the subject matter thereof unless by written agreement with or written permission from the corporation.

SYM	ECO NO.	REVISIONS DESCRIPTION	DATE	APPROVED
A	1200	PRODUCTION RELEASE	4/5/82	CJ

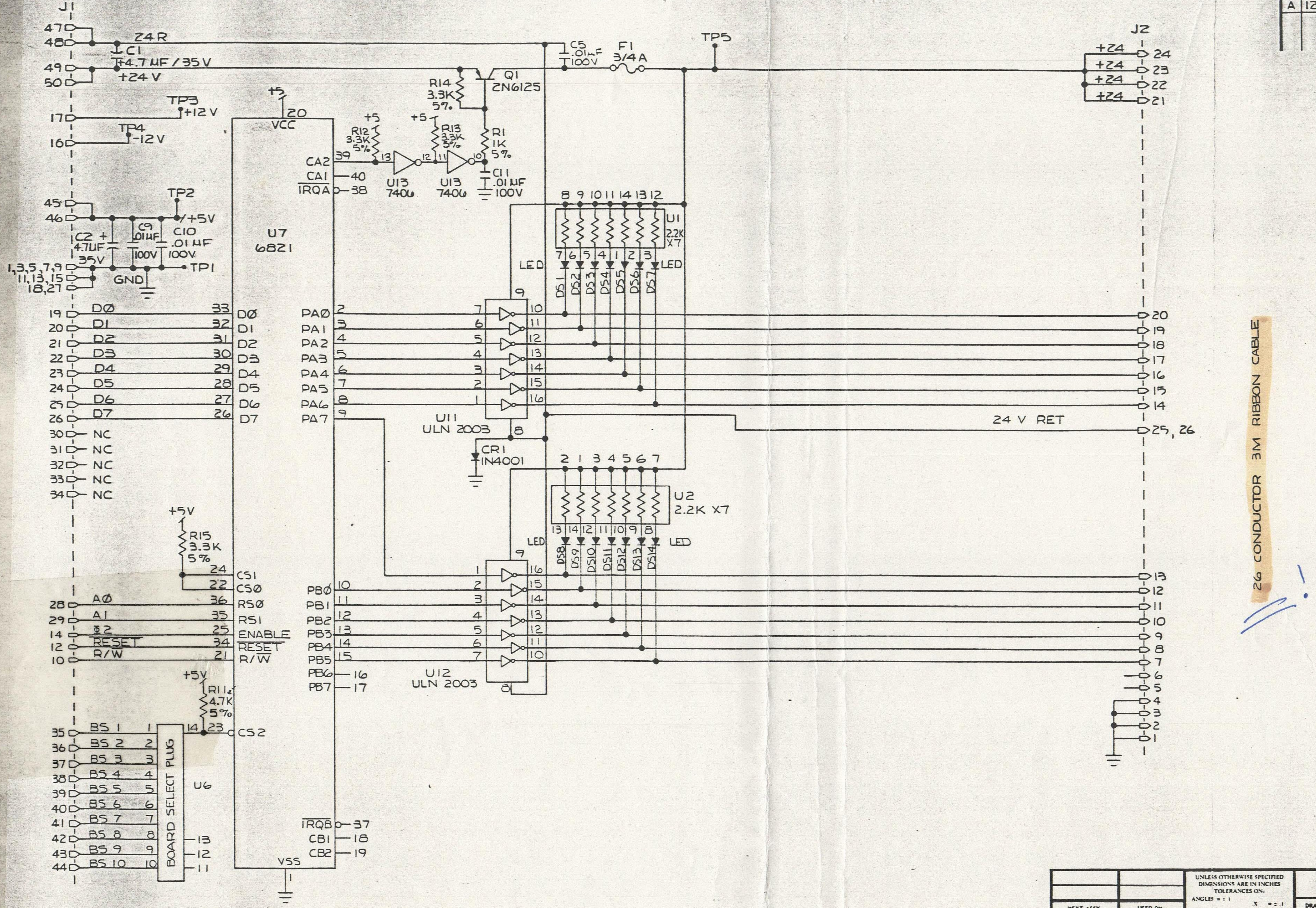
J1
47
48
49
50
24 R
C1
+4.7 UF / 35 V
+24 V
17
16
TP3
+12 V
TP4
-12 V
45
46
TP2
+5V
C2 + 4.7UF 35V
C9 .01UF 100V
C10 .01 UF 100V
GND
TP1
1,3,5,7,9
11,13,15
18,27
19 D0
20 D1
21 D2
22 D3
23 D4
24 D5
25 D6
26 D7
30 NC
31 NC
32 NC
33 NC
34 NC
+5V
R15 3.3K 5%
28 A0
29 A1
14 Φ2
12 RESET
10 R/W
+5V
R11 4.7K 5%
35 BS 1
36 BS 2
37 BS 3
38 BS 4
39 BS 5
40 BS 6
41 BS 7
42 BS 8
43 BS 9
44 BS 10
BOARD SELECT PLUG
U6
+5
20
VCC
U7
6821
CA2 39
CA1 40
IRQA 38
CS1 24
CS0 22
RS0 36
RS1 35
ENABLE 25
RESET 34
R/W 21
CS2 23
PA0 PA1 PA2 PA3 PA4 PA5 PA6 PA7
PB0 PB1 PB2 PB3 PB4 PB5
PB6 16
PB7 17
IRQB 37
CB1 18
CB2 19
VSS
R12 3.3K 5%
+5
U13 7406
R13 3.3K 5%
U13 7406
R14 3.3K 5%
Q1 2N6125
R1 1K 5%
C11 .01 UF 100V
C5 .01 uF 100V
F1 3/4A
TP5
U1 2.2K X7
LED
DS1 DS2 DS3 DS4 DS5 DS6 DS7
U11 ULN 2003
CR1 IN4001
U2 2.2K X7
DS8 DS9 DS10 DS11 DS12 DS13 DS14
U12 ULN 2003
24 V RET
J2
+24 24
+24 23
+24 22
+24 21
20 19 18 17 16 15 14
25, 26
13 12 11 10 9 8 7 6 5 4 3 2 1
26 CONDUCTOR 3M RIBBON CABLE

NEXT ASSY	USED ON
APPLICATION	

UNLESS OTHERWISE SPECIFIED DIMENSIONS ARE IN INCHES TOLERANCES ON:
ANGLES = ± 1
.X = ± .1
.XX = ± .03
.XXX = ± .010
SURFACE FINISH ✓

MATERIAL:

FINISH:

NOTICE TO ALL PERSONS RECEIVING THIS DRAWING CONFIDENTIAL: Reproduction Forbidden without the specific written permission of Pizza Time Theatre Inc. of Sunnyvale, California. This drawing is only conditionally issued, and neither receipt nor possession thereof confers or transfers any right in, or license to use, the subject matter of the drawing or any design or technical information shown thereon, nor any right to reproduce this drawing or any part thereof, except for manufacture by vendors for Pizza Time Theatre Inc. and for manufacture under the corporation's written license, no right to reproduce this drawing is granted or the subject matter thereof unless by written agreement with or written permission from the corporation.

DO NOT SCALE DRAWING

DRAWN BY	DATE
L.PERCIVAL	4-5-82

CHECKED
L. FORTE 4-5-82

ENGINEER

PROJECT ENGINEER

MFG ENGINEER
C JORGENSEN 4/5/82

Chuck E. Cheese's Pizza Time Theatre

c 1978 Pizza Time Theatre Inc.

Pizza Time Theatre Inc.
1213 Innsbruck Dr.
Sunnyvale, CA 94086

TITLE
CHARACTER DRIVER SCHEMATIC

SIZE D
DRAWING NO 08-0034
REV A
SCALE NONE
SHEET 1 OF 1

OUTSTANDING ECNs

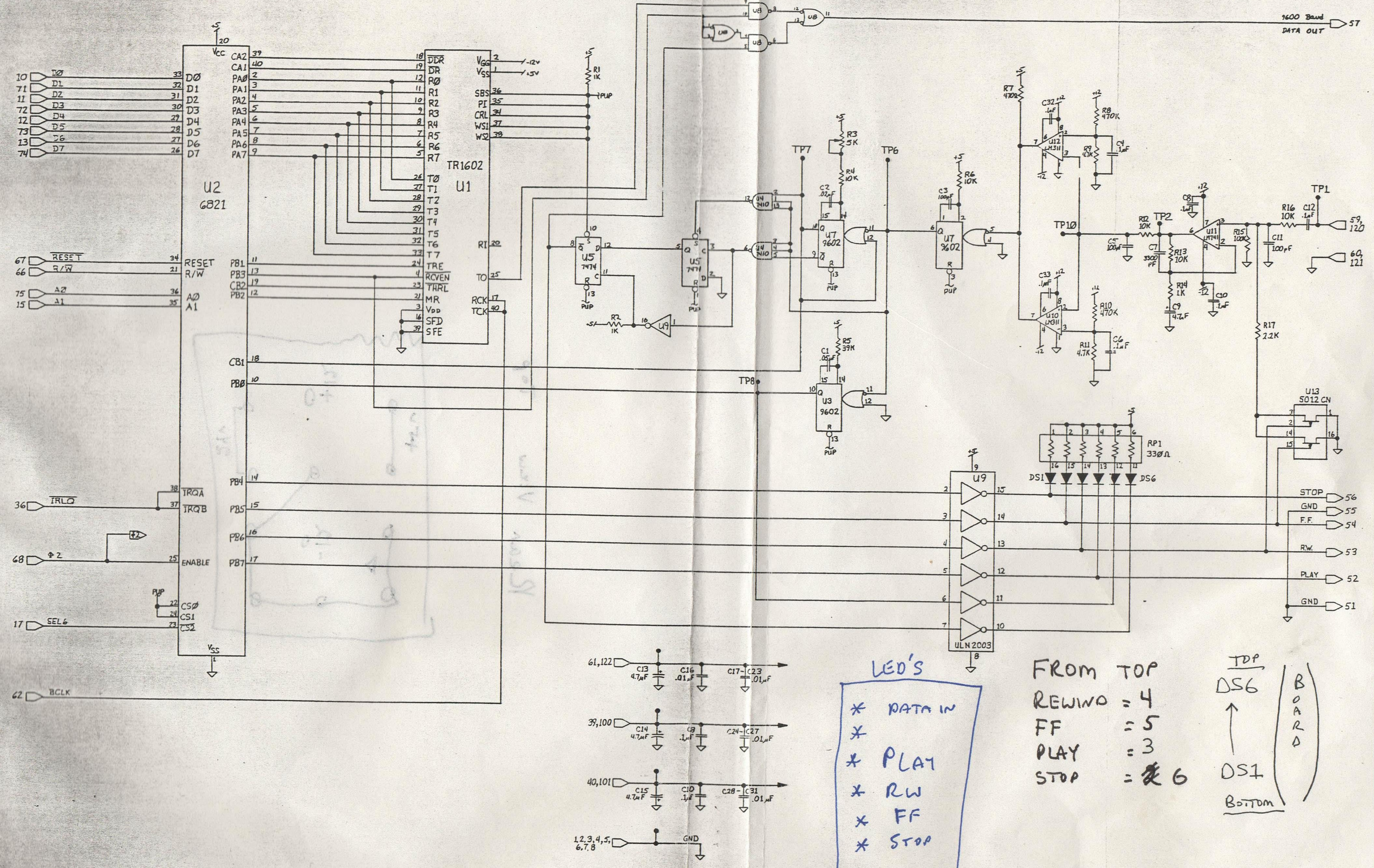
U2
6821
U1
TR1602
D0
D1
D2
D3
D4
D5
D6
D7
RESET
R/W
A0
A1
IRLQ
IRQA
IRQB
Φ2
ENABLE
CS0
CS1
CS2
SEL6
BCLK
VCC
VSS
CA2
CA1
PA0
PA1
PA2
PA3
PA4
PA5
PA6
PA7
PB1
PB3
CB2
PB2
CB1
PB0
PB4
PB5
PB6
PB7
DDR
DR
R0
R1
R2
R3
R4
R5
R6
R7
T0
T1
T2
T3
T4
T5
T6
T7
TRE
RCVEN
THRL
MR
VDD
SFD
SFE
VGG
VSS
SBS
PI
CRL
WS1
WS2
RI
TO
RCK
TCK
-12V
+5V
U5
7474
U8
U4
7410
U7
9602
U3
9602
U9
U10
LM311
U12
LM311
U11
LM741
U13
5012 CN
R1 1K
R2 1K
R3 5K
R4 10K
R5 39K
R6 10K
R7 470Ω
R8 470K
R9 4.7K
R10 470K
R11 4.7K
R12 10K
R13 10K
R14 1K
R15 100K
R16 10K
R17 2.2K
C1 .05μF
C2 .02μF
C3 100pF
C4 .1μF
C5 100pF
C6 .1μF
C7 3300pF
C8 .1μF
C9 4.7μF
C10 .1μF
C11 100pF
C12 .1μF
C32 .1μF
C33 .1μF
TP1
TP2
TP6
TP7
TP8
TP10
PUP
9600 Baud DATA OUT
57
59, 120
60, 121
RP1 330Ω
DS1
DS6
ULN 2003
STOP 56
GND 55
F.F. 54
R.W. 53
PLAY 52
GND 51
61,122
C13 4.7μF
C16 .01μF
C17-C23 .01μF
39,100
C14 4.7μF
C8 .1μF
C24-C27 .01μF
40,101
C15 4.7μF
C10 .1μF
C28-C31 .01μF
1,2,3,4,5, 6,7,8
GND

LED's

- * DATA IN
- *
- * PLAY
- * RW
- * FF
- * STOP

FROM TOP
REWIND = 4
FF = 5
PLAY = 3
STOP = ~~2~~ 6

TOP
DS6
↑
DS1
BOTTOM

BOARD

TRANSPORT CONTROL
MODULE
MASTER

Pizza Time Theatre Inc.
1213 Innsbruck Dr.
Sunnyvale, CA 94086

Chuck E. Cheese's Pizza Time Theatre

NOTICE TO ALL PERSONS RECEIVING THIS DRAWING
CONFIDENTIAL: Reproduction Forbidden without the specific written permission of Pizza Time Theatre Inc. of Sunnyvale, California. This drawing is only conditionally issued, and neither receipt nor possession thereof confers or transfers any right in, or license to use, the subject matter of the drawing or any design or technical information shown thereon, nor any right to reproduce this drawing or any part thereof, except for manufacture by vendors for Pizza Time Theatre Inc. and for manufacture under the corporation's written license; no right to reproduce this drawing is granted or the subject matter thereof unless by written agreement with or written permission from the corporation.

REVISIONS

DATE 7-21-82
DRAWN BY B. Van Dick
APPROVED
SCALE

TITLE

SHEET
OF

Rear View Top

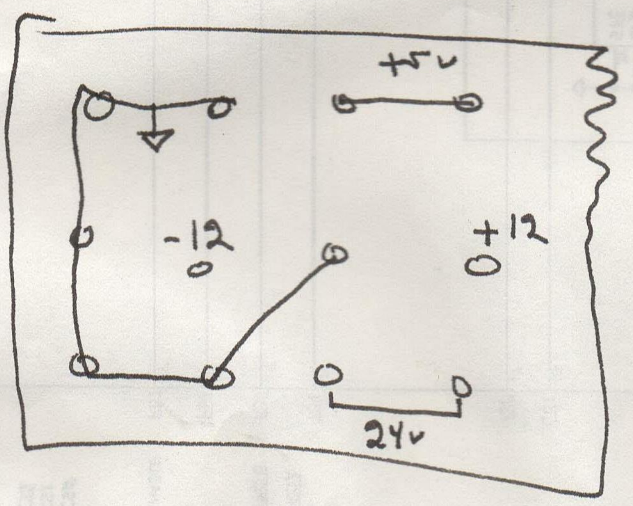

SYM	ECO NO.	REVISIONS DESCRIPTION	DATE	APPROVED
B				
C	0460	J1 WAS CHANGED FROM P/N 530-0016 TO P/N 530-0021	6/2/80	
D	0533	ADDED MIC. HOOK-UP TO DWG. IN ZONE D-2	9/25/80	
E	0837	ADDED W2 JUMPER IN ZONE B8 - USED ON -20 VERSION ONLY.	7/27/8	BH
F	1629	REMOVED NOTES	4-13 83	Dany

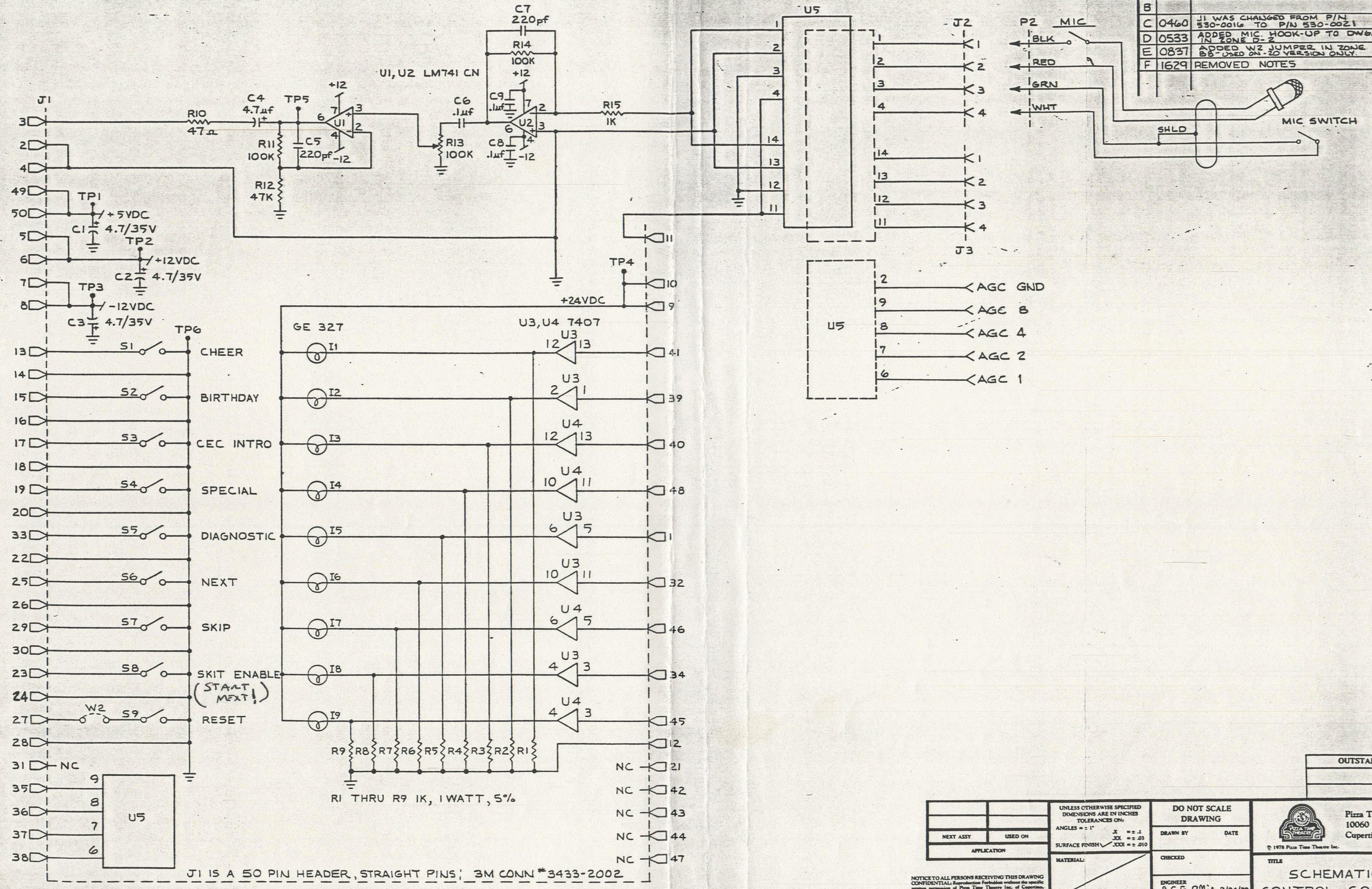
U1, U2 LM741 CN
J1
R10 47Ω
C4 4.7µf
TP5
+12
U1
R11 100K
C5 220pf
-12
R12 47K
C7 220pf
R14 100K
+12
C6 .1µf
R13 100K
C9 .1µf
U2
C8 .1µf
-12
R15 1K
U5
J2
P2
MIC
BLK
RED
GRN
WHT
SHLD
MIC SWITCH
J3
TP1 +5VDC
C1 4.7/35V
TP2 +12VDC
C2 4.7/35V
TP3 -12VDC
C3 4.7/35V
TP4
+24VDC
TP6
S1 CHEER
S2 BIRTHDAY
S3 CEC INTRO
S4 SPECIAL
S5 DIAGNOSTIC
S6 NEXT
S7 SKIP
S8 SKIT ENABLE
(START NEXT!)
W2
S9 RESET
GE 327
I1
I2
I3
I4
I5
I6
I7
I8
I9
U3, U4 7407
AGC GND
AGC 8
AGC 4
AGC 2
AGC 1
R9 R8 R7 R6 R5 R4 R3 R2 R1
R1 THRU R9 1K, 1 WATT, 5%
NC
J1 IS A 50 PIN HEADER, STRAIGHT PINS; 3M CONN # 3433-2002

OUTSTANDING ECNs

NEXT ASSY	USED ON
APPLICATION	

UNLESS OTHERWISE SPECIFIED DIMENSIONS ARE IN INCHES TOLERANCES ON:
ANGLES = ± 1°
.X = ± .1
.XX = ± .03
.XXX = ± .010
SURFACE FINISH ✓

MATERIAL:

FINISH:

DO NOT SCALE DRAWING

DRAWN BY DATE

CHECKED

ENGINEER A.G.G Alfie 9/24/79

PROJECT ENGINEER

MFG ENGINEER

Pizza Time Theatre Inc.
10060 Bubb Road
Cupertino, CA 95014

© 1978 Pizza Time Theatre Inc.

TITLE SCHEMATIC CONTROL CONSOLE

SIZE D
DRAWING NO. 008-0007-01-
REV F
SCALE NONE
SHEET 1 OF 1

NOTICE TO ALL PERSONS RECEIVING THIS DRAWING CONFIDENTIAL: Reproduction Forbidden without the specific written permission of Pizza Time Theatre Inc. of Cupertino, California. This drawing is only conditionally issued, and neither receipt nor possession thereof confers or transfers any right in, or license to use, the subject matter of the drawing or any design or technical information shown thereon, nor any right to reproduce this drawing or any part thereof, except for manufacture by vendors for Pizza Time Theatre Inc. and for manufacture under the corporation's written license, no right to reproduce this drawing is granted or the subject matter thereof unless by written agreement with or written permission from the corporation.

BISHOP GRAPHICS/ACCUPRESS REORDER NO. A-5497

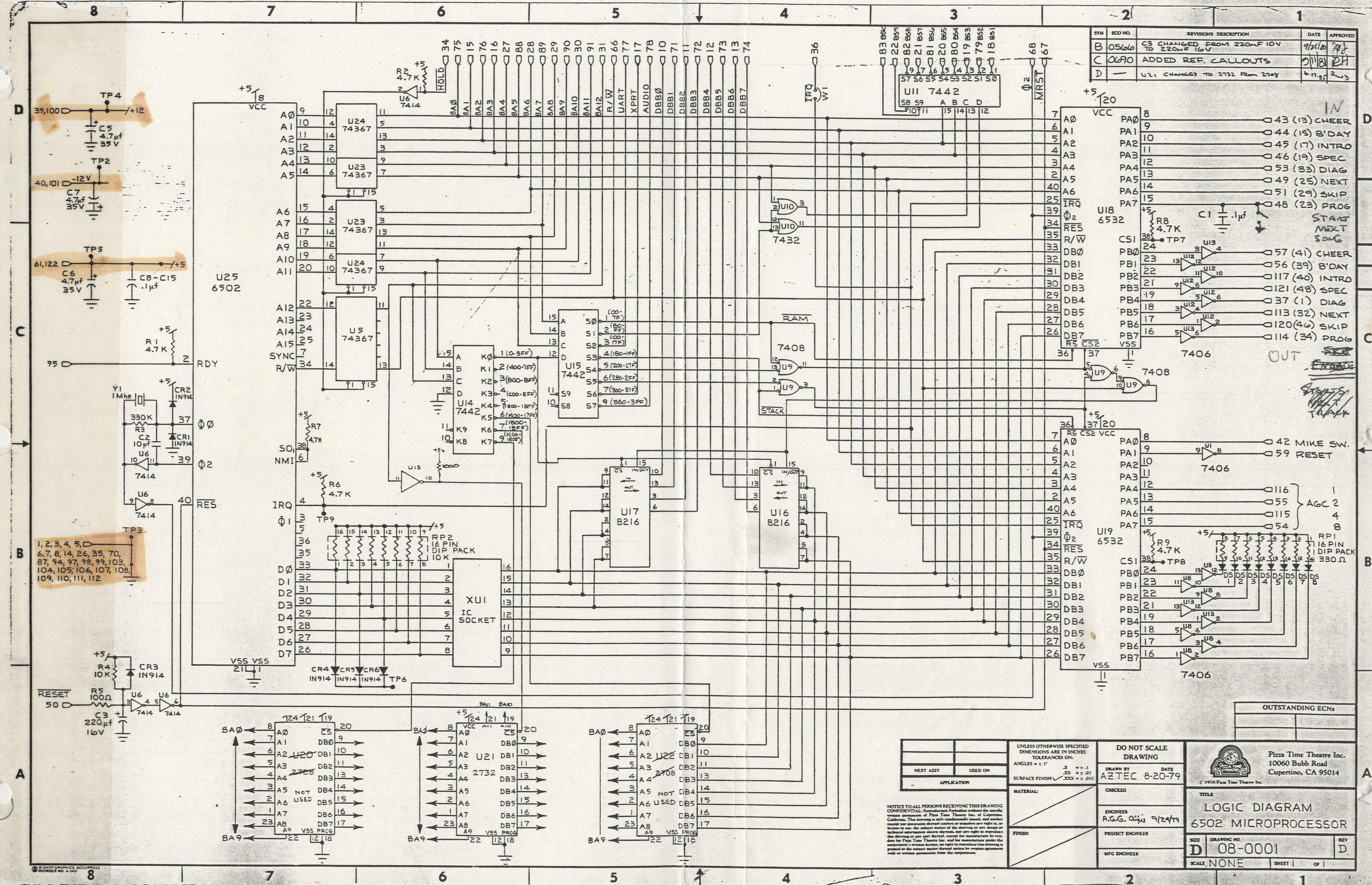
U25 6502
U24 74367
U23 74367
U5 74367
U14 7442
U15 7442
U11 7442
U17 8216
U16 8216
U18 6532
U19 6532
XU1 IC SOCKET
U20 2708 NOT USED
U21 2732
U22 2708 NOT USED
7432
7408
7406
7414
RP1 16 PIN DIP PACK 330 Ω
RP2 16 PIN DIP PACK 10 K
Y1 1 Mhz
TP1
TP2
TP3
TP4
TP5
TP6
TP7
TP8
TP9
39,100 +12
40,101 -12 V
61,122 +5
C5 4.7 µf 35 V
C7 4.7 µf 35V
C6 4.7 µf 35 V
C8-C15 .1 µf
1, 2, 3, 4, 5, 6, 7, 8, 14, 26, 35, 70, 87, 94, 97, 98, 99, 103, 104, 105, 106, 107, 108, 109, 110, 111, 112
R1 4.7 K
95 RDY
RESET 50
R5 100 Ω
C3 220 µf 16V
R4 10 K
CR3 IN914
R6 4.7 K
R7 4.7K
R2 4.7 K
HOLD
IRQ W1
Φ2
MRST
RAM
STACK
43 (13) CHEER
44 (15) B'DAY
45 (17) INTRO
46 (19) SPEC
53 (33) DIAG
49 (25) NEXT
51 (29) SKIP
48 (23) PROG
57 (41) CHEER
56 (39) B'DAY
117 (40) INTRO
121 (48) SPEC
37 (1) DIAG
113 (32) NEXT
120 (46) SKIP
114 (34) PROG
IN
OUT
START NEXT SONG
~~SKIP~~
~~ENABLE~~
42 MIKE SW.
59 RESET
116
55
115
54
AGC 1 2 4 8
C1 .1µf
R8 4.7 K
R9 4.7 K
DS 1 2 3 4 5 6 7 8
BA0
BA9

SYM	ECO NO.	REVISIONS DESCRIPTION	DATE	APPROVED
B	05666	C3 CHANGED FROM 220mF 10V TO 220mF 16V	9/25/80	
C	0690	ADDED REF. CALLOUTS	5/11/81	RH
D	—	U21 CHANGED TO 2732 FROM 2708	6.17.85	RwD

OUTSTANDING ECNs

NEXT ASSY | USED ON

APPLICATION

NOTICE TO ALL PERSONS RECEIVING THIS DRAWING CONFIDENTIAL: Reproduction Forbidden without the specific written permission of Pizza Time Theatre Inc. of Cupertino, California. This drawing is only conditionally issued, and neither receipt nor possession thereof confers or transfers any right in, or license to use, the subject matter of the drawing or any design or technical information shown thereon, nor any right to reproduce this drawing or any part thereof, except for manufacture by vendors for Pizza Time Theatre Inc. and for manufacture under the corporation's written license, no right to reproduce this drawing is granted or the subject matter thereof unless by written agreement with or written permission from the corporation.

UNLESS OTHERWISE SPECIFIED DIMENSIONS ARE IN INCHES TOLERANCES ON:
ANGLES = ± 1°
.X = ± .1
.XX = ± .03
.XXX = ± .010
SURFACE FINISH ✓

MATERIAL:

FINISH:

DO NOT SCALE DRAWING

DRAWN BY AZTEC DATE 8-20-79

CHECKED

ENGINEER R.G.G. 9/24/79

PROJECT ENGINEER

MFG ENGINEER

Pizza Time Theatre Inc.
10060 Bubb Road
Cupertino, CA 95014

© 1978 Pizza Time Theatre Inc.

TITLE
LOGIC DIAGRAM
6502 MICROPROCESSOR

SIZE D DRAWING NO. 08-0001 REV D

SCALE NONE SHEET 1 OF 1

SYM	ECO NO.	REVISIONS DESCRIPTION	DATE	APPROVED
A	1208	PRODUCTION RELEASE	4/15/82	CJ

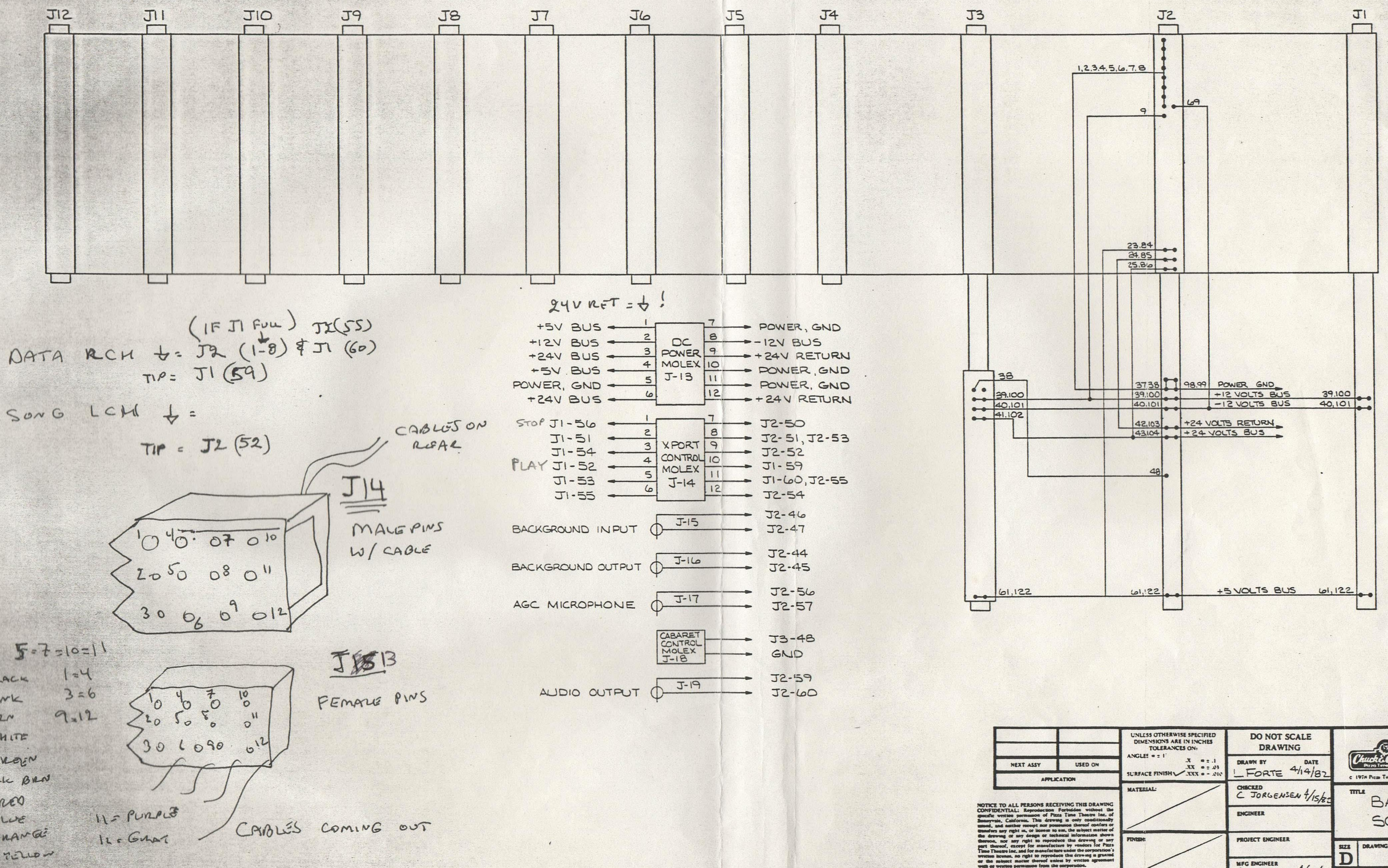
J12
J11
J10
J9
J8
J7
J6
J5
J4
J3
J2
J1
1,2,3,4,5,6,7,8
9
69
23.84
24.85
25.86
38
39.100
40.101
41.102
37.38
98.99
POWER GND
+12 VOLTS BUS
-12 VOLTS BUS
42.103
+24 VOLTS RETURN
43.104
+24 VOLTS BUS
48
61,122
+5 VOLTS BUS
+5V BUS
+12V BUS
+24V BUS
+5V BUS
POWER, GND
+24V BUS
DC POWER MOLEX J-13
POWER, GND
-12V BUS
+24V RETURN
POWER, GND
POWER, GND
+24V RETURN
STOP J1-56
J1-51
J1-54
PLAY J1-52
J1-53
J1-55
XPORT CONTROL MOLEX J-14
J2-50
J2-51, J2-53
J2-52
J1-59
J1-60, J2-55
J2-54
BACKGROUND INPUT
J-15
J2-46
J2-47
BACKGROUND OUTPUT
J-16
J2-44
J2-45
AGC MICROPHONE
J-17
J2-56
J2-57
CABARET CONTROL MOLEX J-18
J3-48
GND
AUDIO OUTPUT
J-19
J2-59
J2-60
CABLES ON REAR
J14
MALE PINS W/ CABLE
~~J15~~13
FEMALE PINS
CABLES COMING OUT

24V RET = ⏚ !

(IF J1 FULL) J2(55)

DATA RCH ⏚ = J2 (1-8) & J1 (60)

TIP = J1 (59)

SONG LCH ⏚ =

TIP = J2 (52)

5 = 7 = 10 = 11

1 = 4

3 = 6

9 = 12

1 = BLACK
2 = PNK
3 = BRN
4 = WHITE
5 = GREEN
6 = DRK BRN
7 = RED
8 = BLUE
9 = ORANGE
10 = YELLOW
11 = PURPLE
12 = GRAY

OUTSTANDING ECNs

NEXT ASSY	USED ON
APPLICATION	

UNLESS OTHERWISE SPECIFIED
DIMENSIONS ARE IN INCHES
TOLERANCES ON:
ANGLES = ± 1°
.X = ± .1
.XX = ± .03
.XXX = ± .010
SURFACE FINISH ✓

MATERIAL:

FINISH:

DO NOT SCALE DRAWING

DRAWN BY L FORTE DATE 4/14/82
CHECKED C JORGENSEN 4/15/82
ENGINEER
PROJECT ENGINEER
MFG ENGINEER C JORGENSEN 4/15/82

Chuck E. Cheese's Pizza Time Theatre
Pizza Time Theatre Inc.
1213 Innsbruck Dr.
Sunnyvale, CA 94086

© 1978 Pizza Time Theatre Inc.

TITLE BACKPLANE - SCHEMATIC

SIZE D
DRAWING NO. 08-0032
REV A
SCALE NONE
SHEET 1 OF 1

NOTICE TO ALL PERSONS RECEIVING THIS DRAWING CONFIDENTIAL: Reproduction Forbidden without the specific written permission of Pizza Time Theatre Inc. of Sunnyvale, California. This drawing is only conditionally issued, and neither receipt nor possession thereof confers or transfers any right in, or license to use, the subject matter of the drawing or any design or technical information shown thereon, nor any right to reproduce this drawing or any part thereof, except for manufacture by vendors for Pizza Time Theatre Inc. and for manufacture under the corporation's written license, no right to reproduce this drawing is granted or the subject matter thereof unless by written agreement with or written permission from the corporation.

BRUNING 40 826

SYM	ZONE	REVISION DESCRIPTION	DATE	APPROVED

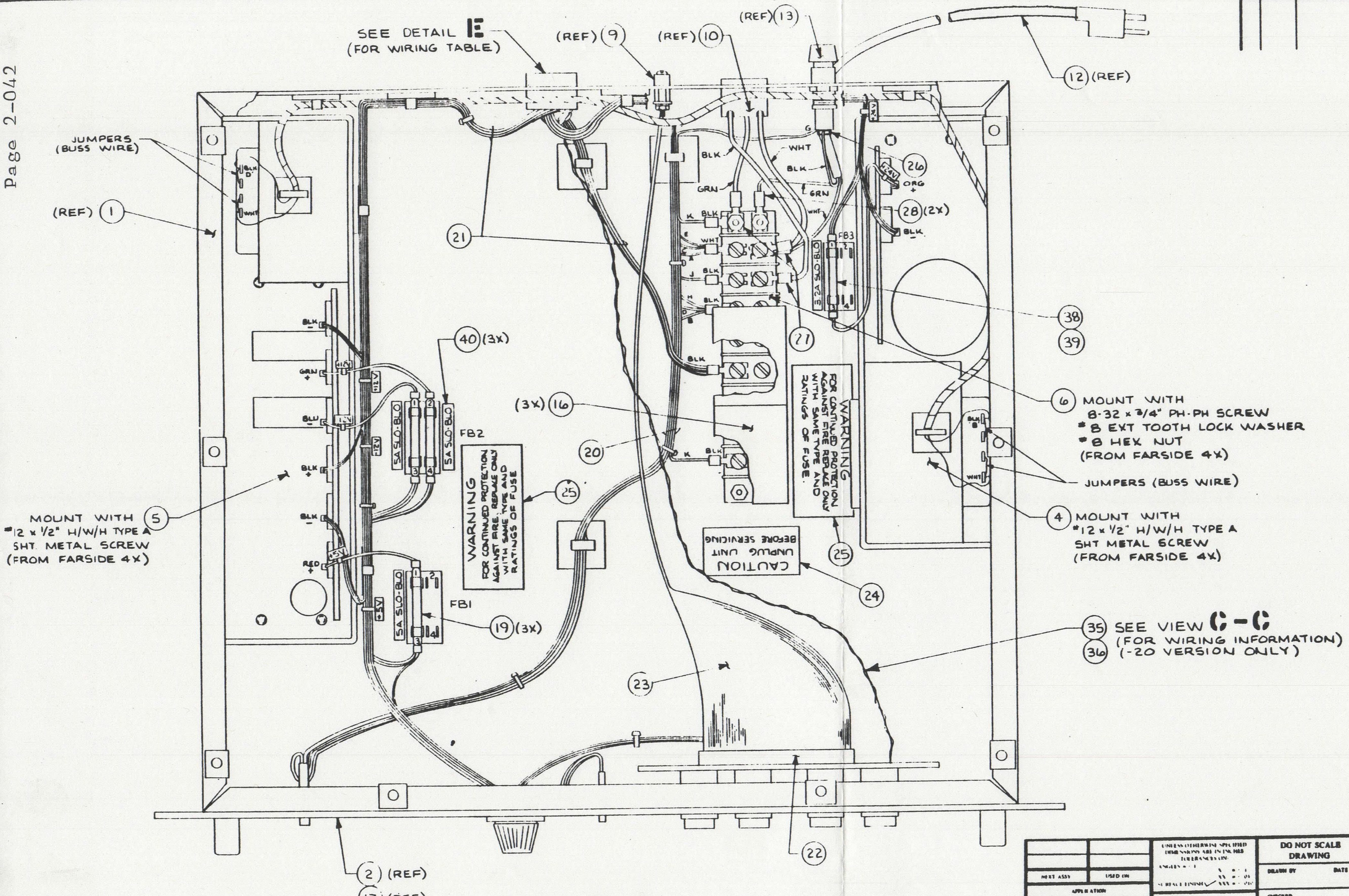
8
7
6
5
4
3
2
1
D
C
B
A
SEE DETAIL E
(FOR WIRING TABLE)
(REF) 9
(REF) 10
(REF) 13
12 (REF)
JUMPERS
(BUSS WIRE)
(REF) 1
21
BLK
WHT
GRN
BLK
GRN
WHT
K
E
J
H
BLK
26
ORG +
28 (2X)
BLK −
FB3
3A SLO-BLO
38
39
21
6 MOUNT WITH
8-32 x 3/4" PH-PH SCREW
#8 EXT TOOTH LOCK WASHER
#8 HEX NUT
(FROM FARSIDE 4X)
JUMPERS (BUSS WIRE)
4 MOUNT WITH
#12 x 1/2" H/W/H TYPE A
SHT METAL SCREW
(FROM FARSIDE 4X)
40 (3X)
FB2
5A SLO-BLO
5A SLO-BLO
+12V
−12V
+5V
BLK −
GRN +
BLU −
BLK +
BLK −
RED +
(3X) 16
20
WARNING
FOR CONTINUED PROTECTION AGAINST FIRE, REPLACE ONLY WITH SAME TYPE AND RATINGS OF FUSE
25
WARNING
FOR CONTINUED PROTECTION AGAINST FIRE REPLACE ONLY WITH SAME TYPE AND RATINGS OF FUSE.
25
CAUTION
UNPLUG UNIT
BEFORE SERVICING
24
5 MOUNT WITH
#12 x 1/2" H/W/H TYPE A
SHT. METAL SCREW
(FROM FARSIDE 4X)
FB1
5A SLO-BLO
19 (3X)
35 SEE VIEW C-C
(FOR WIRING INFORMATION)
36 (-20 VERSION ONLY)
23
22
2 (REF)
17 (REF)

VIEW A-A

SCALE: FULL

OUTSTANDING ECNs	

NEXT ASSY	USED ON
APPLICATION	

UNLESS OTHERWISE SPECIFIED
DIMENSIONS ARE IN INCHES
TOLERANCES ON:
ANGLES ± 1°
.X ± .1
.XX ± .01
SURFACE FINISH ✓ .XXX ± .010

MATERIAL
SEE P/L

FINISH

DO NOT SCALE DRAWING

DRAWN BY | DATE

CHECKED

ENGINEER

PROJECT ENGINEER

MFG ENGINEER

Pizza Time Theatre Inc.
10060 Bubb Road
Cupertino, CA 95014

© 1979 Pizza Time Theatre Inc.

TITLE
CONTROL CHASSIS
ASSEMBLY

SIZE D | DRAWING NO 00-0012 -10 -20 | REV E

NOTICE TO ALL PERSONS RECEIVING THIS DRAWING: CONFIDENTIAL. Reproduction forbidden without the specific written permission of Pizza Time Theatre Inc. of Cupertino, California. This drawing is only conditionally issued, and neither receipt nor possession thereof confers or transfers any right in, or license to use, the subject matter of the drawing or any design or technical information shown thereon, nor any right to reproduce this drawing or any part thereof, except for manufacture by vendors for Pizza Time Theatre Inc. and for manufacture under the corporation's written license, no right to reproduce this drawing is granted or the subject matter thereof unless by written agreement with or written permission from the corporation.

SYM	ECO NO	REVISIONS DESCRIPTION	DATE	APPROVED
A	1518	PRODUCTION RELEASE	11/21/82	C.J.

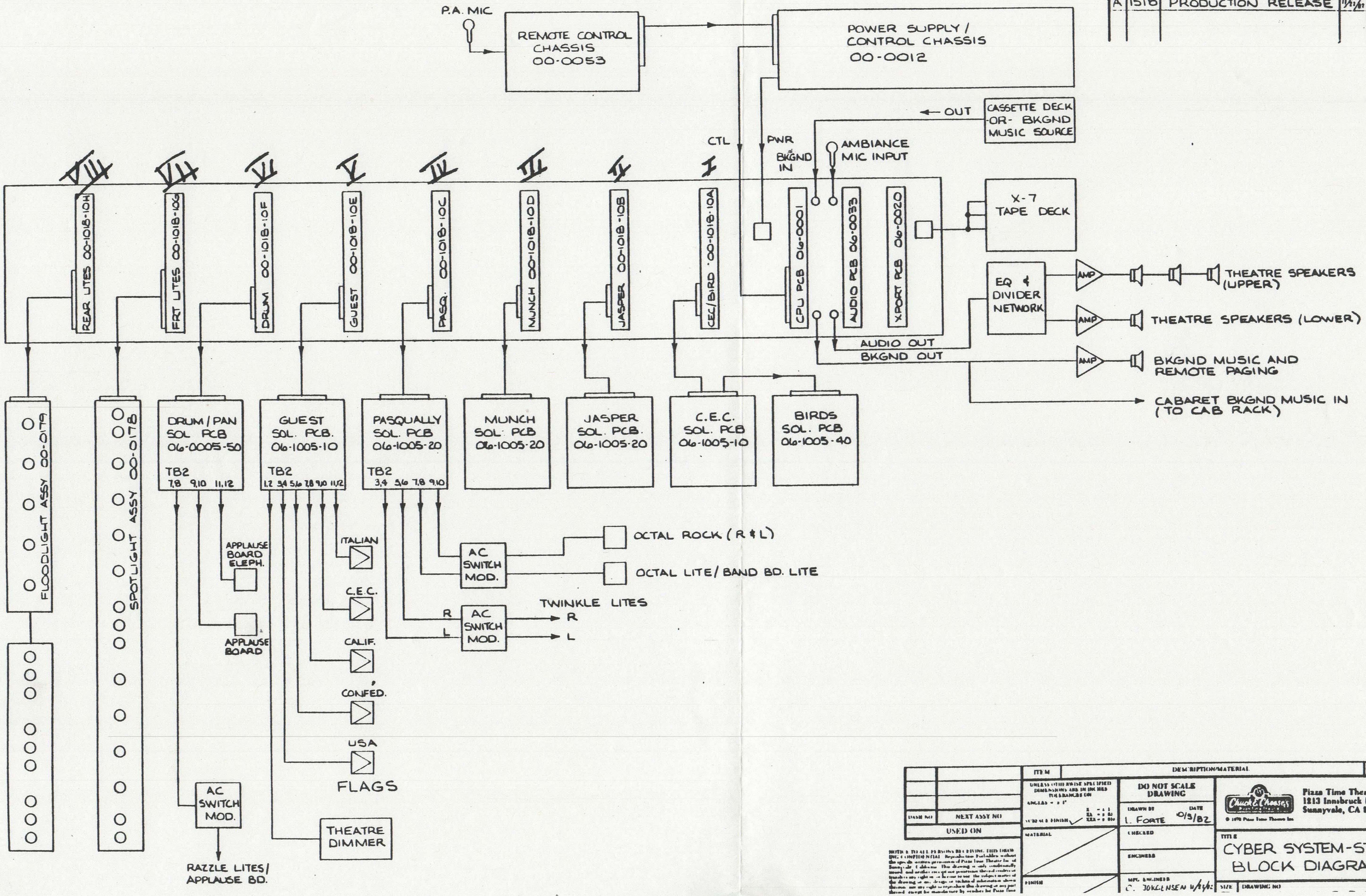
8
7
6
5
4
3
2
1
D
C
B
A
P.A. MIC
REMOTE CONTROL CHASSIS 00-0053
POWER SUPPLY / CONTROL CHASSIS 00-0012
OUT
CASSETTE DECK -OR- BKGND MUSIC SOURCE
CTL
PWR
BKGND IN
AMBIANCE MIC INPUT
VIII
VII
VI
V
IV
III
II
I
REAR LITES 00-1018-10H
FRT LITES 00-1018-10G
DRUM 00-1018-10F
GUEST 00-1018-10E
PASQ. 00-1018-10C
MUNCH 00-1018-10D
JASPER 00-1018-10B
CEC/BIRD 00-1018-10A
CPU PCB 06-0001
AUDIO PCB 06-0033
XPORT PCB 06-0020
X-7 TAPE DECK
EQ & DIVIDER NETWORK
AMP
AMP
AMP
THEATRE SPEAKERS (UPPER)
THEATRE SPEAKERS (LOWER)
AUDIO OUT
BKGND OUT
BKGND MUSIC AND REMOTE PAGING
CABARET BKGND MUSIC IN (TO CAB RACK)
FLOODLIGHT ASSY 00-0179
SPOTLIGHT ASSY 00-0178
DRUM / PAN SOL PCB 06-0005-50
TB2
7,8 9,10 11,12
GUEST SOL. PCB. 06-1005-10
TB2
1,2 3,4 5,6 7,8 9,10 11,12
PASQUALLY SOL. PCB 06-1005-20
TB2
3,4 5,6 7,8 9,10
MUNCH SOL. PCB 06-1005-20
JASPER SOL. PCB. 06-1005-20
C.E.C. SOL. PCB 06-1005-10
BIRDS SOL. PCB 06-1005-40
APPLAUSE BOARD ELEPH.
APPLAUSE BOARD
ITALIAN
C.E.C.
CALIF.
CONFED.
USA
FLAGS
AC SWITCH MOD.
OCTAL ROCK (R & L)
OCTAL LITE / BAND BD. LITE
R
L
AC SWITCH MOD.
TWINKLE LITES
R
L
AC SWITCH MOD.
RAZZLE LITES / APPLAUSE BD.
THEATRE DIMMER

		ITEM	DESCRIPTION/MATERIAL	QTY
DASH NO	NEXT ASSY NO			
USED ON				

UNLESS OTHERWISE SPECIFIED DIMENSIONS ARE IN INCHES
TOLERANCES ON
ANGLES = ± 1°
X = ± .1
XX = ± .03
XXX = ± .010
SURFACE FINISH ✓

MATERIAL

FINISH

DO NOT SCALE DRAWING

DRAWN BY L. FORTE
DATE 10/9/82

CHECKED

ENGINEER

MFG. ENGINEER C. JORGENSEN 11/21/82

Chuck E. Cheese's Pizza Time Theatre
© 1978 Pizza Time Theatre Inc.

Pizza Time Theatre Inc.
1213 Innsbruck Dr.
Sunnyvale, CA 94086

TITLE
CYBER SYSTEM-STAGE
BLOCK DIAGRAM

SIZE | DRAWING NO | REV

NOTICE TO ALL PERSONS RECEIVING THIS DRAWING CONFIDENTIAL Reproduction Forbidden without the specific written permission of Pizza Time Theatre Inc. of Sunnyvale, California. This drawing is only conditionally issued, and neither receipt nor possession thereof confers or transfers any right in, or license to use, the subject matter of the drawing or any design or technical information shown thereon, nor any right to reproduce this drawing or any part thereof, except for manufacture by vendors for Pizza Time

SYM	ECO NO	REVISION DESCRIPTION	DATE	APPROVED

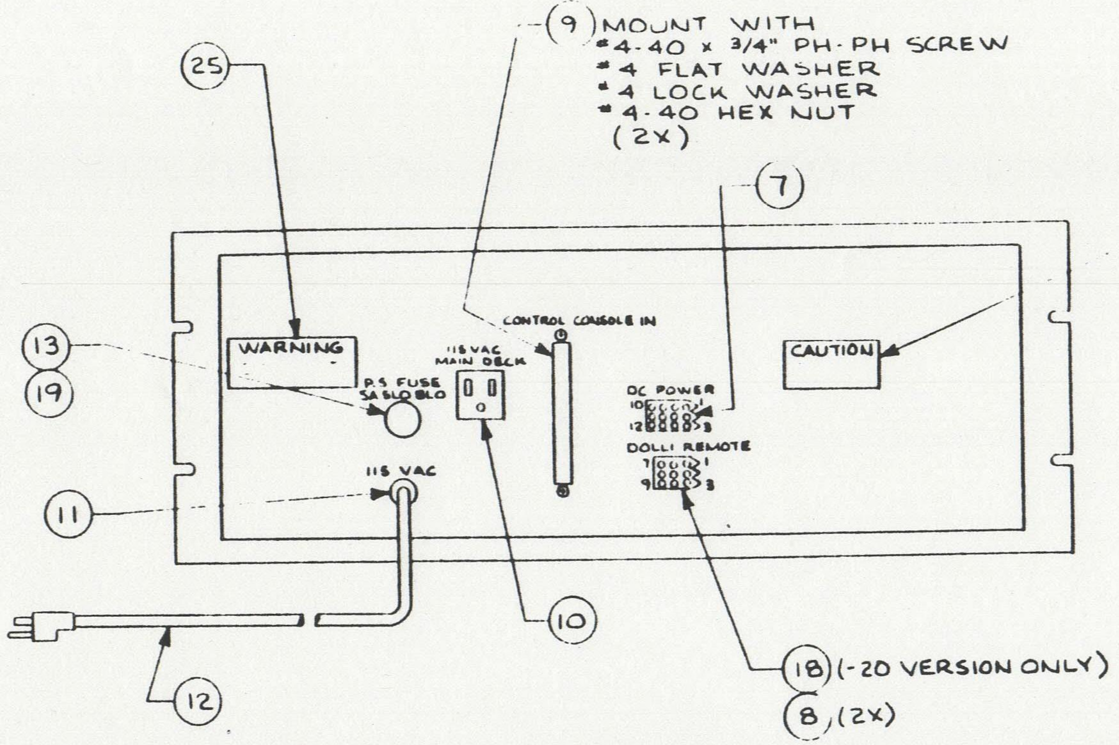
(9) MOUNT WITH
#4-40 x 3/4" PH-PH SCREW
#4 FLAT WASHER
#4 LOCK WASHER
#4-40 HEX NUT
(2X)
(25)
(7)
(24)
(13)
(19)
(11)
(12)
(10)
(18) (-20 VERSION ONLY)
(8) (2X)
WARNING
CAUTION
CONTROL CONSOLE IN
115 VAC MAIN DECK
P.S. FUSE 5A SLO BLO
DC POWER
DOLLI REMOTE
115 VAC

VIEW B-B

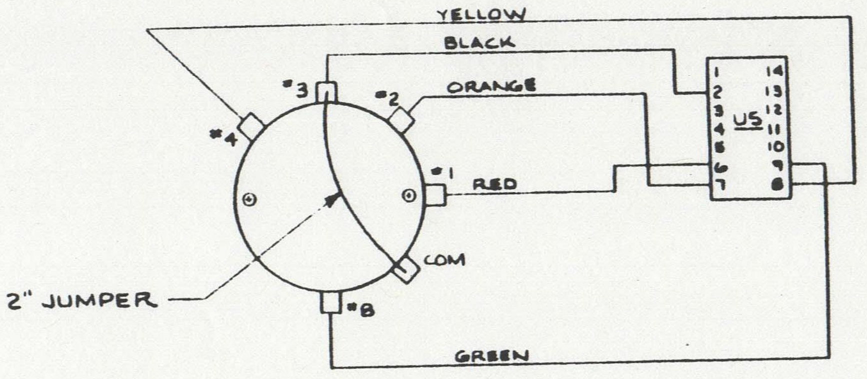
YELLOW
BLACK
ORANGE
RED
GREEN
#1
#2
#3
#4
#8
COM
US
2" JUMPER

DETAIL D (REAR VIEW)
SCALE: 2|1

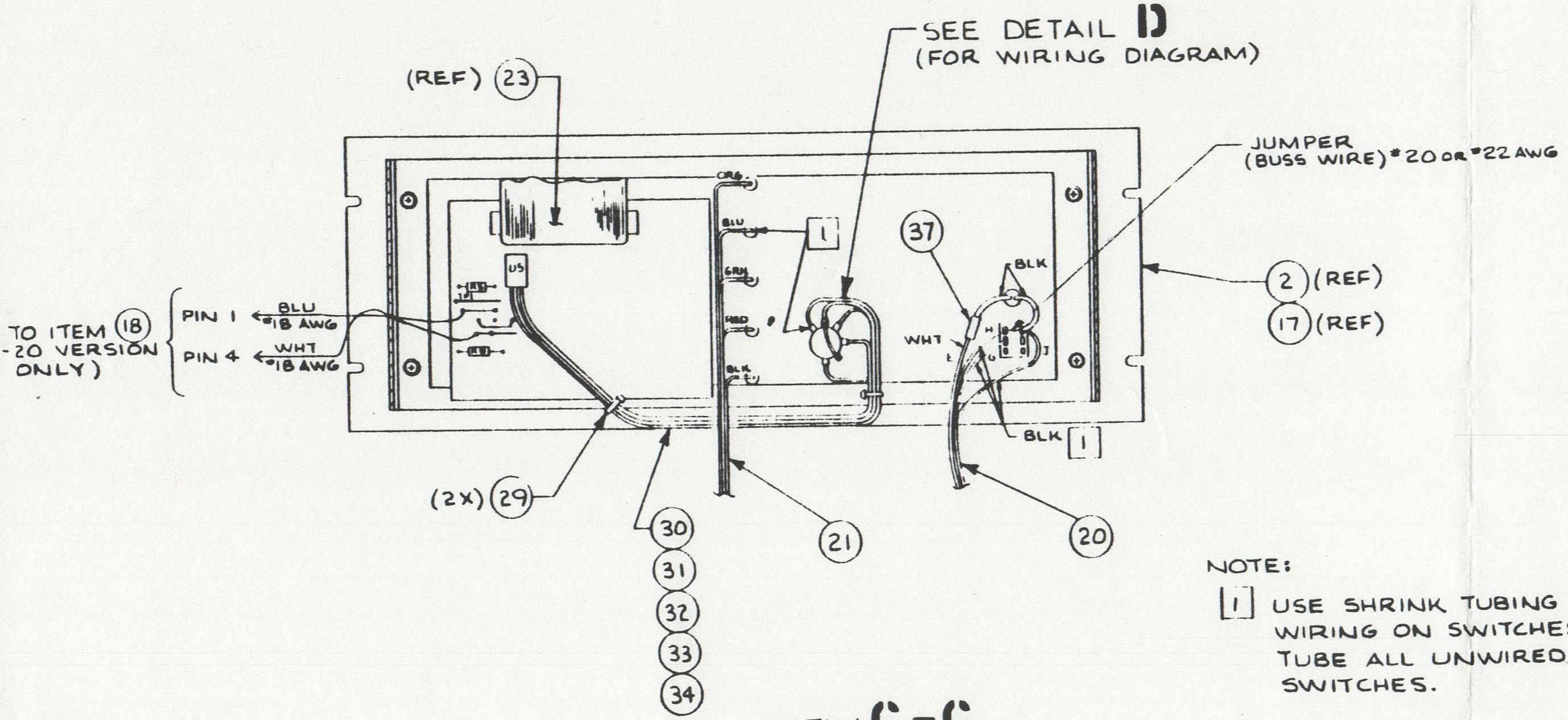
SEE DETAIL D
(FOR WIRING DIAGRAM)
(REF) (23)
JUMPER
(BUSS WIRE) #20 OR #22 AWG
TO ITEM (18)
(-20 VERSION ONLY)
PIN 1
PIN 4
BLU #18 AWG
WHT #18 AWG
US
ORG
BLU
GRN
RED
BLK
WHT
BLK
BLK
1
(37)
(2) (REF)
(17) (REF)
(2X) (29)
(30)
(31)
(32)
(33)
(34)
(21)
(20)

VIEW C-C

NOTE:

1 USE SHRINK TUBING ON ALL WIRING ON SWITCHES. SHRINK TUBE ALL UNWIRED LEGS ON SWITCHES.

DETAIL E

WIRING DIAGRAM FOR ITEM (21) - DC HARNESS ASSEMBLY

FROM			TO	
PART NUMBER	PIN # - OR TERMINAL POSITION	WIRE COLOR	PART NUMBER	PIN # - OR TERMINAL POSITION
550-0004	5	BLACK	700-0005	+12V (-TERM.)
550-0004	2	GREEN	830-0002	FB2-4
550-0004	8	BLUE	830-0002	FB2-3
550-0004	11	BLACK	700-0005	-12V (+ TERM.)
550-0004	7	BLACK	700-0005	+5V (- TERM.)
550-0004	10	BLACK	700-0005	+5V (- TERM.)
550-0004	1	RED	830-0002	FB1-3
550-0004	4	RED	830-0002	FB1-3
550-0004	3	ORANGE	830-0010	FB3-1
550-0004	6	ORANGE	830-0010	FB3-1
550-0004	12	BLACK	700-0004	+24V (- TERM.)
550-0004	9	BLACK	700-0004	+24V (-TERM.)
700-0005	+12V (- TERM.)	BLACK	580-0009	5
700-0005	-12V (+ TERM.)	BLACK	580-0009	5
700-0005	+5V (- TERM.)	BLACK	580-0009	5
700-0004	+24V (- TERM.)	BLACK	580-0009	5
700-0005	+12V (- TERM)	BLACK	TEST POINT	GND
830-0002	FB2-4	GREEN	TEST POINT	+12 VDC
830-0002	FB2-3	BLUE	TEST POINT	-12 VDC
830-0002	FB1-3	RED	TEST POINT	+5 VDC
830-0010	FB3-1	ORANGE	TEST POINT	+24 VDC
830-0002	FB1-1	RED	700-0005	+5V (+ TERM)
830-0002	FB2-1	BLUE	700-0005	-12V (- TERM)
830-0002	FB2-2	GREEN	700-0005	+12V (+ TERM)
830-0010	FB3-3	ORANGE	700-0004	+24V (+ TERM)

NEXT ASSY	USED ON
APPLICATION	

UNLESS OTHERWISE SPECIFIED DIMENSIONS ARE IN INCHES
TOLERANCES ON:
SURFACE FINISH ✓

MATERIAL
SEE P/L

FINISH

DO NOT SCALE DRAWING

DRAWN BY
DATE
CHECKED
ENGINEER
PROJECT ENGINEER
MFG ENGINEER

Pizza Time Theatre Inc.
10060 Bubb Road
Cupertino, CA 95014

TITLE
CONTROL CHASSIS ASSEMBLY

SIZE D
DRAWING NO 00-0012 -10 -20
REV E
SCALE 1/2 & NOTED
SHEET 3 OF 5

Q.A.	REV DATE.
ORIGINATOR Barrios	APPROVAL QA Barrios
APPROVAL ENG M. Crow	APPROVAL MFG.

UALITY ASSURANCE OPERATING PROCEDURE

tle: PASQUALLY (STAGE) AIRLINE ASSEMBLY

WORKMANSHIP STANDARD

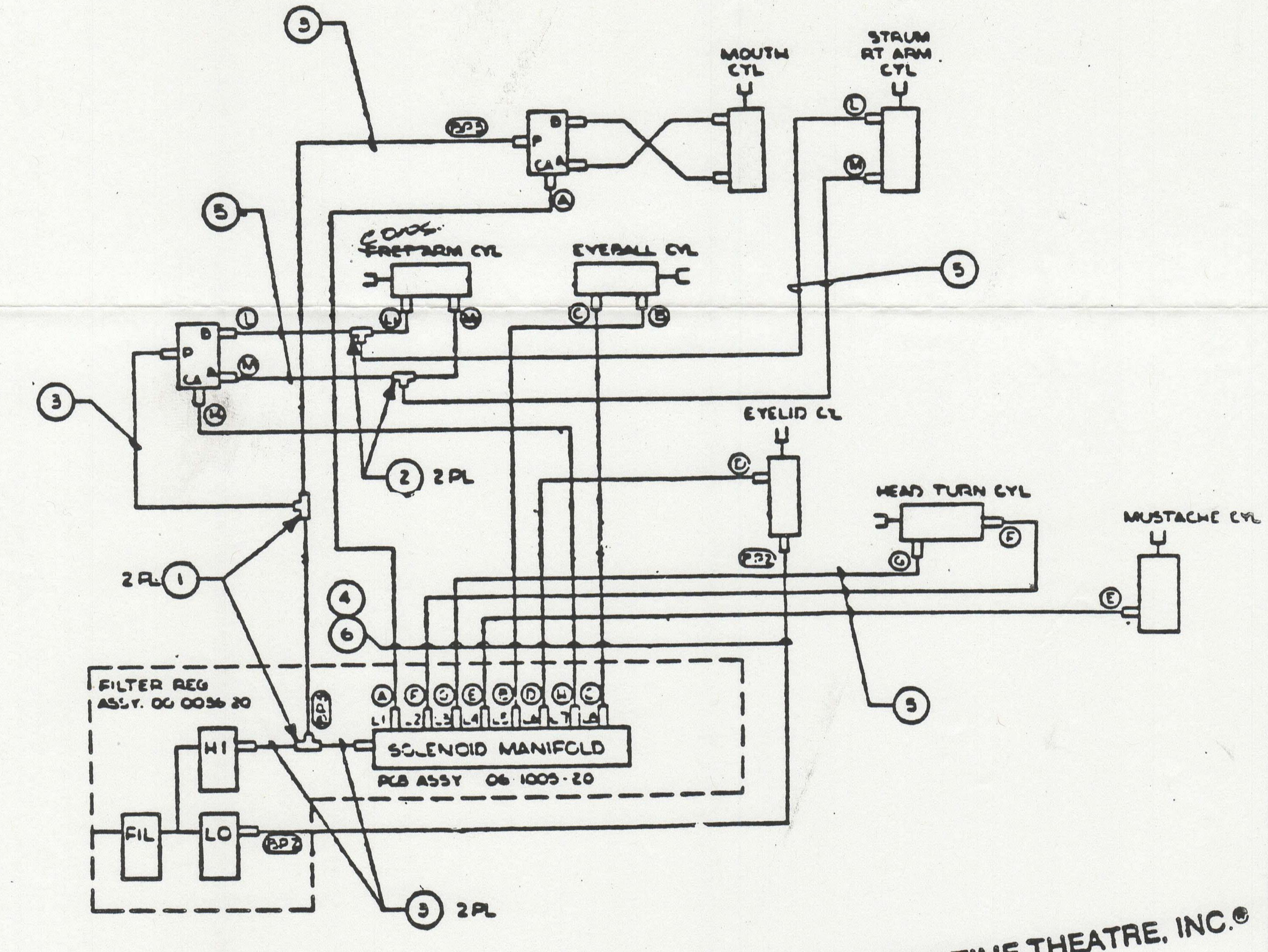

MOUTH CYL
STRUM RT ARM CYL
~~FRET~~ CORD ARM CYL
EYEBALL CYL
EYELID CYL
HEAD TURN CYL
MUSTACHE CYL
FILTER REG ASSY. 00 0036 20
HI
LO
FIL
SOLENOID MANIFOLD
PCB ASSY 06 1005 20
5
3
2 2PL
2PL 1
4
6
3 2PL
L
M
A
B
C
D
E
F
G
H
P
CA

NOTES:

1 SEE 00-0325 WIRE LIST- JASPER/PASQUALLY AIRLINE HARNESS ASSY FOR TUBING USEAGE.

FOR USE BY PIZZA TIME THEATRE, INC.® ONLY

PROPRIETARY INFORMATION
PIZZA TIME THEATRE, INC.®

Q.A.	REV DATE
ORIGINATOR	APPROVAL QA
APPROVAL ENG	APPROVAL MFG.

UALITY ASSURANCE OPERATING PROCEDURE

itle: C.E.C./GUEST AIRLINE ASSEMBLY WORKMANSHIP STANDARD

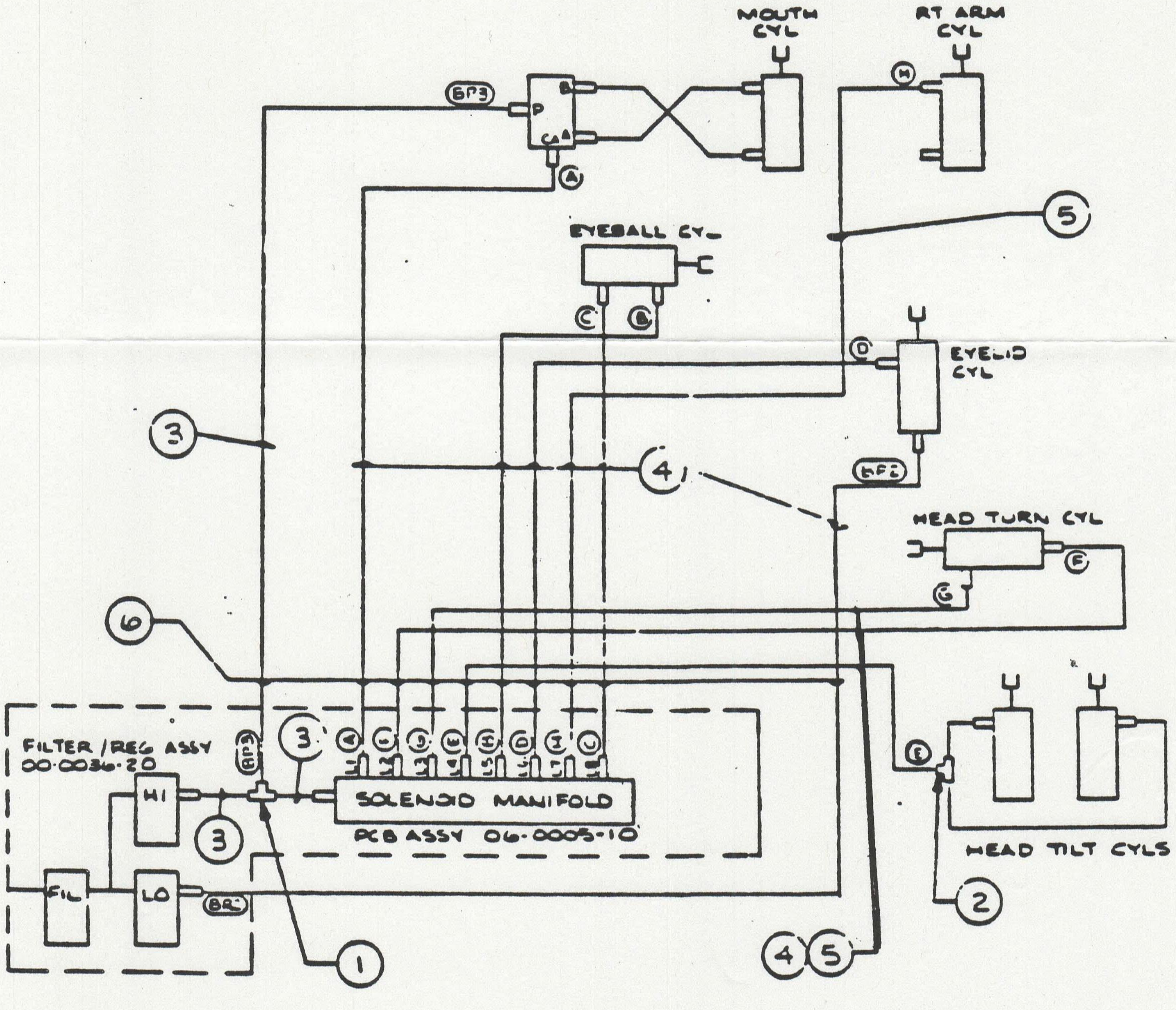
MOUTH CYL
RT ARM CYL
BP3
P
B
A
A
H
5
EYEBALL CYL
C
B
D
EYELID CYL
3
4
BP2
HEAD TURN CYL
F
G
6
FILTER /REG ASSY
00-0036-20
BP3
3
SOLENOID MANIFOLD
PCB ASSY 06-0005-10
HI
3
FIL
LO
BR
1
E
HEAD TILT CYLS
2
4
5

NOTES:

1. SEE 04-0001 WIRE LIST- CEC & GUEST AIRLINES, FOR TUBING USEAGE.

FOR USE BY PIZZA TIME THEATRE, INC.® ONLY

PROPRIETARY INFORMATION
PIZZA TIME THEATRE, INC.®

ck E. Cheese's
zza Time Theatre

Q.A.	REV DATE.
ORIGINATOR	APPROVAL QA
APPROVAL ENG.	APPROVAL MFG.

UALITY ASSURANCE OPERATING PROCEDURE

tle: MUNCH (STAGE) AIRLINE ASSEMBLY

WORKMANSHIP STANDARD

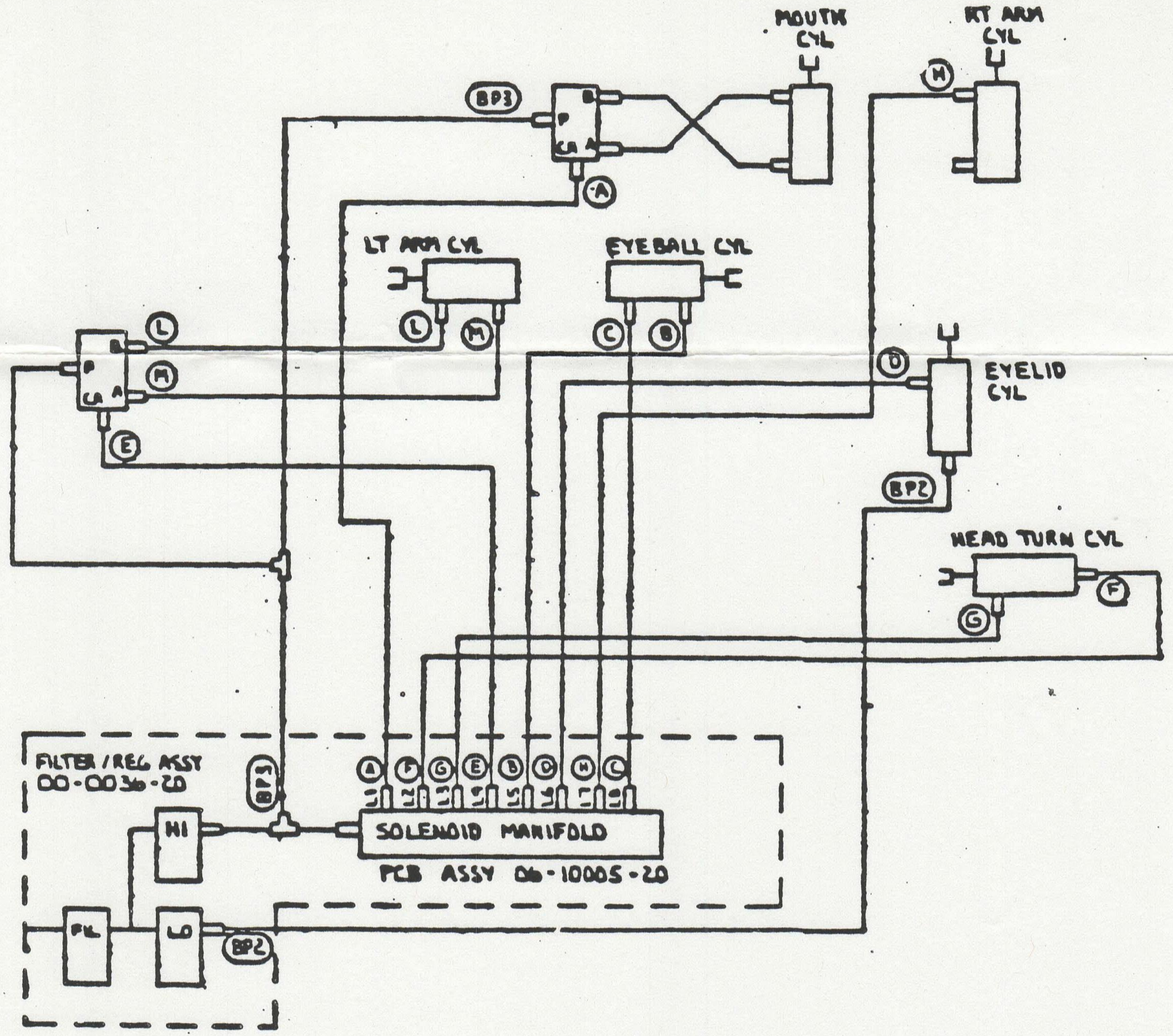
MOUTH CYL
RT ARM CYL
BP3
P
B
A
EX
A
H
LT ARM CYL
EYEBALL CYL
L
M
C
B
L
M
E
D
EYELID CYL
BP2
HEAD TURN CYL
F
G
FILTER / REG ASSY
00-0036-20
BP3
A F G E B D H C
HI
SOLENOID MANIFOLD
PCB ASSY 06-1000S-20
FIL
LO
BP2

NOTES:
1. SEE DWG # 00-0324-10 MUNCH (STAGE) AIRLINE ASSY FOR TUBING USAGE.

FOR USE BY PIZZA TIME THEATRE, INC.®
ONLY

PROPRIETARY INFORMATION
PIZZA TIME THEATRE, INC.®

Q.A.	REV DATE.
ORIGINATOR J. Barridl	APPROVAL QA J. Barridl
APPROVAL ENG M. Cass	APPROVAL MFG.

ALITY ASSURANCE OPERATING PROCEDURE

le: JASPER T. JOWLS AIRLINE ASSEMBLY WORKMANSHIP STANDARD

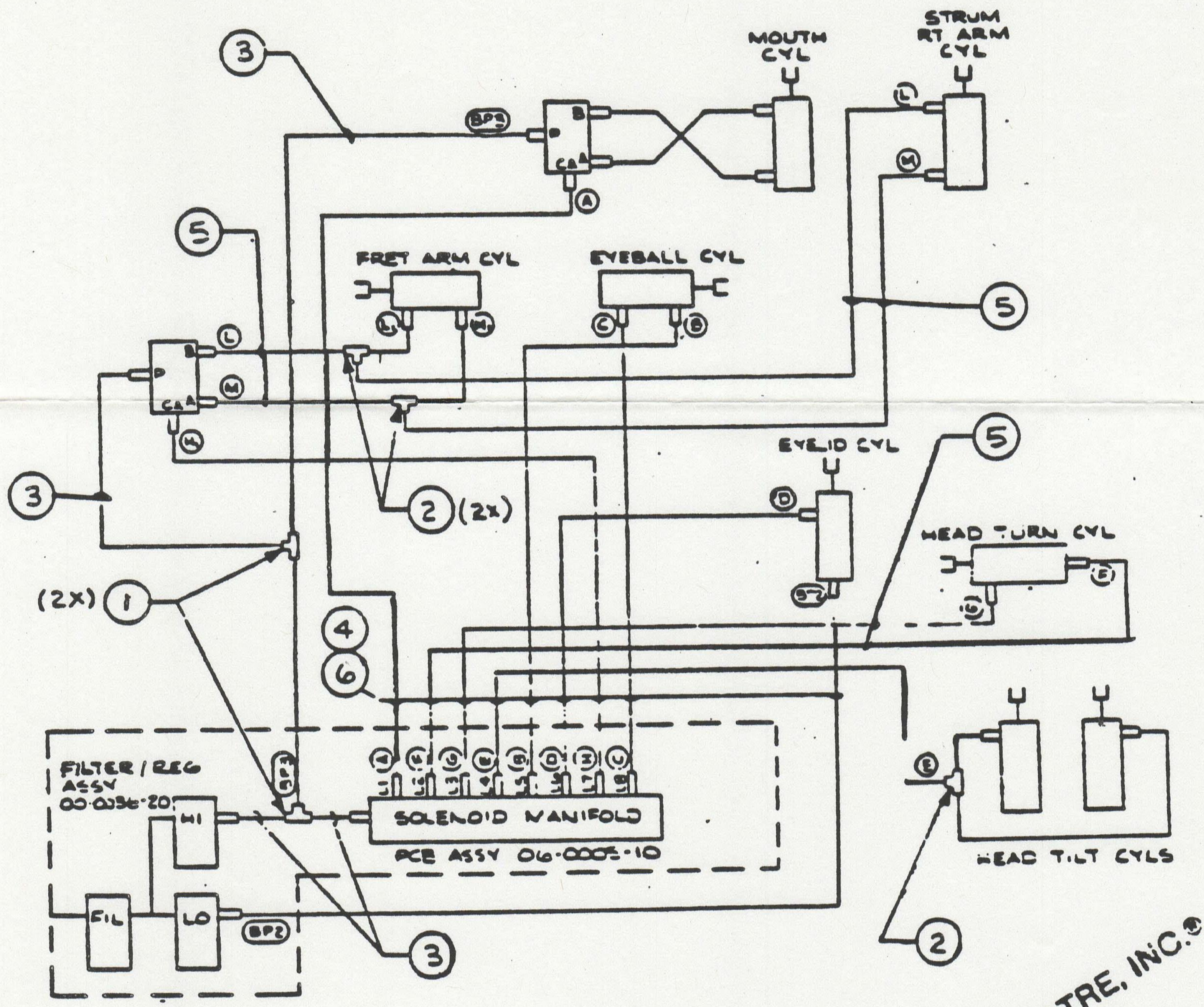
3
BP3
MOUTH CYL
STRUM RT ARM CYL
L
M
B
P
CA A
A
5
FRET ARM CYL
EYEBALL CYL
L
M
C
B
5
B
P
L
M
CA A
M
3
2 (2X)
EYELID CYL
D
5
HEAD TURN CYL
E
(2X) 1
4
6
FILTER / REG ASSY 00-0036-20
HI
BP3
SOLENOID MANIFOLD
PCB ASSY 06-0005-10
FIL
LO
BP2
3
E
HEAD TILT CYLS
2

NOTES:

1. SEE 04-0002 WIRE LIST - JASPER JOWLS AIRLINES FOR TUBING USEAGE.

FOR USE BY PIZZA TIME THEATRE, INC.® ONLY

PROPRIETARY INFORMATIO
PIZZA TIME THEATRE, INC.®

		WASHER		
D	1007	ADDED NOTE #5		
	1129	OBSOLETE 00-0043-10 & OBSOLETE 00-0043-20		

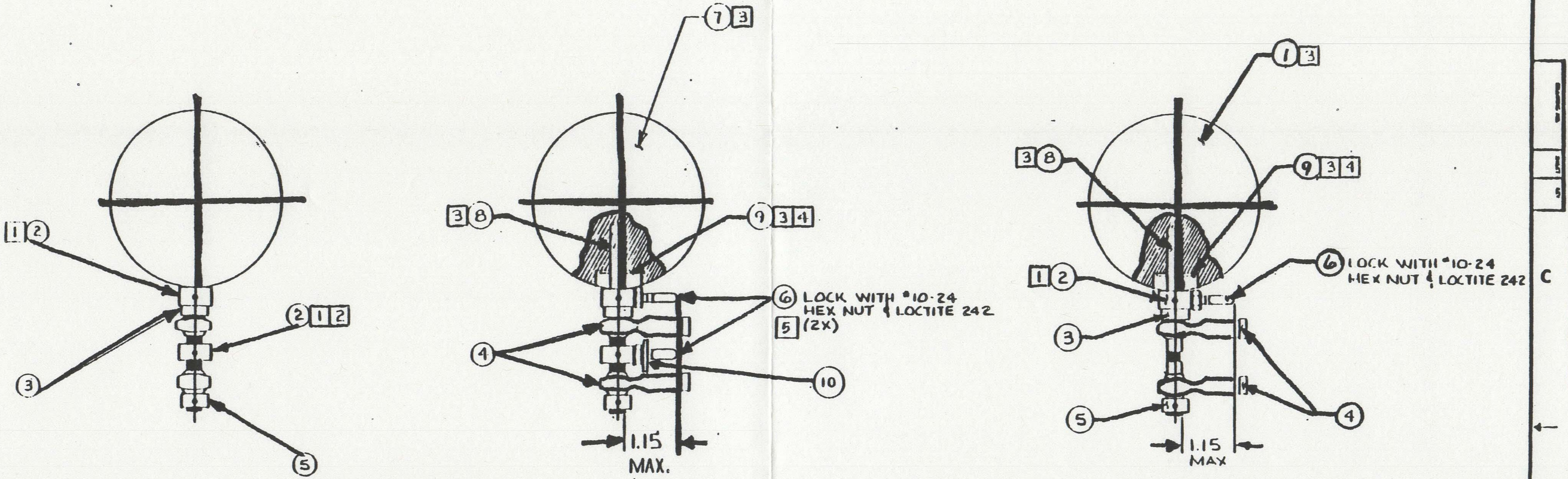

-10 VERSION
(STAGE RIGHT)

-20 VERSION
(STAGE LEFT)

HISTORY

NOTES:

1. ALIGN SET SCREW IN DRIVE COLLAR (ITEM 2) WITH FLATS ON PIVOT SHAFT (ITEM 8). USE LOCTITE ON SET SCREWS.
2. CENTER BETWEEN ROD ENDS AFTER MOUNTING TO HEAD MECH PLATE (ASSY NO. 00-0044).
3. EPOXY SHAFT (ITEM 8) TO EYEBALL (ITEM 7) WITH SPRING PIN (ITEM 9) FLUSH TO BOTTOM OF MILLED SLOT AS SHOWN.
4. BACK FILL SLOT TO ENCAPSULATE SPRING PIN (ITEM 9), FILL SLOT COMPLETELY.
5. CUT (ITEM 6) BH 800 002 TO 1.31" 2 PLACES

OUTSTANDING ECNs

00-0044	
NEXT ASSY	USED ON
APPLICATION	

MATERIAL

FINISH

DO NOT SCALE DRAWING

DRAWN BY 7/11/79 DATE
Bradley E Root

CHECKED 7/23/79

ENGINEER

PROJECT ENGINEER

MFG ENGINEER

Pizza Time Theatre Inc.
10060 Bubb Road
Cupertino, CA 95014

TITLE
EYEBALL ASSEMBLY

SIZE D
DRAWING NO 00-0043
REV C
SCALE FULL
SHEET 1 OF 2

C	0123	[illegible] HARDWARE CHANGED	[illegible]	RH
D	0183	ADDED ITEMS 9 AND 10. ITEM 1 WAS [illegible]	[illegible]	[illegible]
E	1042	[illegible] HARDWARE FOR ITEM 1	[illegible]	FTH
F	1065	ITEM 4 WAS 00-0016-20 ITEM 4 IS 00-0016-30	[illegible]	FTH

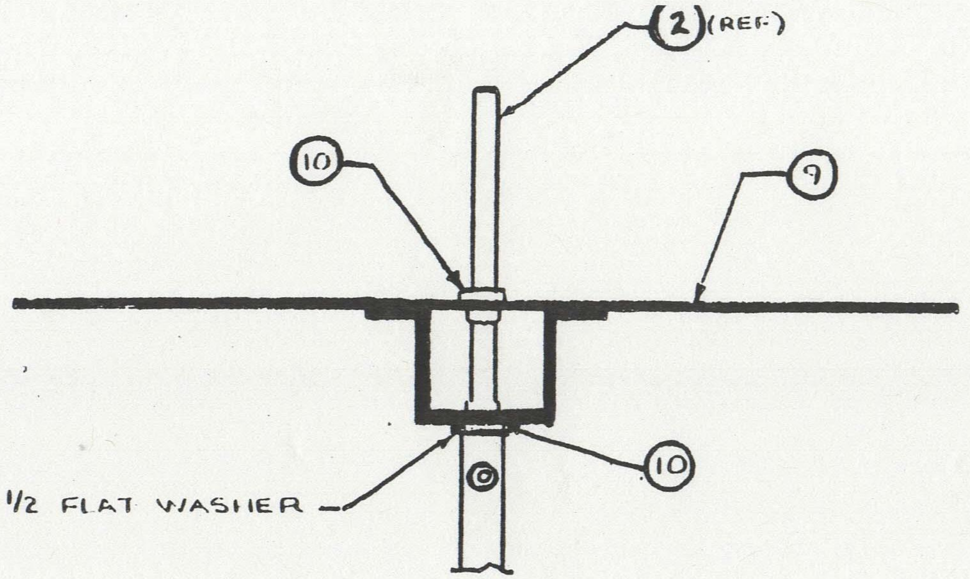

2 (REF)
10
9
10
*1/2 FLAT WASHER

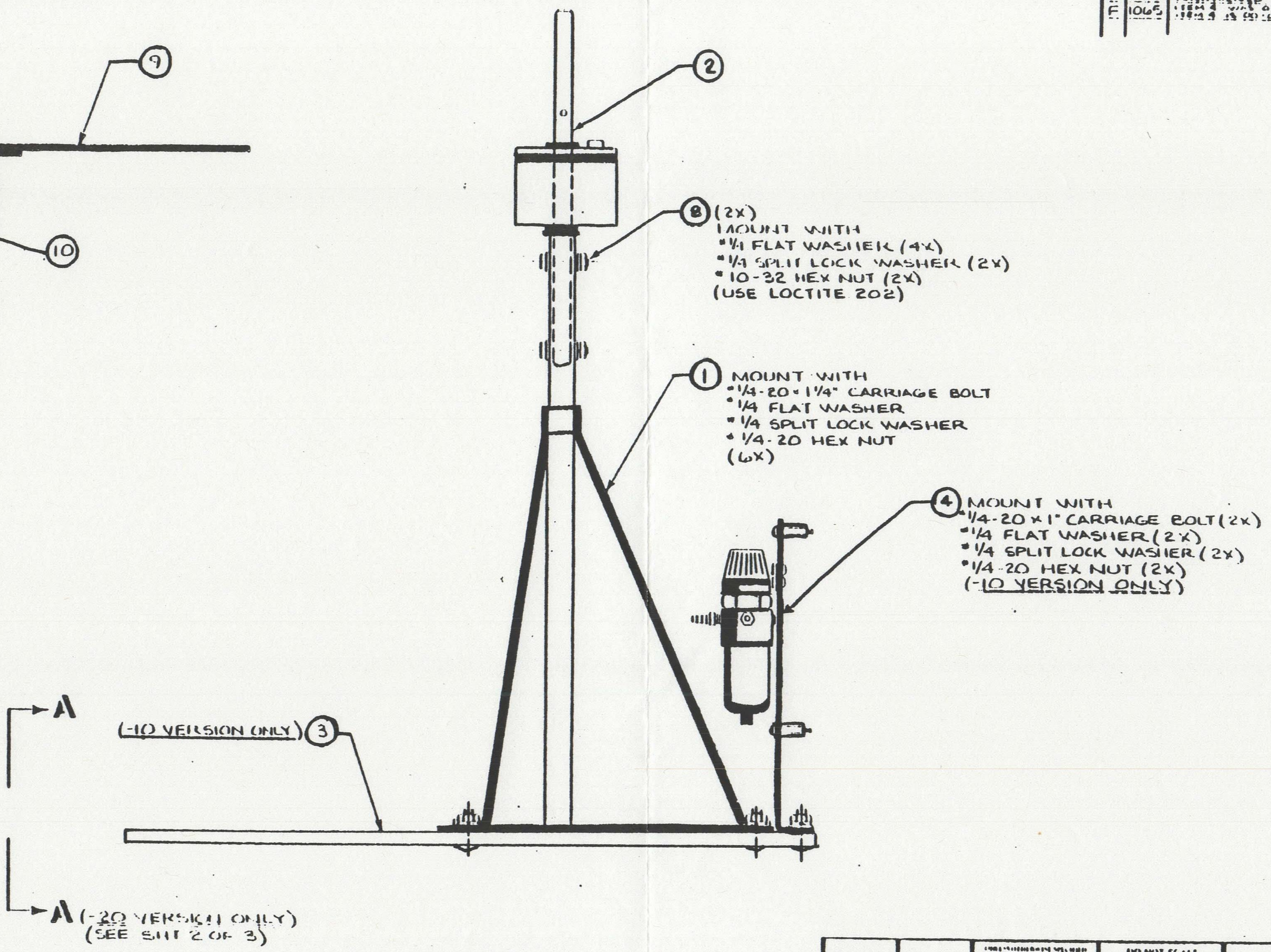

2
8 (2X)
MOUNT WITH
*1/4 FLAT WASHER (4X)
*1/4 SPLIT LOCK WASHER (2X)
*10-32 HEX NUT (2X)
(USE LOCTITE 202)
1
MOUNT WITH
*1/4-20 × 1 1/4" CARRIAGE BOLT
*1/4 FLAT WASHER
*1/4 SPLIT LOCK WASHER
*1/4-20 HEX NUT
(6X)
4
MOUNT WITH
*1/4-20 × 1" CARRIAGE BOLT (2X)
*1/4 FLAT WASHER (2X)
*1/4 SPLIT LOCK WASHER (2X)
*1/4-20 HEX NUT (2X)
(-10 VERSION ONLY)
A
(-10 VERSION ONLY) 3
A (-20 VERSION ONLY)
(SEE SHT 2 OF 3)

-10 & -20 VERSIONS

OUTSTANDING ECNs

00-0046

DO NOT SCALE DRAWING

DRAWN BY L FORTE 4/1/81

MATERIAL SEE L/M

Pizza Time Theatre Inc
1213 Innsbruck Dr
Sunnyvale, CA 94086

TITLE BASE SUPPORT ASSEMBLY

SIZE D 00-0236 REV F

SCALE 1/2 SHEET 1 OF 3

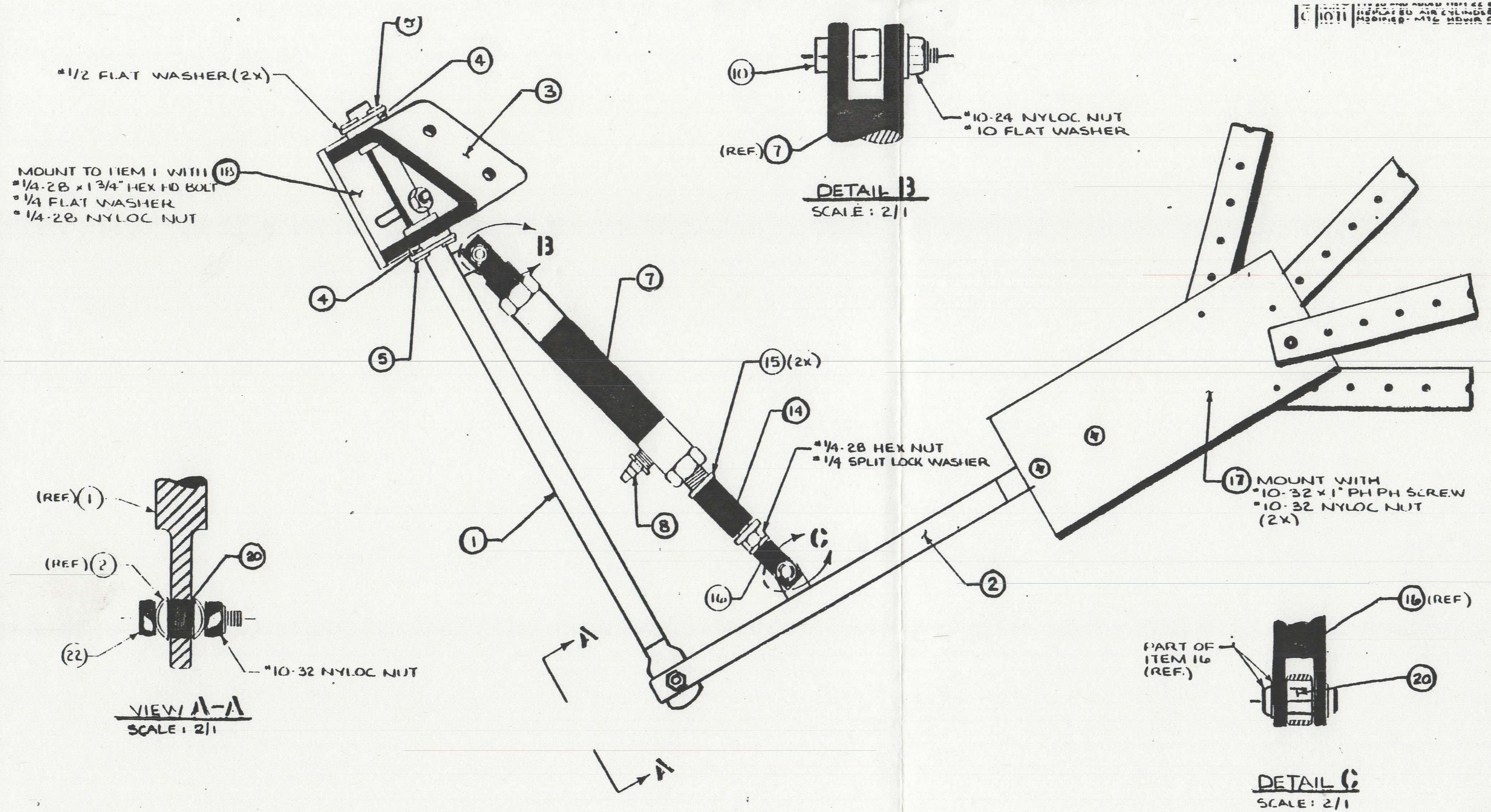

D
C
B
A
*1/2 FLAT WASHER (2X)
5
4
3
MOUNT TO ITEM 1 WITH
*1/4-28 × 1 3/4" HEX HD BOLT
*1/4 FLAT WASHER
*1/4-28 NYLOC NUT
18
19
4
5
B
7
15 (2X)
14
*1/4-28 HEX NUT
*1/4 SPLIT LOCK WASHER
8
1
16
C
2
17
MOUNT WITH
*10-32 × 1" PH PH SCREW
*10-32 NYLOC NUT
(2X)
A
A
10
*10-24 NYLOC NUT
*10 FLAT WASHER
(REF.) 7
(REF.) 1
(REF.) 2
20
22
*10-32 NYLOC NUT
16 (REF.)
PART OF
ITEM 16
(REF.)
20

DETAIL B
SCALE: 2/1

VIEW A-A
SCALE: 2/1

DETAIL C
SCALE: 2/1

NOTES:

1. WHEN BOLT OR SCREW LENGTHS SPECIFIED ARE NOT AVAILABLE, USE NEXT AVAILABLE SIZE, SO THAT FROM 1 1/2 TO 6 THREADS REMAIN EXPOSED AFTER MOUNTING NUTS ARE TIGHTENED IN ORDER TO PASS INSPECTION. (3 THREADS SHOWING BEING THE AMOUNT DESIRED.)

C | 10 11 | REPLACED AIR CYLINDER. ARM RODS MODIFIED - M16 HDWR CHANGED | F.T.

OUTSTANDING ECNs

D00910

DO NOT SCALE DRAWING

L. FURTE

MATERIAL
SEE L/M

Pizza Time Theatre Inc
1213 Innsbruck Dr
Sunnyvale, CA 94086

STAGE RIGHT
ARM ASSEMBLY-
POWER UP

D
00-0239
C
1/1
1 of 2

A4.3-1

A	0793	PRODUCTION RELEASE	3-19-81	[illegible]

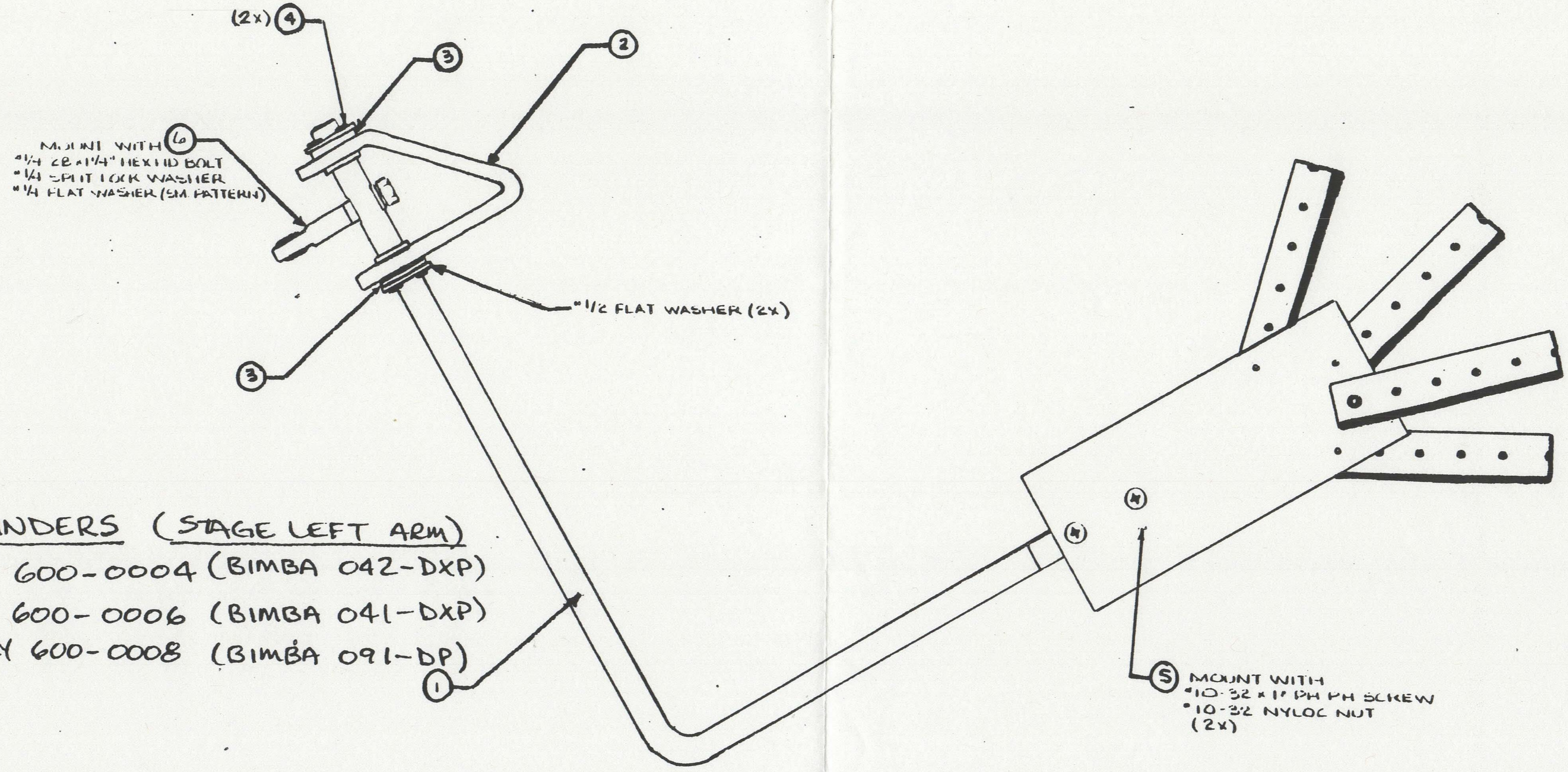
(2x) ④
③
②
MOUNT WITH ⑥
#1/4 28 × 1 1/4" HEX HD BOLT
#1/4 SPLIT LOCK WASHER
#1/4 FLAT WASHER (SM. PATTERN)
#1/2 FLAT WASHER (2X)
③
①
⑤ MOUNT WITH
#10-32 × 1" PH PH SCREW
#10-32 NYLOC NUT
(2X)
④
④

AIR CYLINDERS (STAGE LEFT ARM)

MUNCH	600-0004	(BIMBA 042-DXP)
JASPER	600-0006	(BIMBA 041-DXP)
PASQUALLY	600-0008	(BIMBA 091-DP)

OUTSTANDING ECNs

00 0046 B

SEE L/M

DO NOT SCALE DRAWING

I FORTE 7/30/81

3/4/81

Pizza Time Theatre Inc
1213 Innsbruck Dr
Sunnyvale, CA 94086

STAGE RIGHT
ARM ASSEMBLY-
FIXED ROTATE

D 00-0238 A

1/1 1 of 2

34.2-1

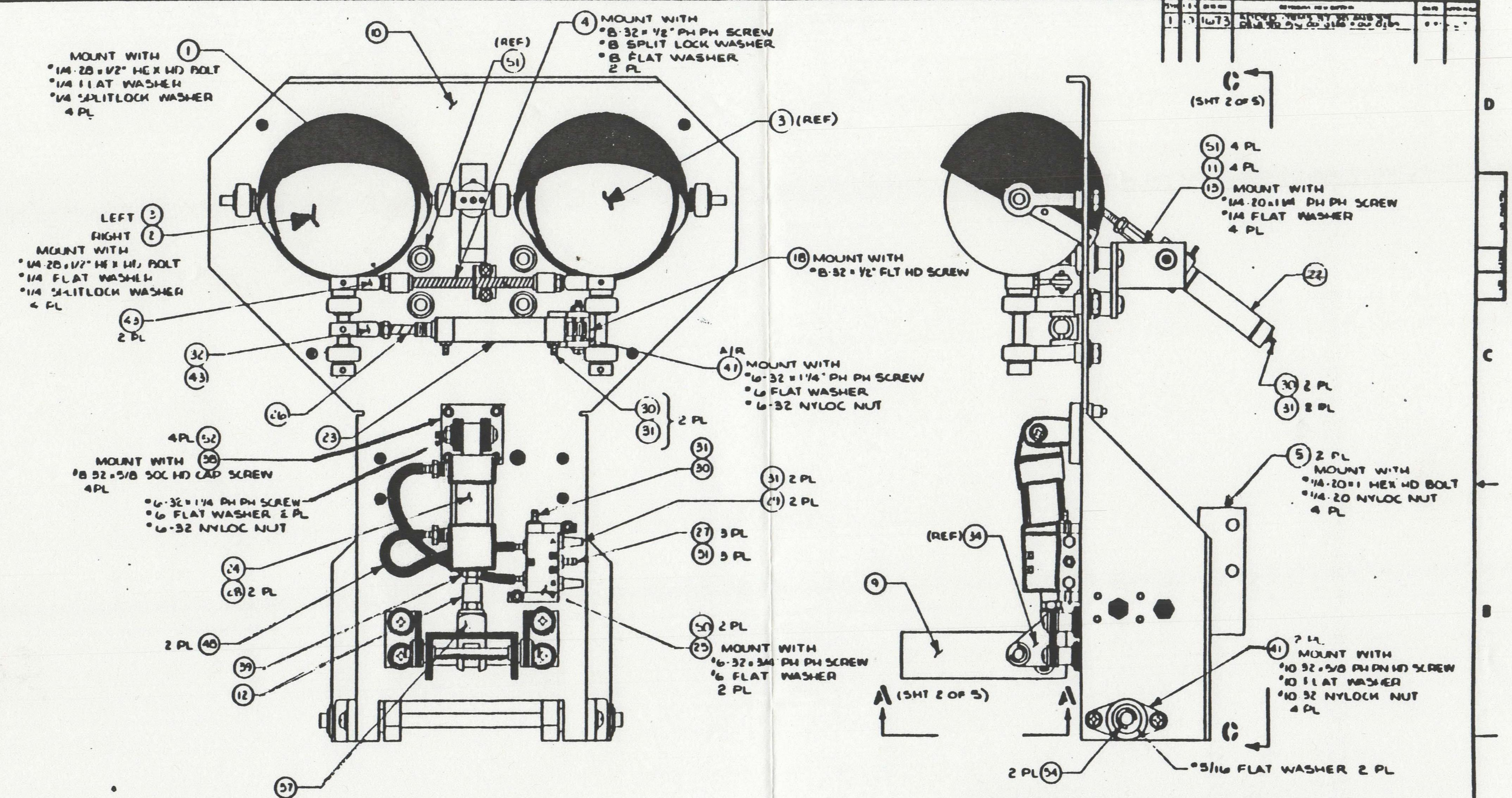
MOUNT WITH ①
•1/4-20 × 1/2" HEX HD BOLT
•1/4 FLAT WASHER
•1/4 SPLITLOCK WASHER
4 PL
⑩
(REF) (51)
④ MOUNT WITH
•8-32 × 1/2" PH PH SCREW
•8 SPLIT LOCK WASHER
•8 FLAT WASHER
2 PL
③ (REF)
C (SHT 2 OF 5)
LEFT ③
RIGHT ②
MOUNT WITH
•1/4-20 × 1/2" HEX HD BOLT
•1/4 FLAT WASHER
•1/4 SPLITLOCK WASHER
4 PL
(43) 2 PL
(32)
(43)
(18) MOUNT WITH
•8-32 × 1/2" FLT HD SCREW
AIR (41) MOUNT WITH
•6-32 × 1 1/4" PH PH SCREW
•6 FLAT WASHER
•6-32 NYLOC NUT
(26)
(23)
(30) (31) 2 PL
4 PL (52)
MOUNT WITH (38)
•8-32 × 5/8 SOC HD CAP SCREW
4 PL
•6-32 × 1/4 PH PH SCREW
•6 FLAT WASHER 2 PL
•6-32 NYLOC NUT
(31)
(30)
(31) 2 PL
(21) 2 PL
(27) 3 PL
(31) 3 PL
(24)
(28) 2 PL
2 PL (48)
(39)
(12)
(50) 2 PL
(25) MOUNT WITH
•6-32 × 3/4 PH PH SCREW
•6 FLAT WASHER
2 PL
(37)
(51) 4 PL
(11) 4 PL
(13) MOUNT WITH
•1/4-20 × 1/4 PH PH SCREW
•1/4 FLAT WASHER
4 PL
(22)
(30) 2 PL
(31) 2 PL
(5) 2 PL
MOUNT WITH
•1/4-20 × 1 HEX HD BOLT
•1/4-20 NYLOC NUT
4 PL
(REF) (34)
⑨
A (SHT 2 OF 5)
A
(41) 2 PL
MOUNT WITH
•10-32 × 5/8 PH PH HD SCREW
•10 FLAT WASHER
•10-32 NYLOCK NUT
4 PL
C
2 PL (34)
•5/16 FLAT WASHER 2 PL
D
C
B
A
8 7 6 5 4 3 2 1

NOTES:

WHEN BOLT OR SCREW LENGTHS SPECIFIED ARE NOT AVAILABLE, USE NEXT AVAILABLE SIZE SO THAT FROM 1/2 TO 6 THREADS REMAIN EXPOSED AFTER MTG HARDWARE IS TIGHTENED IN ORDER TO PASS INSPECTION (3 THREADS SHOWING BEING THE AMOUNT DESIRED

CHARACTER HEAD STANDOFF 800-0094-01

-10	000 0046
-10	000 0046
-10	000-0044

SEE L/M

A POGUE 4-29-83

L FORTE 7/5/83

HEAD ASSY·
STANDARD

D 000 0044 10

1/1

NEW

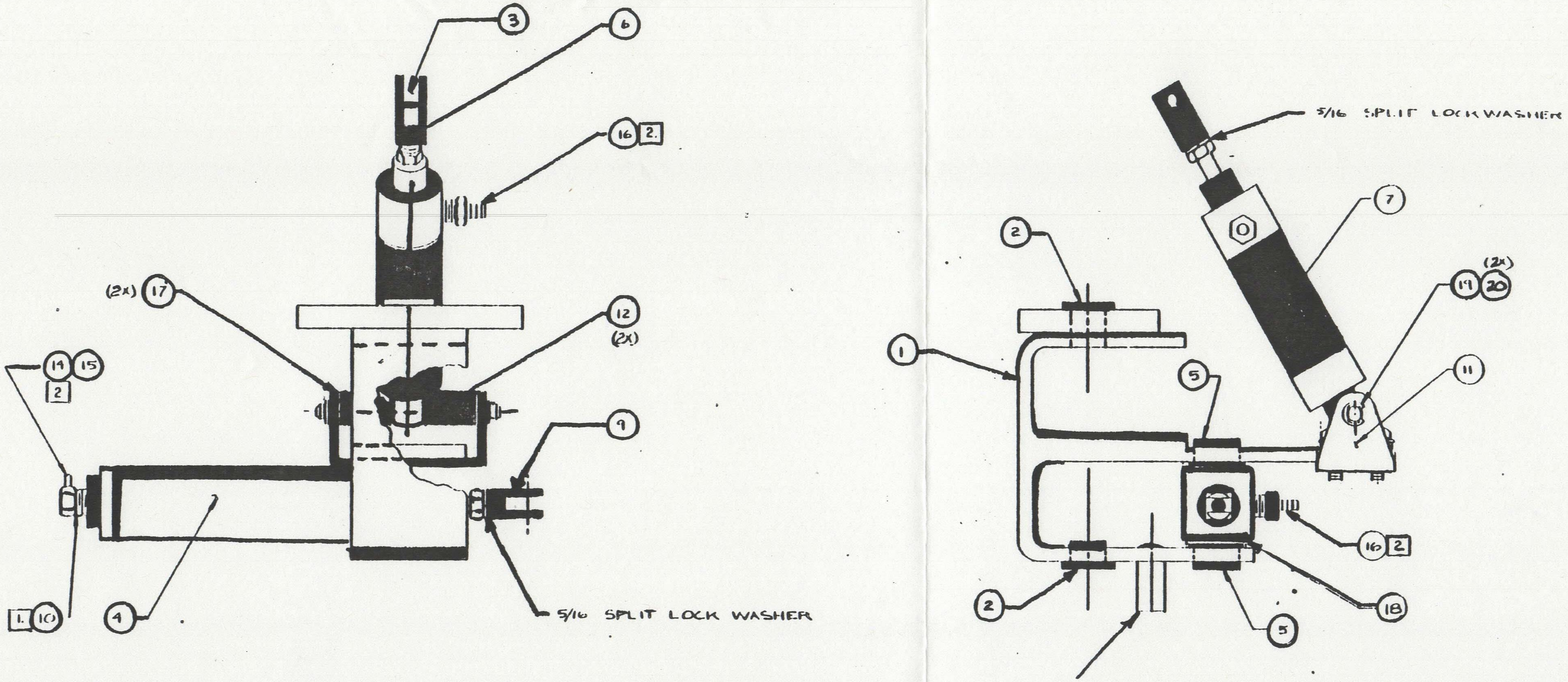
3
6
16 2.
(2x) 17
12 (2x)
14 15 2
9
1. 10
4
5/16 SPLIT LOCK WASHER
5/16 SPLIT LOCKWASHER
7
2
(2x) 19 20
1
5
11
16 2
18
2
5

-10 VERSION
(ROTATE TILT)

[1] USE RUBBER WASHER 630-0033 01 ON ITEM 10, DO NOT USE FIBER OR NYLON WASHERS

[2.] ON ITEM 14 & 16 USE PIPE SEALANT

3. IF ALL BOLTS OR SCREWS LENGTHS SPECIFIED ARE NOT AVAILABLE USE NEXT CLOSEST SIZE SO THAT 1½ TO 6 THREADS SHOW THROUGH ON HEX NUTS OR NYLOCK NUTS (3 THREADS BEING THE AMOUNT DESIRED) IN ORDER TO PASS INSPECTION

OUTSTANDING ECNs

	00-0046
NEXT ASSY	USED ON
APPLICATION	

MATERIAL
SEE L/M

DO NOT SCALE DRAWING

DRAWN BY D ADAMS DATE 2/1/8.
CHECKED TIBBS 2/4/8.
ENGINEER
PROJECT ENGINEER
MFG ENGINEER

Pizza Time Theatre Inc
1213 Innsbruck Dr
Sunnyvale, CA 94086

TITLE
YOKE ASSEMBLY

SIZE D DRAWING NO 00-0268 REV B
SCALE FULL SHEET 1 of 2

A4.1-1

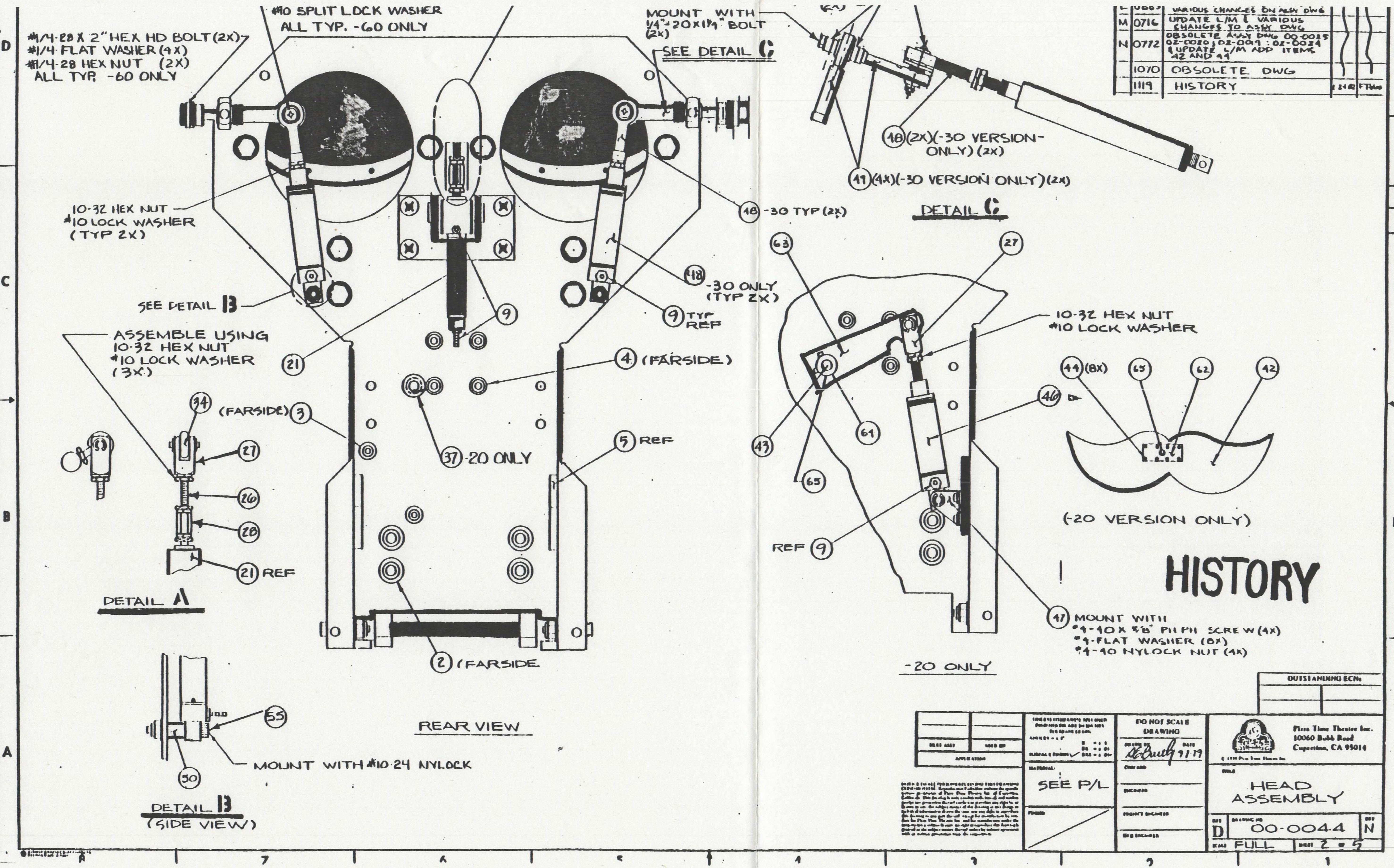
#1/4-28 X 2" HEX HD BOLT (2X)
#1/4 FLAT WASHER (4X)
#1/4-28 HEX NUT (2X)
ALL TYP. -60 ONLY
#10 SPLIT LOCK WASHER
ALL TYP. -60 ONLY
MOUNT WITH
1/4"-20X1 1/4" BOLT
(2X)
SEE DETAIL C
10-32 HEX NUT
#10 LOCK WASHER
(TYP 2X)
SEE DETAIL B
ASSEMBLE USING
10-32 HEX NUT
#10 LOCK WASHER
(3X)
18 -30 TYP (2X)
18 -30 ONLY
(TYP 2X)
9
9 TYP REF
21
4 (FARSIDE)
34
(FARSIDE) 3
27
26
28
21 REF
37 -20 ONLY
5 REF
2 (FARSIDE
DETAIL A
55
50
MOUNT WITH #10-24 NYLOCK
DETAIL B
(SIDE VIEW)
REAR VIEW
18 (2X)(-30 VERSION-ONLY) (2X)
41 (4X)(-30 VERSION ONLY)(2X)
DETAIL C
63
27
10-32 HEX NUT
#10 LOCK WASHER
44 (8X)
65
62
42
46
43
61
65
REF 9
(-20 VERSION ONLY)
47 MOUNT WITH
#4-40 X 5/8" PH PH SCREW (4X)
#4-FLAT WASHER (8X)
#4-40 NYLOCK NUT (4X)
-20 ONLY
D
C
B
A
8
7
6
5
4
3
2
1

L	0069	VARIOUS CHANGES ON ASSY DWG		
M	0716	UPDATE L/M & VARIOUS CHANGES TO ASSY DWG		
N	0772	OBSOLETE ASSY DWG 00-0025 02-0020, 02-0019 : 02-0024 & UPDATE L/M ADD ITEMS 42 AND 44		
	1070	OBSOLETE DWG		
	1119	HISTORY	1 24 02	FTH

HISTORY

OUTSTANDING ECNs

NEXT ASSY | USED ON

APPLICATION

DO NOT SCALE DRAWING

DRAWN BY DC Bush DATE 9.1.79

CHECKED

MATERIAL: SEE P/L

FINISH

Pizza Time Theatre Inc.
10060 Bubb Road
Cupertino, CA 95014

TITLE
HEAD ASSEMBLY

SIZE D | DRAWING NO 00-0044 | REV N

SCALE FULL | SHEET 2 of 5

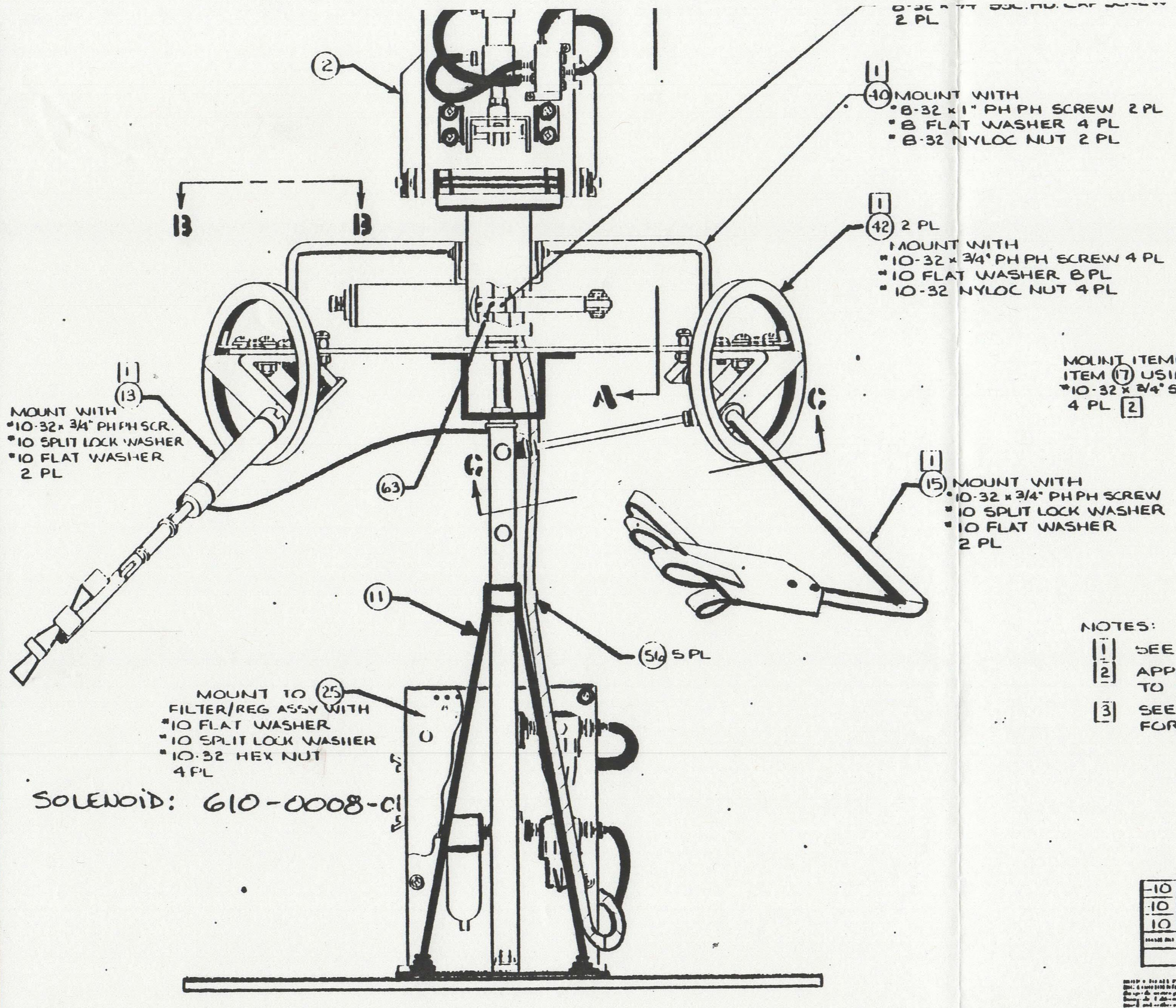
2 PL
(2)
(10) MOUNT WITH
*8-32 x 1" PH PH SCREW 2 PL
*8 FLAT WASHER 4 PL
*8-32 NYLOC NUT 2 PL
B
B
(42) 2 PL
MOUNT WITH
*10-32 x 3/4" PH PH SCREW 4 PL
*10 FLAT WASHER 8 PL
*10-32 NYLOC NUT 4 PL
(13)
MOUNT WITH
*10-32 x 3/4" PH PH SCR.
*10 SPLIT LOCK WASHER
*10 FLAT WASHER
2 PL
A
C
C
(63)
(15) MOUNT WITH
*10-32 x 3/4" PH PH SCREW
*10 SPLIT LOCK WASHER
*10 FLAT WASHER
2 PL
(11)
(56) 5 PL
MOUNT TO (25)
FILTER/REG ASSY WITH
*10 FLAT WASHER
*10 SPLIT LOCK WASHER
*10-32 HEX NUT
4 PL
SOLENOID: 610-0008-C1

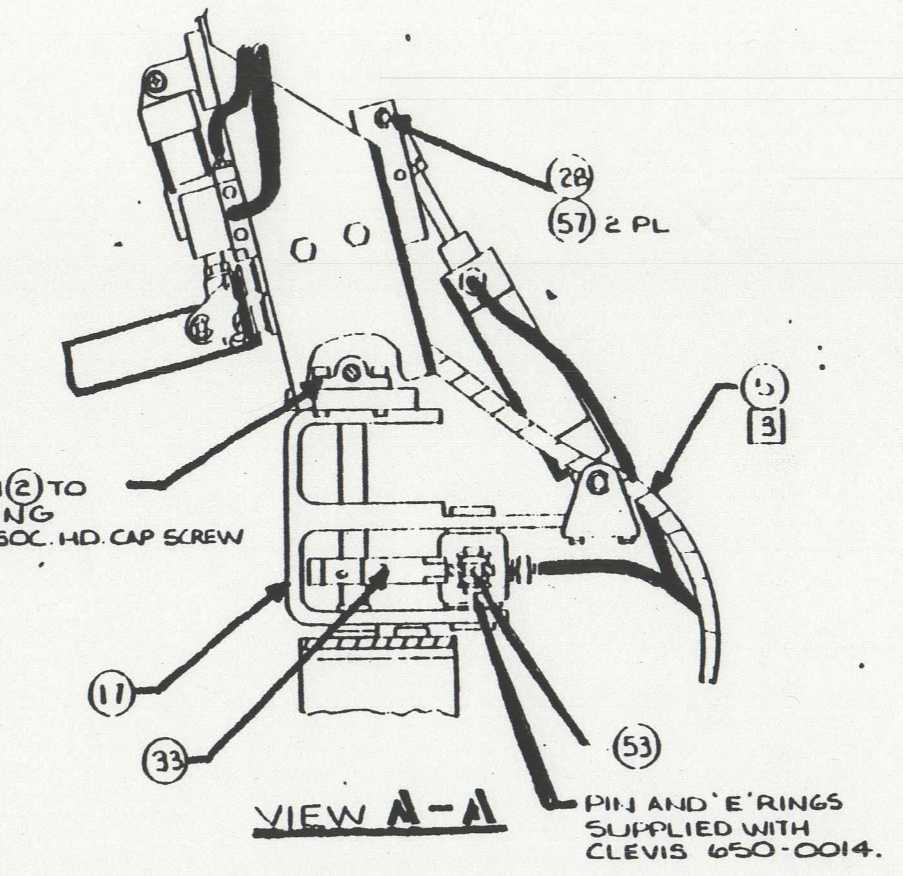
(28)
(57) 2 PL
(5) 3
MOUNT ITEM (2) TO
ITEM (17) USING
*10-32 x 3/4" SOC. HD. CAP SCREW
4 PL 2
(17)
(33)
(53)
PIN AND 'E' RINGS
SUPPLIED WITH
CLEVIS 650-0014.
VIEW A-A

NOTES:

1. SEE VIEW B-B FOR MOUNTING HOLES USED
2. APPLY LOCTITE #601 TO MTG. SCREW PRIOR TO INSTALLATION.
3. SEE 00-0087-10, AIRLINE ASSY - CEC DRAWING FOR PROPER CONNECTION OF AIRLINES.

-10	00-0227
-10	00-0117
10	00-0068
DASH NO	NEXT ASSY NO
USED ON	

ITEM	DESCRIPTION/MATERIAL	QTY

MATERIAL: SEE L/M

DO NOT SCALE DRAWING

DRAWN BY: L. FORTE DATE: 7/12/82

Pizza Time Theatre Inc.
1213 Innsbruck Dr.
Sunnyvale, CA 94089

TITLE: CHAR. MECH. FINAL ASSY - CEC / GUEST

SIZE: D
DRAWING NO: 00-0046-10
REV: R
SCALE: 1/2

A2.1-1

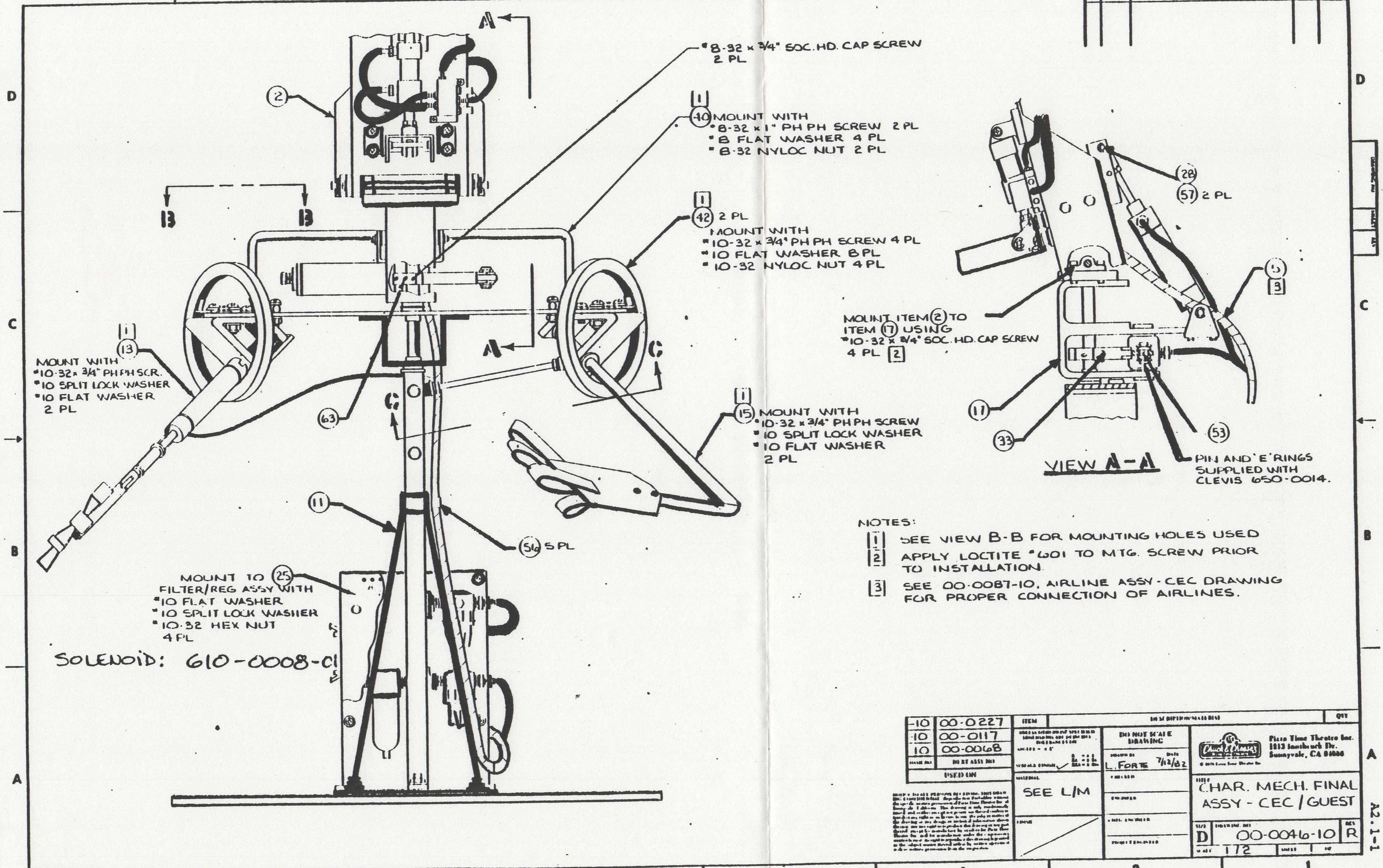

*8-32 x 3/4" SOC. HD. CAP SCREW
2 PL

[1]
(10) MOUNT WITH
*8-32 x 1" PH PH SCREW 2 PL
*8 FLAT WASHER 4 PL
*8-32 NYLOC NUT 2 PL

[1]
(42) 2 PL
MOUNT WITH
*10-32 x 3/4" PH PH SCREW 4 PL
*10 FLAT WASHER 8 PL
*10-32 NYLOC NUT 4 PL

[1]
(13)
MOUNT WITH
*10-32 x 3/4" PH PH SCR.
*10 SPLIT LOCK WASHER
*10 FLAT WASHER
2 PL

[1]
(15) MOUNT WITH
*10-32 x 3/4" PH PH SCREW
*10 SPLIT LOCK WASHER
*10 FLAT WASHER
2 PL

(56) 5 PL

MOUNT TO (25)
FILTER/REG ASSY WITH
*10 FLAT WASHER
*10 SPLIT LOCK WASHER
*10-32 HEX NUT
4 PL

SOLENOID: 610-0008-C1

(28)
(57) 2 PL

(5)
[3]

MOUNT ITEM (2) TO
ITEM (17) USING
*10-32 x 3/4" SOC. HD. CAP SCREW
4 PL [2]

PIN AND 'E' RINGS
SUPPLIED WITH
CLEVIS 650-0014.

NOTES:

[1] SEE VIEW B-B FOR MOUNTING HOLES USED

[2] APPLY LOCTITE #601 TO MTG. SCREW PRIOR TO INSTALLATION.

[3] SEE 00-0087-10, AIRLINE ASSY-CEC DRAWING FOR PROPER CONNECTION OF AIRLINES.

-10	00-0227
-10	00-0117
10	00-0068
	NEXT ASSY NO
USED ON	

ITEM | QTY

DO NOT SCALE DRAWING

DRAWN BY L. FORTE DATE 7/12/82

MATERIAL SEE L/M

Pizza Time Theatre Inc.
1213 Innsbruck Dr.
Sunnyvale, CA 94086

TITLE CHAR. MECH. FINAL ASSY - CEC / GUEST

SIZE D DRAWING NO. 00-0046-10 REV R

SCALE 1/2

A2.1-1

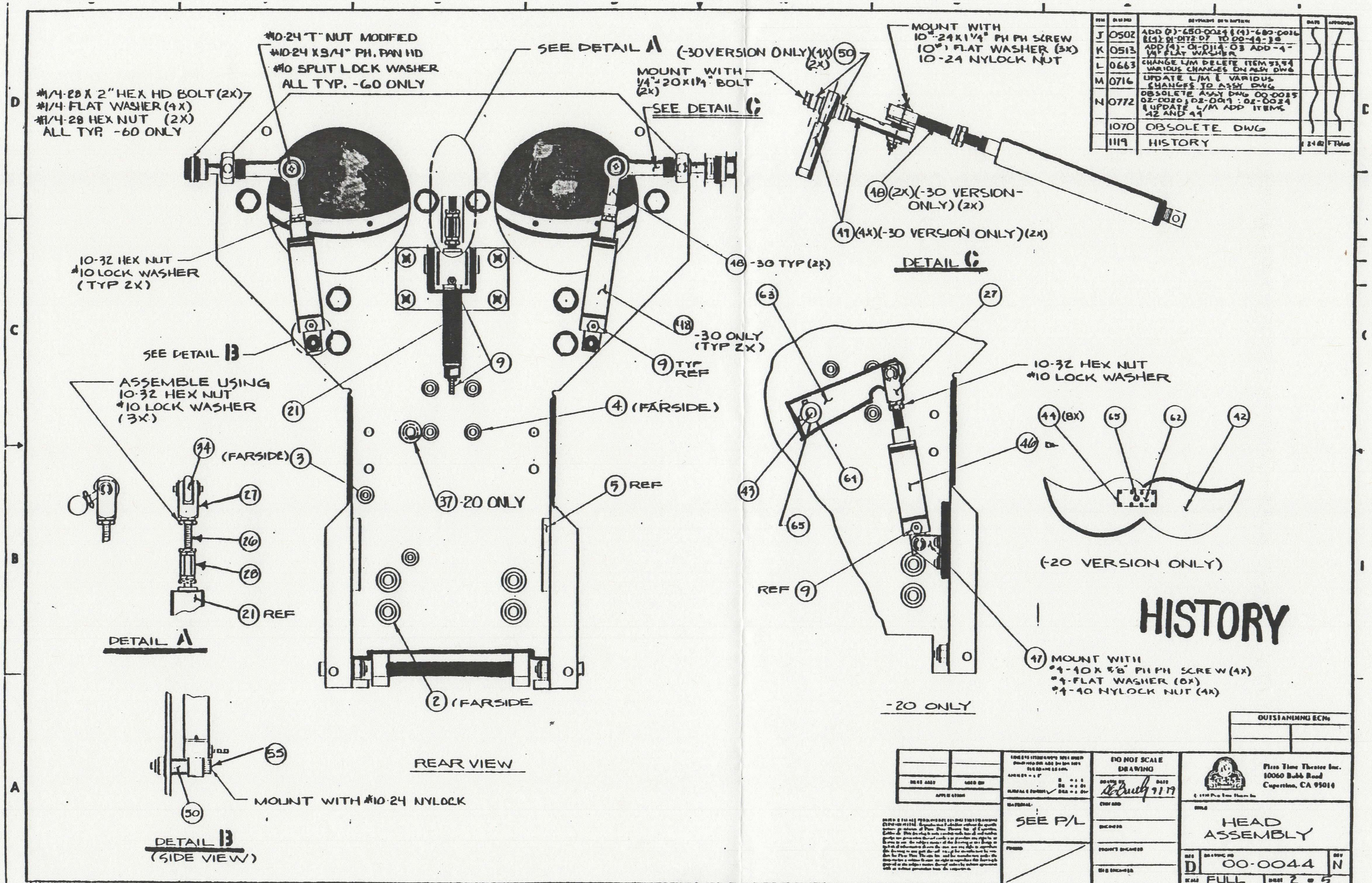
#10-24 "T" NUT MODIFIED
#10-24 X 3/4" PH. PAN HD
#10 SPLIT LOCK WASHER
ALL TYP. -60 ONLY
SEE DETAIL A
#1/4-28 X 2" HEX HD BOLT (2X)
#1/4 FLAT WASHER (4X)
#1/4-28 HEX NUT (2X)
ALL TYP. -60 ONLY
SEE DETAIL C
10-32 HEX NUT
#10 LOCK WASHER
(TYP 2X)
48 -30 TYP (2X)
48 -30 ONLY (TYP 2X)
SEE DETAIL B
9
9 TYP REF
21
4 (FARSIDE)
ASSEMBLE USING
10-32 HEX NUT
#10 LOCK WASHER
(3X)
34
(FARSIDE) 3
27
26
28
21 REF
53
37 -20 ONLY
5 REF
2 (FARSIDE
DETAIL A
REAR VIEW
55
50
MOUNT WITH #10-24 NYLOCK
DETAIL B
(SIDE VIEW)
(-30 VERSION ONLY)(1X) 50
(2X)
MOUNT WITH
1/4"-20 X 1 1/4" BOLT
(2X)
MOUNT WITH
10"-24 X 1 1/4" PH PH SCREW
10" FLAT WASHER (3X)
10-24 NYLOCK NUT
18 (2X)(-30 VERSION-ONLY) (2X)
41 (4X)(-30 VERSION ONLY)(2X)
DETAIL C
63
27
10-32 HEX NUT
#10 LOCK WASHER
43
61
65
REF 9
46
47 MOUNT WITH
#4-40 X 5/8" PH PH SCREW (4X)
#4-FLAT WASHER (8X)
#4-40 NYLOCK NUT (4X)
-20 ONLY
44 (8X)
65
62
42
(-20 VERSION ONLY)
HISTORY
D
C
B
A
7
6
5
4
3
2
1

REV	ECN NO	REVISION DESCRIPTION	DATE	APPROVED
J	0502	ADD (2)-650-0024 & (4)-680-0016 & (4) 01-0172-07 TO 00-44-30		
K	0513	ADD (4)-01-0114-03 ADD -4- 1/4" FLAT WASHER		
L	0663	CHANGE L/M DELETE ITEM 53,54 VARIOUS CHANGES ON ASSY DWG		
M	0716	UPDATE L/M & VARIOUS CHANGES TO ASSY DWG		
N	0772	OBSOLETE ASSY DWG 00-0025 02-0020, 02-0019 : 02-0024 & UPDATE L/M ADD ITEMS 42 AND 44		
	1070	OBSOLETE DWG		
	1119	HISTORY	[illegible]	FTM

OUTSTANDING ECNs

DO NOT SCALE DRAWING

DATE 9/79

MATERIAL: SEE P/L

Pizza Time Theatre Inc.
10060 Bubb Road
Cupertino, CA 95014

HEAD ASSEMBLY

D | 00-0044 | N

FULL | 2 of 5

I	0466	CHANGE MOUNTING HARWARE ON ITEM-32		
		SEE SHT 2 OF 5		
A	0363	MANY CHANGES SEE ECO	[illegible]	[illegible]
B	0406	DELETED ITEMS 40, 41, & 42	2-11-80	[illegible]
C	0430	ADDED SPRING - ITEM 59	3-5-80	[illegible]
D	0445	ITEM 32 WAS CHANGED FROM 01-0241 TO 01-0363	4/3/80	[illegible]
E	0449	REMOVED ITEM 32 FROM L/H AND ADDED TO 0046 ASSY	4/4/80	[illegible]
F	0455	ADDED (2) SPACERS TO 00-0045 - EYEBALL CENTERING ASSY		[illegible]
G	0458	ITEM 19 - 610001 BRKT WAS CHANGED TO 01-0100 BRKT		[illegible]
H	0465	DELETE CLEVIS PIN - ADD ITEM 52 AND MOUNTING HARDWARE & REPLACE PN/01-0214 WITH 01-0186		

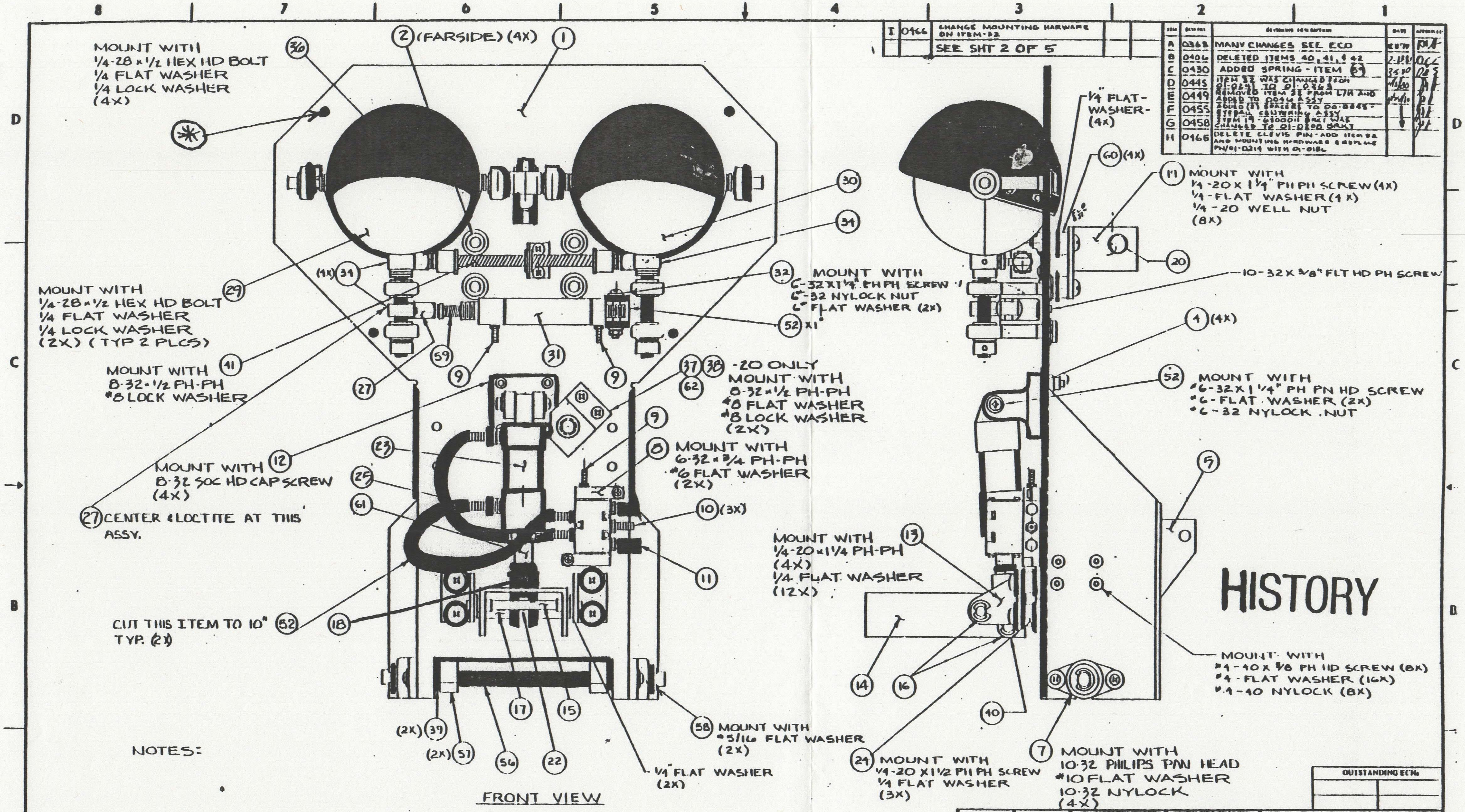
MOUNT WITH
1/4-28 x 1/2 HEX HD BOLT
1/4 FLAT WASHER
1/4 LOCK WASHER
(4X)
36
✱
2 (FARSIDE) (4X)
1
MOUNT WITH
1/4-28 x 1/2 HEX HD BOLT
1/4 FLAT WASHER
1/4 LOCK WASHER
(2X) (TYP 2 PLCS)
29
(4X) 34
MOUNT WITH
8-32 x 1/2 PH-PH
#8 LOCK WASHER
41
27
59
9
31
9
MOUNT WITH
8-32 SOC HD CAP SCREW
(4X)
12
27 CENTER & LOCTITE AT THIS ASSY.
23
25
61
CUT THIS ITEM TO 10" TYP. (2X)
52
18
(2X) 39
(2X) 57
56
22
17
15
1/4" FLAT WASHER
(2X)
58 MOUNT WITH
#5/16 FLAT WASHER
(2X)
FRONT VIEW
30
34
32 MOUNT WITH
6-32 X 1 1/4" PH PH SCREW
6-32 NYLOCK NUT
6" FLAT WASHER (2X)
52 X1
37 38 -20 ONLY
62
MOUNT WITH
8-32 x 1/2 PH-PH
#8 FLAT WASHER
#8 LOCK WASHER
(2X)
9
8 MOUNT WITH
6-32 x 3/4 PH-PH
#6 FLAT WASHER
(2X)
10 (3X)
11
1/4" FLAT-WASHER-(4X)
60 (4X)
11 MOUNT WITH
1/4-20 X 1 1/4" PH PH SCREW (4X)
1/4-FLAT WASHER (4X)
1/4-20 WELL NUT
(8X)
20
10-32 X 3/8" FLT HD PH SCREW
4 (4X)
52 MOUNT WITH
#6-32 X 1 1/4" PH PN HD SCREW
#6-FLAT WASHER (2X)
#6-32 NYLOCK NUT
5
MOUNT WITH
1/4-20 x 1 1/4 PH-PH
(4X)
1/4 FLAT WASHER
(12X)
13
14
16
40
MOUNT WITH
#4-40 X 3/8 PH HD SCREW (8X)
#4-FLAT WASHER (16X)
#4-40 NYLOCK (8X)
24 MOUNT WITH
1/4-20 X 1 1/2 PH PH SCREW
1/4 FLAT WASHER
(3X)
7 MOUNT WITH
10-32 PHILIPS PAN HEAD
#10 FLAT WASHER
10-32 NYLOCK
(4X)
HISTORY
8 7 6 5 4 3 2 1
D C B A

NOTES:

✱COSMETIC STANDOFFS P/N- 800-0094-01

OUTSTANDING ECNs

NEXT ASSY | USED ON
APPLICATION

DO NOT SCALE DRAWING

DRAWN BY DEBarty DATE 9-9-77
CHECKED
ENGINEER
PROJECT ENGINEER
MFG ENGINEER

MATERIAL: SEE P/L

FINISH

Pizza Time Theatre Inc
10060 Bubb Road
Cupertino, CA 95014

TITLE
HEAD ASSEMBLY

SIZE D | DRAWING NO 00-0044 | REV N
SCALE FULL | SHEET 1 of 5

A3.1-1

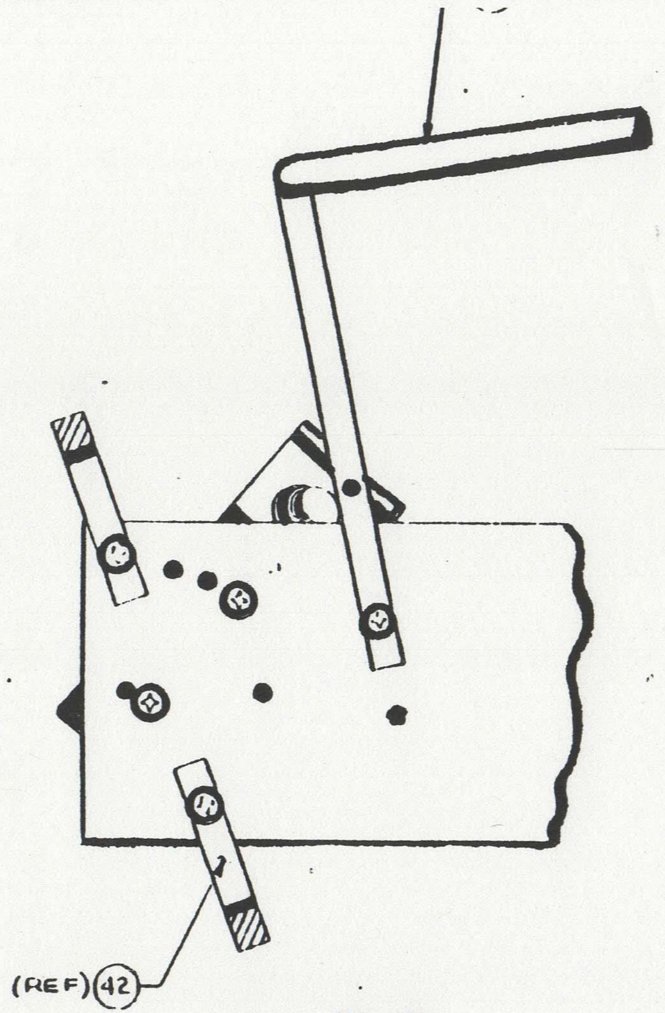

VIEW B-B
TYPICAL 2 PL
SCALE: 1/1

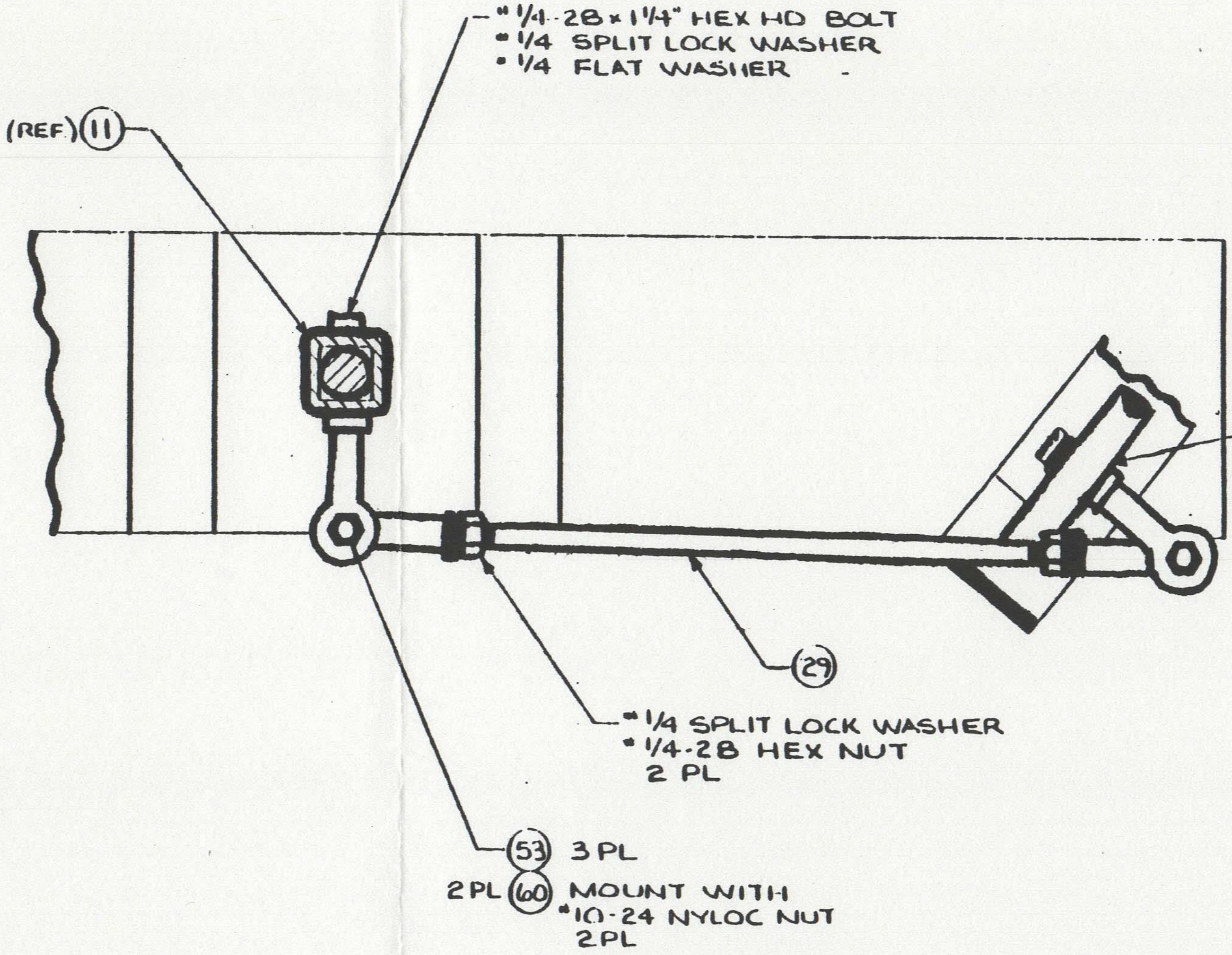
* 1/4-28 × 1 1/4" HEX HD BOLT
* 1/4 SPLIT LOCK WASHER
* 1/4 FLAT WASHER
(REF) 11
15 (REF.)
29
* 1/4 SPLIT LOCK WASHER
* 1/4-28 HEX NUT
2 PL
53 3 PL
2 PL 60 MOUNT WITH
* 10-24 NYLOC NUT
2 PL

VIEW C-C
SCALE: 1/1

ITEM	DESCRIPTION MATERIAL	QTY

NEXT ASSY NO
USED ON

DO NOT SCALE DRAWING

MATERIAL

FINISH

Pizza Time Theatre Inc.
1213 Innsbruck Dr.
Sunnyvale, CA 94089

TITLE
CHAR. MECH. FINAL
ASSY-CEC/GUEST

SIZE D
DRAWING NO. 00-0046-10
REV R
SCALE 1/2
SHEET 2 OF

BEAGLES OR BEACH BOWZERS MAP

TB1#	GEORGE FRONT LEFT HEADER 1 to 14	JOHN FRONT RIGHT HEADER 2 to 14	PAUL REAR LEFT HEADER 3 to 14	RINGO REAR RIGHT HEADER 4 to 14
1&2	MOUTH	MOUTH	MOUTH	MOUTH
3&4	BODY	BODY	BODY	BODY
5&6	HEAD RIGHT	HEAD RIGHT	HEAD RIGHT	
7&8	HEAD LEFT	HEAD LEFT	HEAD LEFT	
9&10	HAND	MIKE		LEFT HAND
11&12		FOOT		RIGHT HAND
13&14				
15&16				

TB2#	
1&2	CLEAR SPOT
	J
3&4	CLEAR SPOT
5&6	
7&8	
9&10	
11&12	

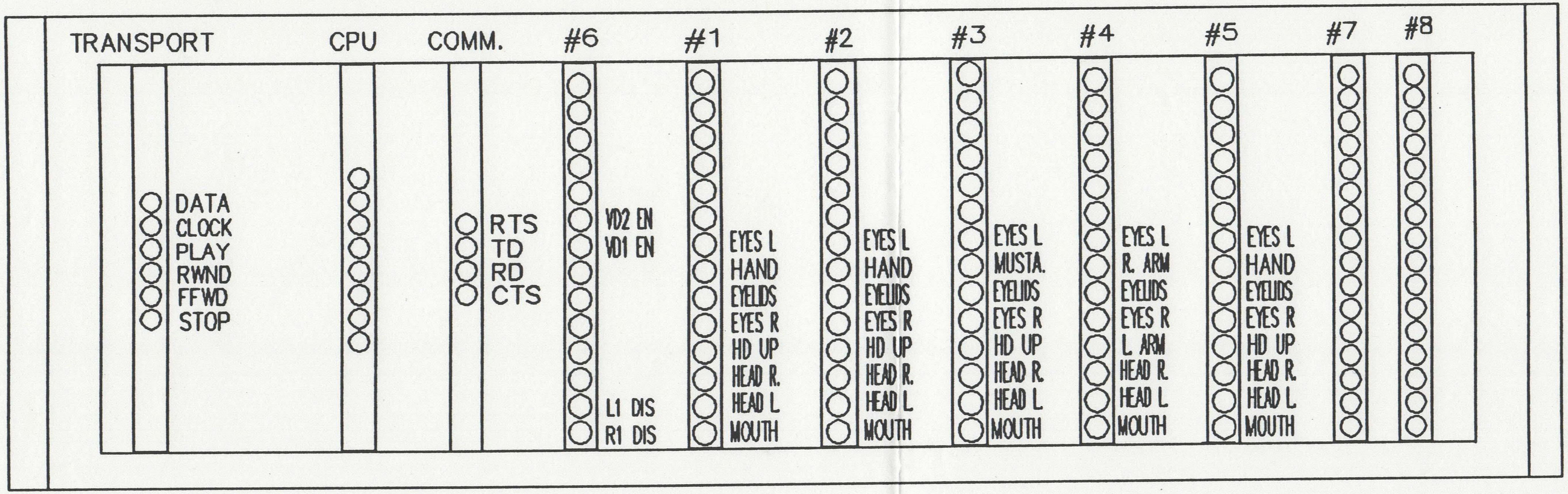
TRANSPORT
CPU
COMM.
#6
#1
#2
#3
#4
#5
#7
#8
DATA
CLOCK
PLAY
RWND
FFWD
STOP
RTS
TD
RD
CTS
VD2 EN
VD1 EN
L1 DIS
R1 DIS
EYES L
HAND
EYELIDS
EYES R
HD UP
HEAD R.
HEAD L
MOUTH
EYES L
HAND
EYELIDS
EYES R
HD UP
HEAD R.
HEAD L
MOUTH
EYES L
MUSTA.
EYELIDS
EYES R
HD UP
HEAD R.
HEAD L.
MOUTH
EYES L
R. ARM
EYELIDS
EYES R
L. ARM
HEAD R.
HEAD L.
MOUTH
EYES L
HAND
EYELIDS
EYES R
HD UP
HEAD R.
HEAD L.
MOUTH

HEADER #1: CHUCK E. CHEESE
HEADER #2: JASPER
HEADER #3: PAQUALLY
HEADER #4: MUNCH
HEADER #5: HELEN
HEADER #6: A/V SWITCHER CARD
HEADER #7: FRONT LIGHTBAR
HEADER #8: BACK LIGHTBAR

NOTE: COMM. CARD IS USED IN THE COMBO SYSTEMS ONLY

SUBJECT: CEC CARDCAGE LAYOUT
DRAWN BY: FARSHID KHOSHGAM
DATE: 10/17/90

	HEADER #1	HEADER #2	HEADER #3	HEADER #4	HEADER #5	HEADER #6	HEADER #7	HEADER #8	
TERMINAL #	CHUCK	JASPER	PASQUALLY	MUNCH	HELEN	A/V CONTROLLER	FRONT LIGHTS	BACK LIGHTS	LED
TB1, 1-2	MOUTH	MOUTH	MOUTH	MOUTH	MOUTH	AUDSEL 1	CLAP	HELEN	1
TB1, 3-4	HEAD L.	HEAD L.	HEAD L.	HEAD L.	HEAD L.	AUDSEL 2	INTRO	CHUCK	2
TB1, 5-6	HEAD R.	HEAD R.	HEAD R.	HEAD R.	HEAD R.	ALTSEL	PASQ	CHUCK	3
TB1, 7-8	HEAD UP	HEAD UP	HANDS	L ARM	HEAD UP		PASQ	CHUCK	4
TB1, 9-10	EYES R.	EYES R.	EYES R.	EYES R.	EYES R.		HELEN	JASPER	5
TB1, 11-12	EYELIDS	EYELIDS	EYELIDS	EYELIDS	EYELIDS	MAIN SEL1	HELEN	L. RED FLAG	6
TB1, 13-14	HAND	HAND	MUSTACHE	R. ARM	HAND	MAIN SEL2	CHUCK	L. YELLOW FLAG	7
TB1, 15-16	EYES L.	EYES L.	EYES L.	EYES L.	EYES L.	VID SEL1	CHUCK	L. BLUE FLAG	8
	BIRDS								
TB2, 1-2	MOUTH				DIMMER	VIDSEL 2	CHUCK	CTR. RED FLOOD	9
TB2, 3-4	ROCK				USA FLAG		JASPER	CTR. YLW FLOOD	10
TB2, 5-6					CONF. FLAG		JASPER	CTR. BL FLOOD	11
TB2, 7-8					STATE FLA		MUNCH	R. RED FLOOD	12
TB2, 9-10					CEC FLAG		MUNCH	R. YLW FLOOD	13
TB2, 11-12					ITAL. FLAG		BIRDS	R. BLUE FLOOD	14
TB2, 13-14							BIRDS		15
TB2, 15-16									16

LOUNGE

THE KINGS MAP

TB1#	HEADER 1 to 14	HEADER 2 to 14	LIGHT BAR COMMANDS 7 to 14
1&2	MOUTH	FOOT	SPOT CLEAR
3&4	EYES RIGHT	STRUM	SPOT RED
5&6	EYES LEFT	FRET	SPOT BLUE
7&8		LEFT LEG	SPOT RED
9&10	EARS	RIGHT LEG	SPOT AMBER
1&12	HEAD RIGHT	EYELIDS	
3&14	HEAD LEFT		
5&16	HEAD BACK		

TB2#		
1&2	STAGE RIGHT LITE	SIGN
3&4	RIGHT CENTER LITE	TIVOLI
5&6	CENTER LITE	
7&8	LEFT CENTER LITE	
9&10	STAGE LEFT LITE	
1&12	STOOLS	

TEAC SCHEMATIC DIAGRAM (AMPLIFIER) **X-7MKII**

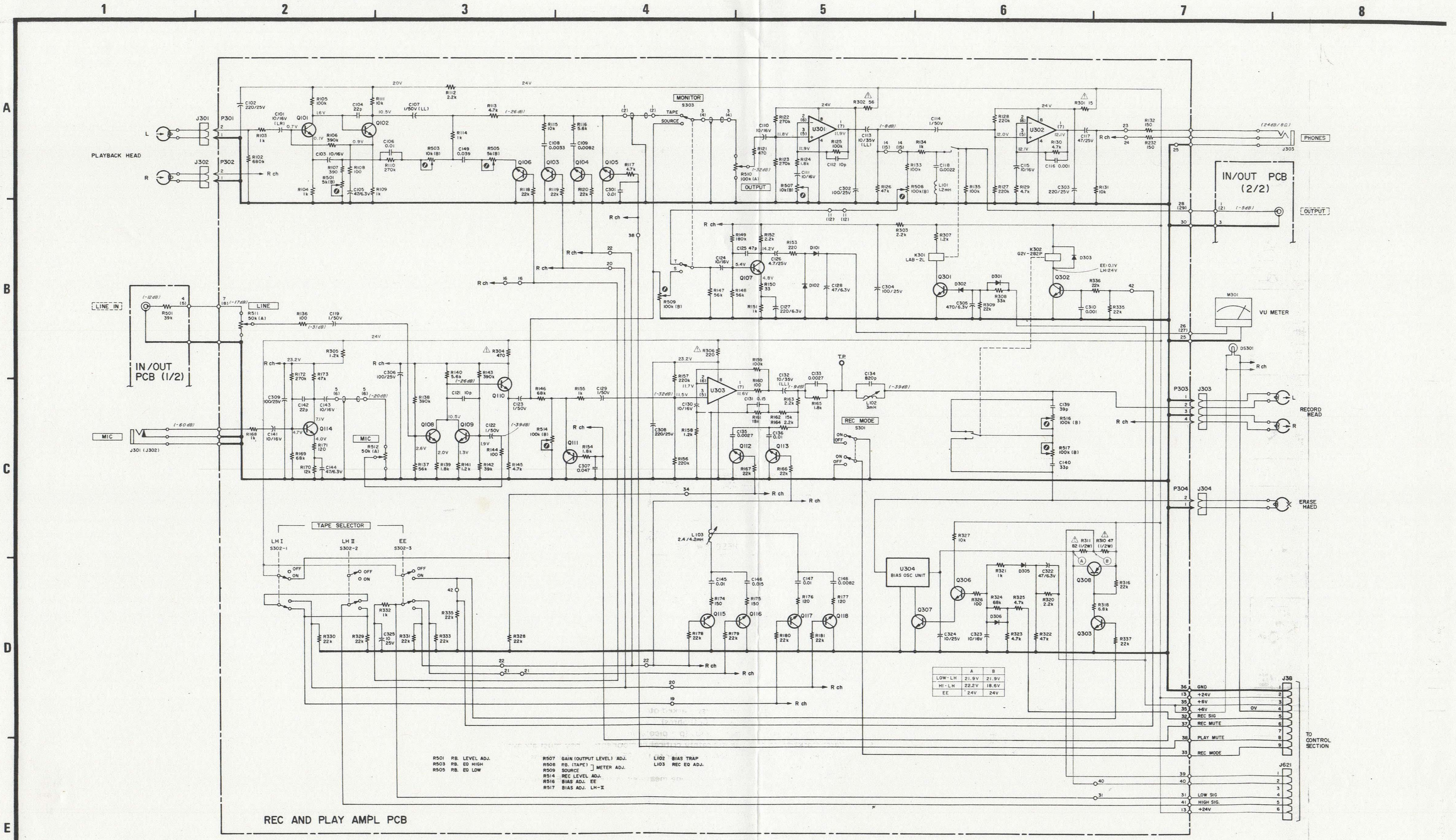
1
2
3
4
5
6
7
8
A
B
C
D
E
PLAYBACK HEAD
J301
J302
P301
P302
MONITOR
S303
TAPE
SOURCE
OUTPUT
U301
U302
PHONES
J303
IN/OUT PCB (2/2)
OUTPUT
LINE IN
LINE
IN/OUT PCB (1/2)
MIC
J301 (J302)
VU METER
M301
DS301
REC MODE
S301
P303
J303
RECORD HEAD
P304
J304
ERASE HAED
TAPE SELECTOR
LH I
S302-1
LH II
S302-2
EE
S302-3
U304
BIAS OSC UNIT
K301
LAB-2L
K302
G2V-282P
U303
T.P.
R ch
GND
+24V
+6V
REC SIG
REC MUTE
PLAY MUTE
REC MODE
LOW SIG.
HIGH SIG.
J38
J621
TO CONTROL SECTION
REC AND PLAY AMPL PCB

R501 P.B. LEVEL ADJ.
R503 P.B. EQ HIGH
R505 P.B. EQ LOW

R507 GAIN (OUTPUT LEVEL) ADJ.
R508 P.B. (TAPE)] METER ADJ.
R509 SOURCE]
R514 REC LEVEL ADJ.
R516 BIAS ADJ. EE
R517 BIAS ADJ. LH-II

L102 BIAS TRAP
L103 REC EQ ADJ.

	A	B
LOW-LH	21.9V	21.9V
HI-LH	22.2V	18.6V
EE	24V	24V

( ): R ch

U301	TA75558P
U302	TA75557P
U303	TA75558P

Q101 (Q201)	2SC1327T
Q102 ~ Q107 (Q202 ~ Q207)	2SC945L (K)
Q108 (Q208)	2SC1740LN (S)
Q109 (Q209)	2SC1740LN (S)
Q110 ~ Q113 (Q210 ~ Q213)	2SC945L (K)
Q114 (Q214)	2SC1327T
Q115 ~ Q118 (Q215 ~ Q218)	2SC945L (K)
Q301 ~ Q303	2SC945L (K)
Q306	2SC945L (K)
Q307	2SD655E
Q308	2SA1015(GR)

D101 (D201)	IN60
D102 (D202)	IN60
D301 ~ D303	IS2473
D305, D306	IS2473

TABLE OF CONTENTS

Packing List i

Operation 1

Pre Installation 4

Block diagram & Rack layout 5

Installation 7

Symetrix Calibration 10

Rosetta 11

Warranty Information 12

Schematics & Diagrams 13

CEC CYBERSTAR PACKING LIST

1. Installation and Operation manual
2. Power up & power down procedure
3. Cyberstar A/V control unit, Power supply, and cable X`ER
4. Symetrix SPL 571 level controller
5. Symetrix SX202 Dual Mic Preamp & cable (2 : 100 ft. XLR to XLR cable, and 3 ft. 1/4 inch stereo cable)
6. RM-2 Dual Mic Preamp rack
7. SC-2 Dual Mic Preamp rack side cover
8. JVC BR7000 Hi-Fi VCR
9. RK8600 VCR rack mount kit

*10. Modified character driver PCB (exchange)

11. Cyberstar EPROM (for CPU card)
12. Transport control cable
13. 1 : 3 ft. RCA-to-tinned cable
14. 2 : 3 ft. RCA-to-RCA cables
15. 2 : 3 ft. BNC-to-BNC video cables
16. Remote sensing microphone & 100 ft. XLR to XLR cable
17. Dux Tape
18. 2 : Cyberstar showtapes
19. Video head cleaner kit
20. Remote volume control and cable

* The exchange character driver board must be in a good working condition to avoid any repair charges.

CYBERSTAR FEATURES AND OPERATION

Cyberstar is a new, highly integrated control system adaptable to ShowBiz and Chuck E. Cheese animation systems. It provides the following features:

- Higher quality audio reproduction

- State-of-the-art automatic audio level control

- Low maintenance cost

Cyberstar is a system that runs all program material from a single VHS video cassette tape. All regular shows, birthdays, background music and Family Vision material are on the tape, as well as video countdowns to the next shows. The regular stage shows also have custom video that plays with the stage characters. This tape plays continually for nonstop entertainment. Because the tape plays continually, the method of playing birthday shows has changed. The birthday shows are "hidden" in the background music/countdown sequences between every skit and video. The background music/countdown sequences are ALWAYS eight minutes long. Three minutes after the end of a skit or video (or five minutes before the beginning of the next show or video) a birthday is available to play.

There are special visual indicators during the countdown to indicate that a birthday, if selected, will begin playing within three minutes. A birthday button is provided on the Manager's Control Panel for selecting the birthday. It can be selected anytime, but will not play until the tape reaches that birthday during normal play. This will never be more than 15 minutes away. If no birthday is selected, the system will play background music instead of a birthday. The visual indicators do not impact the starting of a birthday, but are provided to alert the crew that the beginning of the birthday is within three minutes.

Due to the availability of video with Cyberstar, color video monitors are recommended. Two monitors (one in showroom and one in gameroom) are a minimum but 4 or more is highly recommended. These monitors should have a video input and a video output.

BIRTHDAY HOLD

Birthday Hold: To put a birthday show on hold, press the birthday button then the cheer. Tape deck will stop before the birthday show, and the cheer light will flash. To start the birthday show after the hold, press the cheer button once and the birthday show will play.

DIAGNOSTICS AND VCR ADJUST MODE

Diagnostics mode will turn on all the lights on the stage, the remote console, and the main console.

VCR adjust mode will put the cyberstar system into the monitor mode. When the system is in the VCR adjust mode, cyberstar turns on the path for the video signal from the VCR to the monitors and the left audio channel from the VCR to the audio amplifiers. In VCR adjust mode, you can control the VCR and play any parts of the show tape or the stage diagnostics tape.

To put the system in diagnostics and VCR adjust mode follow the steps below.

1. Make sure that the show tape is out of the VCR.

2. Press the "RESET" button, while holding the "RESET" then press "DIAG" button, while holding the "DIAG" release the "RESET" then the "DIAG".

3. The "NEXT" and "SKIP" bulbs will begin to flash alternately.

4. By pressing the "NEXT" button, the computer will go to diagnostics mode (all stage and front panel lights will come on). By pressing the "SKIP" button, the system will go to VCR adjust mode. To return to the operating mode, just press the "RESET" button.

COMBO SYSTEM

The Eprom provided with this kit operates a combo system as well as the Chuck E. Cheese regular system, and must be installed into the main stages CPU board (U21). In a combo system the main stage will play normally until the show count down gets down to 5 minutes and at this time, if there is a Birthday selected, the main stage will play a birthday show, if not, it will send a command to the cabaret computer to start a cabaret show. This cycle will continue throughout the tape.

PRE INSTALLATION

PRE-INSTALLATION

The installation of the Chuck E. Cheese Cyberstar system is an overnight job. Installation should start in the evening (Sun - Wed) shortly after closing time. **Do Not attempt this installation on a Thurs - Sat night! If any problems are incurred in installation, you may be working under severe pressure in such a situation!**

The following items MUST be checked prior to installation of the Cyberstar system. If any of these items does not conform to specifications, it must be remedied before installation:

Main power supply - Verify that voltages on the main power supply are correct. Check the 5 volt DC levels between test point #1 (Ground) and test point #2 (+5 Volts) on the second character driver card (physically center of the rack). Be sure that the 5 volt supply is adjusted to a +/- .05 volt tolerance.

House light operation - Verify that the house light dimming circuits are operational.

You should run all the microphone and the remote volume control cables prior to your scheduled installation date.

After you have checked the preceding items, read the rest of this manual to become familiar with the system before you begin installation.

BLOCK DIAGRAM & RACK LAYOUT

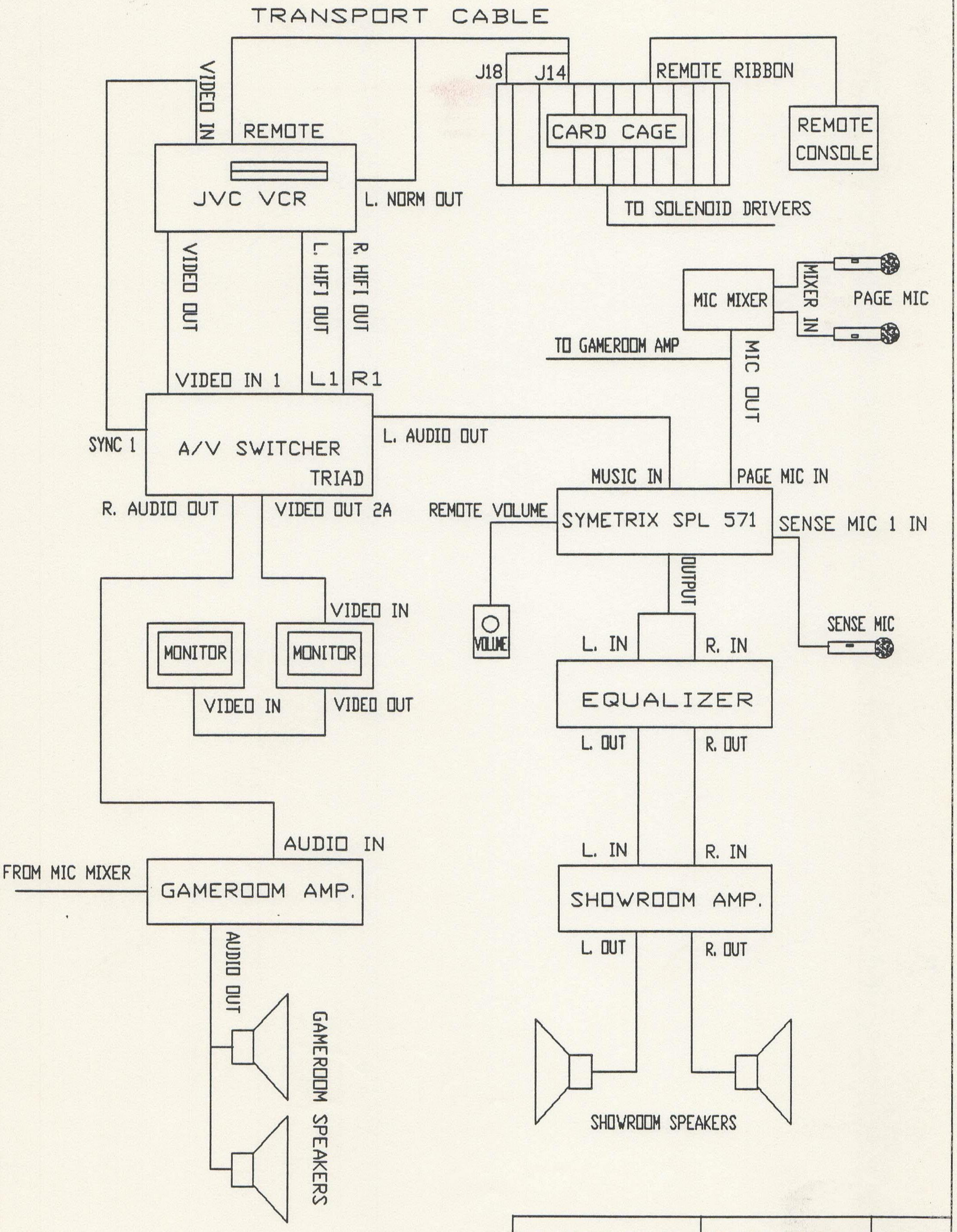
TRANSPORT CABLE
VIDEO IN
REMOTE
JVC VCR
L. NORM OUT
J18
J14
REMOTE RIBBON
CARD CAGE
REMOTE CONSOLE
TO SOLENOID DRIVERS
VIDEO OUT
L. HIFI OUT
R. HIFI OUT
MIC MIXER
MIXER IN
PAGE MIC
TO GAMEROOM AMP
MIC OUT
VIDEO IN 1
L1
R1
SYNC 1
A/V SWITCHER
TRIAD
L. AUDIO OUT
MUSIC IN
PAGE MIC IN
R. AUDIO OUT
VIDEO OUT 2A
REMOTE VOLUME
SYMETRIX SPL 571
SENSE MIC 1 IN
OUTPUT
VIDEO IN
MONITOR
MONITOR
VOLUME
L. IN
R. IN
SENSE MIC
VIDEO IN
VIDEO OUT
EQUALIZER
L. OUT
R. OUT
L. IN
R. IN
AUDIO IN
FROM MIC MIXER
GAMEROOM AMP.
SHOWROOM AMP.
L. OUT
R. OUT
AUDIO OUT
GAMEROOM SPEAKERS
SHOWROOM SPEAKERS

SUBJECT: CEC A/V FLOWCHART	DRAWING BY: F.KHOSHGAM	DATE: 10/23/90

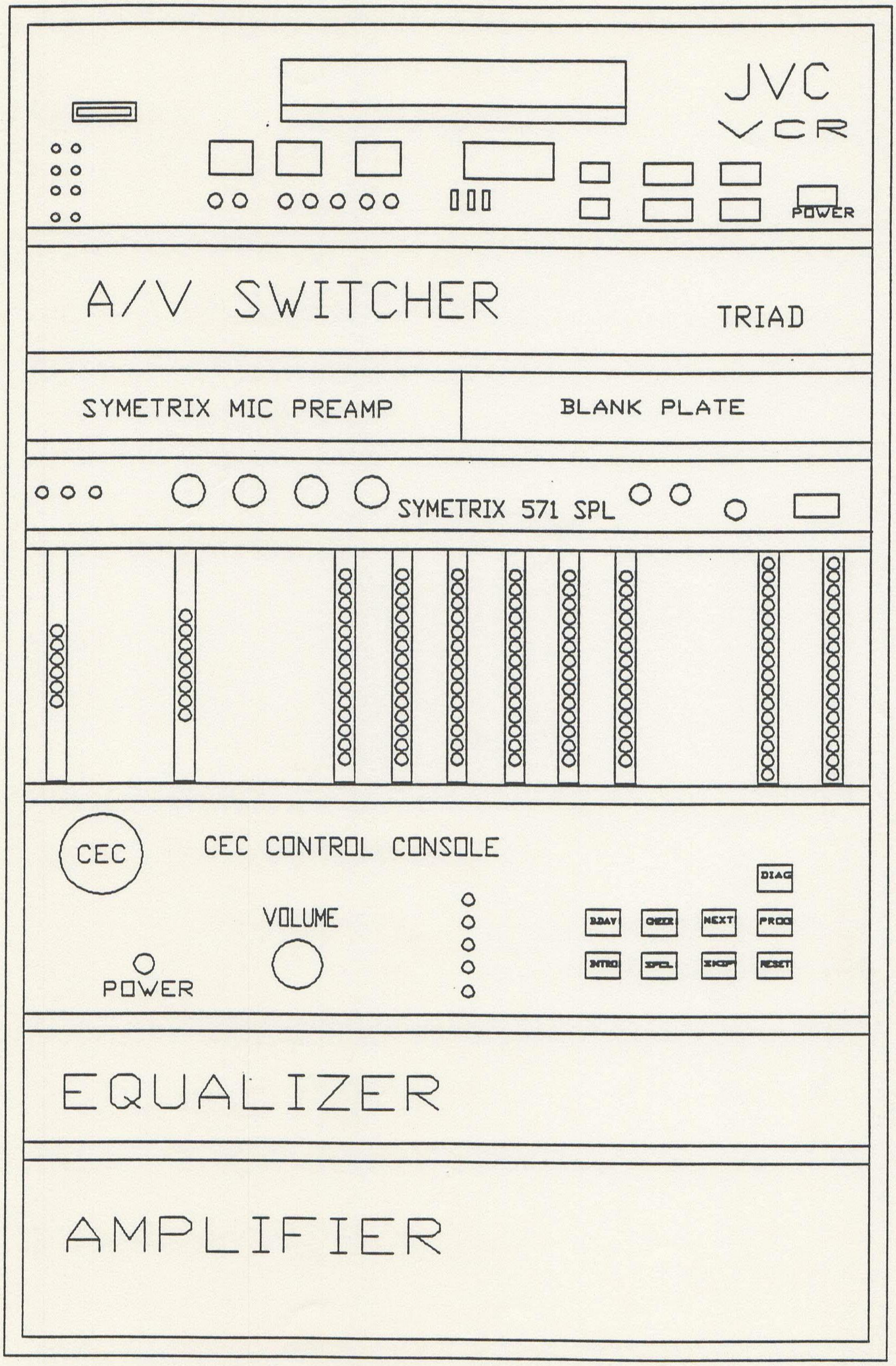
JVC
VCR
POWER
A/V SWITCHER
TRIAD
SYMETRIX MIC PREAMP
BLANK PLATE
SYMETRIX 571 SPL
CEC
CEC CONTROL CONSOLE
DIAG
VOLUME
B.DAY
NEXT
PROG
INTRO
SPCL
SKIP
RESET
POWER
EQUALIZER
AMPLIFIER

SUBJECT: CEC RACK LAYOUT	DRAWING BY: F.KHOSHGAM	DATE: 9/7/90

INSTALLATION

CEC CYBERSTAR INSTALLATION

Steps 11, 15, 16, and 22 should be done prior to the night of installation.

WARNING!

Disconnect power from the cyberamics rack before beginning the disassembly!

1. ✓ Remove the reel-to-reel tape deck from the audio rack. Be sure to disconnect all cables from the rear of the deck before removing it.

2. Remove all audio cables from the audio rack with the exception of those connected to the equalizer and main amplifier(s).

3. ✓ Install the Symetrix 571 SPL computer, Microphone Preamp and it's rack shelf, Cyberstar A/V control unit, and VCR rack mount kit as shown in rack layout diagram. Start at the bottom, mounting the Symetrix 571 SPL computer just above the card cage. The Symetrix SX202 (microphone preamp) and its shelf is mounted directly above the Symetrix 571 SPL computer, the Cyberstar A/V control unit is mounted directly above the Symetrix SX202 and, finally, the VCR rack mount kit is installed just above the Cyberstar A/V control unit (refer to rack layout).

4. ✓ Mount the JVC BR7000 VCR in the rack and install the front panel.

5. ✓ Using an RCA patch cable, connect the Audio Out (Hi-Fi) outputs from the VCR to the LI (left input) and RI (right input) jacks on the rear of the Cyberstar A/V control unit. Make sure to match the channels (left to left and right to right).

6. ✓ Using one of the BNC-to-BNC cables, connect the "VIDEO IN" input of the VCR to either of the outputs labeled "SYNC" on the Cyberstar A/V control unit. Use the other BNC-to-BNC cable to connect the VIDEO OUT output of the VCR to the "VIDEO 1 IN" jack on the Cyberstar A/V control unit.

7. ✓ Make sure that the FULL REPEAT switch on the back of the VCR is in the OFF position.

8. ○ The video line from the monitors (gameroom & showroom) plugs into the "V2 OUT" output of the Cyberstar A/V control unit.

Note: Showroom and gameroom monitors should be daisy-chained (video out of one feeds video in of the next in line) and the last monitor on the line should be terminated (low impedance - 75 ohms). In some cases, the pickup monitors previously used for the pizza pickup system may be tied to a video distribution amp. If this is the case, run a video cable from output "V2A" on the Cyberstar A/V control unit to the main input (or camera input) of the distribution amp.

9. ✓ Insert the 1/4 inch stereo jack that is connected to a three foot cable into the "BALANCED LINE OUTPUT 1 + 2" of the Symetrix SX202 (microphone preamp).

10. ✓ Connect the other side of this cable (tinned wires) to the "HOUSE PAGE IN" on the back of the Symetrix 571 SPL computer. Connect the TIP to " + " on the terminal strip (**WHITE** WIRE), connect the RING to " - " on the terminal strip (**RED** WIRE), connect the SLEEVE to "GND" on the terminal strip (**GND** WIRE).

11. ________ Use two of the microphone cables provided with the kit to connect your existing microphones to the back of the Symetrix SX202 (microphone preamp).

12. ✓ Using the RCA - tinned patch cable plug the RCA end into the jack marked "L" on the Cyberstar A/V control unit (left audio out). The shielded portion of the bare end of the wire should be connected to the terminal block on the Symetrix SPL 571 unit marked "MUSIC IN GND". The center conductor should be connected to the terminal marked "MUSIC IN +". Connect a jumper from the "MUSIC IN GND" to the music in "Low (-)".

Note: In a **combo system**, the "L" out from the A/V switcher should go to the Cabaret's J15 on the back of the Cabaret's card cage, then the **input** to the Cabaret's audio amplifier is tied to the music input of the Symetrix SPL 571.

13. ✓ Be sure that the FORMAT switch on the rear of the Symetrix SPL 571 unit is switched to MUSIC.

14. ✓ Connect the input of your main amplifier system (or equalizer) to the output of the Symetrix SPL 571 unit. Connect the shield to the terminal marked "OUTPUT GND" on the rear of the Symetrix SPL 571 unit. Connect the center conductor to the terminal marked "OUTPUT +".

15. ✓ Mount the volume control panel on or close to your hostess station. If you do not have a hostess station, the volume control panel can be mounted in Munch's room.

16. ✓ Run the 100 ft three conductor cable which is provided with your kit from the manager control panel to the Symetrix SPL 571 unit in your cyberstar rack.
(THE "U" CONNECTORS ATTACH TO THE SYMETRIX).

17. ✓ Remove the "U" shaped straps on TB2, #1 and #2, TB2 #3 and #4 of the Symetrix SPL 571.

18. ✓ Attach the wire coming from the wiper of the 50k, pot to the terminal TB2, #4, the high side of pot to TB2, #2, and low side of pot to TB2, #5 (Refer to misc. cable diagram).

Note: The audio path for the show is now complete. Audio travels from the outputs of the VCR (Hi-Fi Audio Out) to the inputs of the Cyberstar A/V control unit (LI and RI). From the output of the Cyberstar A/V control unit ("L" left audio out), the audio travels to the MUSIC IN input of the Symetrix. The OUTPUT of the Symetrix feeds the input of the main amplifier(s).

19. ________ Connecting the background music amp to the cyberstar system. Connect the "R" audio out of the Cyberstar A/V control unit to the input of your background music amp.

+ PWR DOWN

+ 571 OUTPUT → EQ

+ XER ROUT → BG AMP

+ PLUG IN MOD CHAR CARD

+ PLUG CABLE ALSO TO XER

+ REMOVE AUDIO CARD

+ ROM → CPU

PWR SUPPLIES

+ 571

− 202

− XER

+ VCR

+ MOLEX → J18

+ MOLEX → J14

20. ________Connect power to the Symetrix SPL 571, Symetrix SX202, Cyberstar A/V control unit, and the JVC BR7000 VCR. The Cyberstar A/V control unit and the Symetrix SX202 have a special power supply.

21. ____✓____The sensing microphone may now be mounted in the showroom ceiling. Pick a spot near the center of the showroom but as far as possible from any ceiling-mounted background music speakers or AC vents. You should mount the microphone to the ceiling tile. The microphone should be near to the ceiling and it should point downward. Make sure the switch on the outside of the microphone is switched to the ON position (you may want to wrap electrical tape around the outside of the microphone covering the switch to prevent it from being turned off).

22. ____✓____The 100 ft. extension cable for the sensing microphone should be connected to microphone. Run the cable through the ceiling to the control room.

23. ____✓____The other end of the 100 ft. extension cable (sensing mic.) should be plugged into the SENSE MIC 1 input of the Symetrix SPL 571 unit. The microphone will now provide ambient noise sensing to the unit.

Note: You may now verify that the audio system is working properly. By inserting a Cyberstar showtape into the VCR and pressing PLAY, audio should be heard through the show speakers in the dining area and through the background music system. Be sure that all components of the audio system are turned on.

24. ________With power off, remove the character driver board that is used for the pots and pans. This card should be sent back to ShowBiz Entertainment Engineering Department for exchange within 10 days. Plug in the new, modified character driver board for Cyberstar control and plug the cable from the Cyberstar control box into it.

25. ________Remove the audio card and store (this card is not needed with the Cyberstar system).

26. ________Connect the Cyberstar transport control left harness to the VCR. Plug the RCA plug into the output marked **"Normal Audio Out Left"**. Connect the 34-pin plug into the remote control connector on the back of the deck. The 12-pin and 2-pin molex plugs should be plugged into the molex receptacles on the rear of the card cage. 12 pin molex should plug in to J14 and 2 pin molex should plug in to J18

27. ________Remove the CPU board. Install the new EPROM in the CPU board (U21).

28. ________Installation complete!

Note: With the installation of Cyberstar, the pots and pans unit will not be utilized, therefore you may discard this unit at this time.

SYMETRIX CALIBRATION

SYMETRIX SPL 571 CALIBRATION PROCEDURE

1. Press the **MODE** switch once to enter Calibration mode.

2. Using the 571's LEVEL SET MIN control, adjust the sound system's minimum desired operating level when the LED bargraph indicator marked SET MIN flashes.

3. Using the 571's LEVEL SET MAX control, adjust the sound systems's maximum desired operating level when the LED bargraph indicator marked SET MAX flashes.

The 571 "listens" to the system for about 8 seconds at the minimum level (after it detects the last adjustment of the MIN control), and then for 8 seconds at the maximum level (after the last adjustment of the MAX control). Then the microprocessor returns the unit to OPERATE mode under the new calibration values.

When the calibration procedure is completed, the acoustic performance record of the room is placed in the unit's non-volatile memory along with the minimum and maximum level settings. The unit will operate under these calibration settings until the calibration procedure is run again.

The calibration procedure may be run as many times as necessary. If for any reason the procedure is interrupted before completion, the unit returns to OPERATE mode under the previously stored values. If the procedure is run to completion with no changes, the unit will calculate the same values as it did under the previous calibration procedure, and put those "new" values into non-volatile memory. Only when the LEVEL SET MAX or LEVEL SET MIN setting is changed does the unit put new operating values into memory.

Note: Before calibrating the Symetrix SPL 571, show must be in the operating mode (you should set your amplifiers to where you would normally set them at).

While calibrating, showroom must be empty of people (The only sound in the showroom should be the sound of the show coming from the speakers).

100 Show
80

ROSETTA

CHUCK E. CHEESE CYBERSTAR ROSETTA

	HEADER #1	HEADER #2	HEADER #3	HEADER #4	HEADER #5	HEADER #6	HEADER #7	HEADER #8	
TERMINAL #	CHUCK	JASPER	PASQUALLY	MUNCH	HELEN	A/V CONTROLLER	FRONT LIGHTS	BACK LIGHTS	LED
TB1, 1-2	MOUTH	MOUTH	MOUTH	MOUTH	MOUTH	AUDSEL 1	CLAP	HELEN	1
TB1, 3-4	HEAD L.	HEAD L.	HEAD L.	HEAD L.	HEAD L.	AUDSEL 2	INTRO	CHUCK	2
TB1, 5-6	HEAD R.	HEAD R.	HEAD R.	HEAD R.	HEAD R.	ALTSEL	PASQ	CHUCK	3
TB1, 7-8	HEAD UP	HEAD UP	HANDS	L ARM	HEAD UP		PASQ	CHUCK	4
TB1, 9-10	EYES R.	EYES R.	EYES R.	EYES R.	EYES R.		HELEN	JASPER	5
TB1, 11-12	EYELIDS	EYELIDS	EYELIDS	EYELIDS	EYELIDS	MAIN SEL1	HELEN	L. RED FLAG	6
TB1, 13-14	HAND	HAND	MUSTACHE	R. ARM	HAND	MAIN SEL2	CHUCK	L. YELLOW FLAG	7
TB1, 15-16	EYES L.	EYES L.	EYES L.	EYES L.	EYES L.	VID SEL1	CHUCK	L. BLUE FLAG	8
	BIRDS								
TB2, 1-2	MOUTH				DIMMER	VIDSEL 2	CHUCK	CTR. RED FLOOD	9
TB2, 3-4	ROCK				USA FLAG		JASPER	CTR. YLW FLOOD	10
TB2, 5-6					CONF. FLAG		JASPER	CTR. BL FLOOD	11
TB2, 7-8					STATE FLA		MUNCH	R. RED FLOOD	12
TB2, 9-10					CEC FLAG		MUNCH	R. YLW FLOOD	13
TB2, 11-12					ITAL. FLAG		BIRDS	R. BLUE FLOOD	14
TB2, 13-14							BIRDS		15
TB2, 15-16									16

WARRANTY INFORMATION

WARRANTY INFORMATION

The Cyberstar package consists of several different components which each one of these pieces carry their own warranty. The following information provides you with the warranty conditions and name of the vendor/manufacturer to contact.

JVC BR 7000 VCR

The JVC BR7000 VCR has a one year warranty on parts and 90 days on labor. This warranty is honored through.

Mission Electronics
9301 W 74th
Shawnee Mission, KS 66204
(913) 362-1485

SYMETRIX SPL 571, AND SYMETRIX SX 202

Symetrix Limited Warranty

A. Warranty Registration must be completed and mailed to Symetrix Inc. (Symetrix) within 30 days of the date of purchase.

B. Symetrix warrants the materials, workmanship and proper operation of this Symetrix product for a period of one year from the original date of purchase. If any defects are found in the materials or workmanship, or if the product fails to function properly within the specified warranty periods, Symetrix will repair or replace the product, at its option.

C. To obtain factory service:

1. Call Symetrix for a Return Authorization Number. R/A numbers necessary for proper tracking of your product. Call (206) 282-2555 or Telex 703282 SYMETRIX UD 8 a.m. to 4 p.m. weekdays (Pacific time).

2. The product must be returned in its original shipping carton, freight prepaid to:

Symetrix, Inc.
4211 24th Avenue West
Seattle, WA 98199

A/V SWITCHER, AND A/V SWITCHER POWER SUPPLY

The A/V Switcher and its power supply both have a one year warranty on parts and 90 days on labor. This warranty is honored through.

Creative Presentations, Inc.
24907 Anza Drive
Valencia, CA 91355
(805) 295-1983

SCHEMATICS & DIAGRAMS

SUBJECT: CEC CARDCAGE LAYOUT

DRAWN BY: FARSHID KHOSHGAM

DATE: 10/17/90

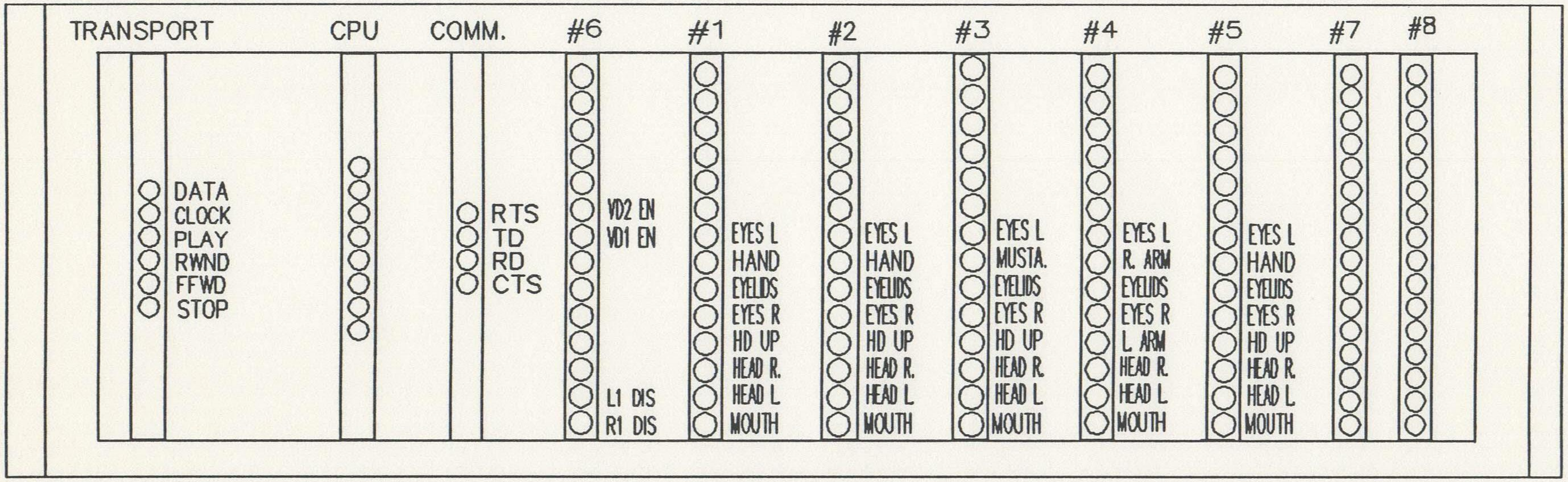
TRANSPORT
DATA
CLOCK
PLAY
RWND
FFWD
STOP
CPU
COMM.
RTS
TD
RD
CTS
#6
VD2 EN
VD1 EN
L1 DIS
R1 DIS
#1
EYES L
HAND
EYELIDS
EYES R
HD UP
HEAD R.
HEAD L
MOUTH
#2
EYES L
HAND
EYELIDS
EYES R
HD UP
HEAD R.
HEAD L
MOUTH
#3
EYES L
MUSTA.
EYELIDS
EYES R
HD UP
HEAD R.
HEAD L.
MOUTH
#4
EYES L
R. ARM
EYELIDS
EYES R
L. ARM
HEAD R.
HEAD L.
MOUTH
#5
EYES L
HAND
EYELIDS
EYES R
HD UP
HEAD R.
HEAD L.
MOUTH
#7
#8

HEADER #1: CHUCK E. CHEESE
HEADER #2: JASPER
HEADER #3: PAQUALLY
HEADER #4: MUNCH
HEADER #5: HELEN
HEADER #6: A/V SWITCHER CARD
HEADER #7: FRONT LIGHTBAR
HEADER #8: BACK LIGHTBAR

NOTE: COMM. CARD IS USED IN THE COMBO SYSTEMS ONLY

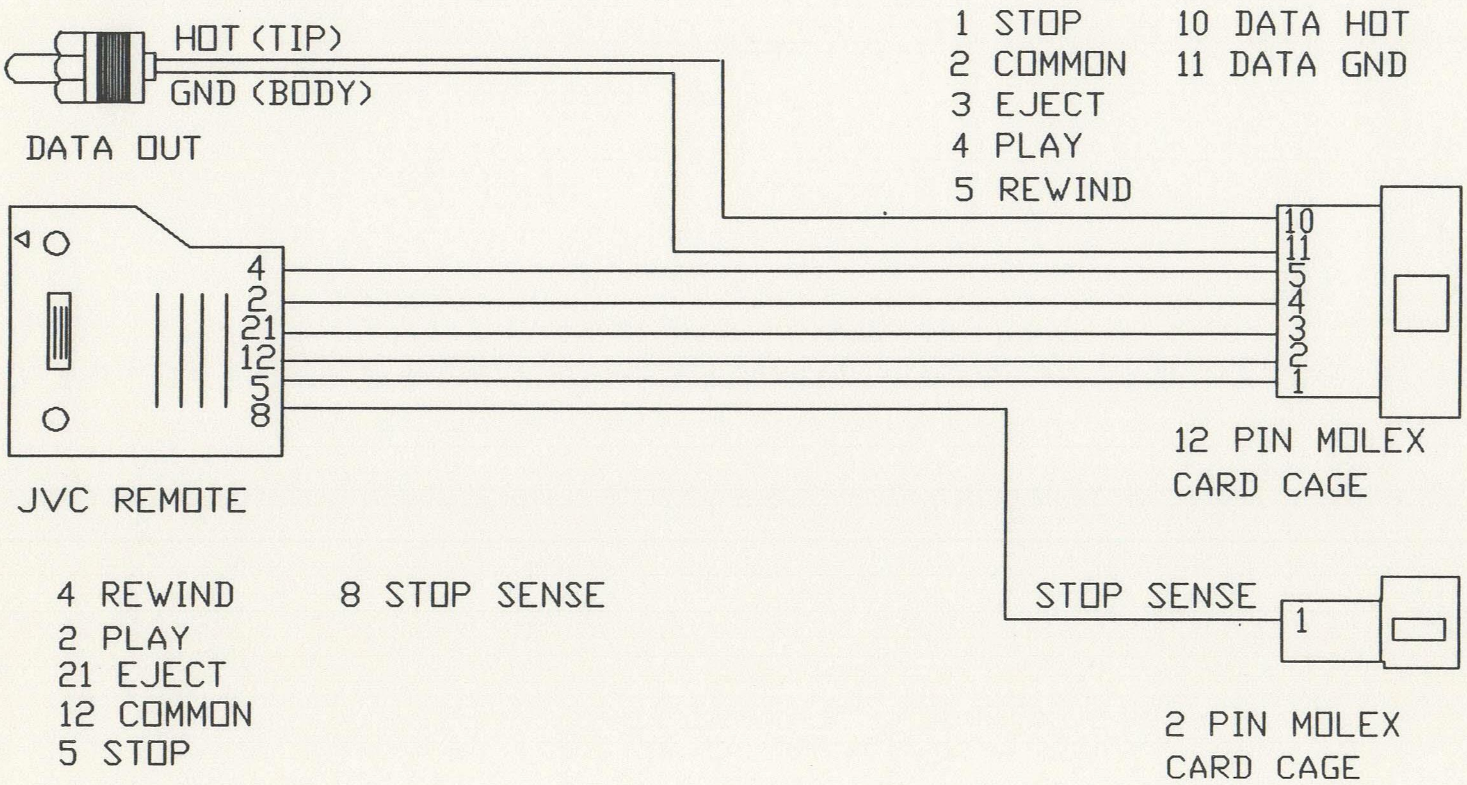
HOT (TIP)
GND (BODY)
DATA OUT
1 STOP
2 COMMON
3 EJECT
4 PLAY
5 REWIND
10 DATA HOT
11 DATA GND
4
2
21
12
5
8
10
11
5
4
3
2
1
12 PIN MOLEX
CARD CAGE
JVC REMOTE
4 REWIND
2 PLAY
21 EJECT
12 COMMON
5 STOP
8 STOP SENSE
STOP SENSE
1
2 PIN MOLEX
CARD CAGE

TRANSPORT CABLE
DRAWING BY: F.KHOSHGAM
DATE: 9/7/90

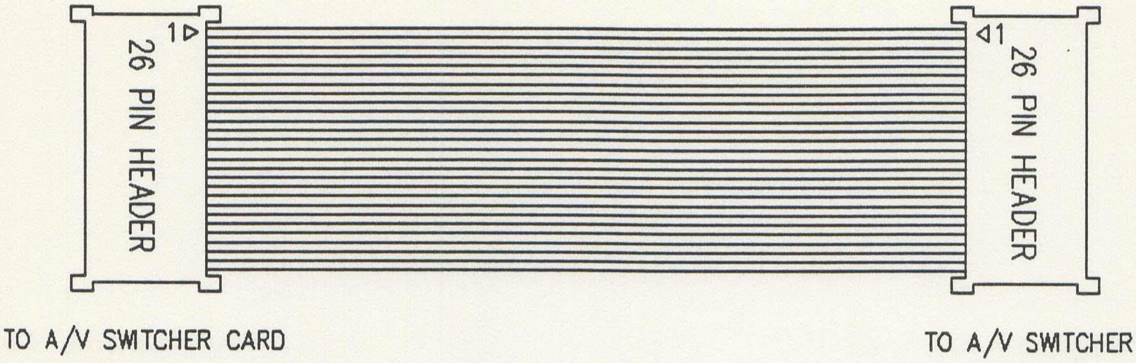
1
26 PIN HEADER
1
26 PIN HEADER
TO A/V SWITCHER CARD
TO A/V SWITCHER

A/V SWITCHER CABLE

12 VIDEO SELECT 2
13 VIDEO SELECT 1
19 AUDIO SELECT 2
20 AUDIO SELECT 1
25 & 26 GROUND
MN1, MN2, & ALT GROUND

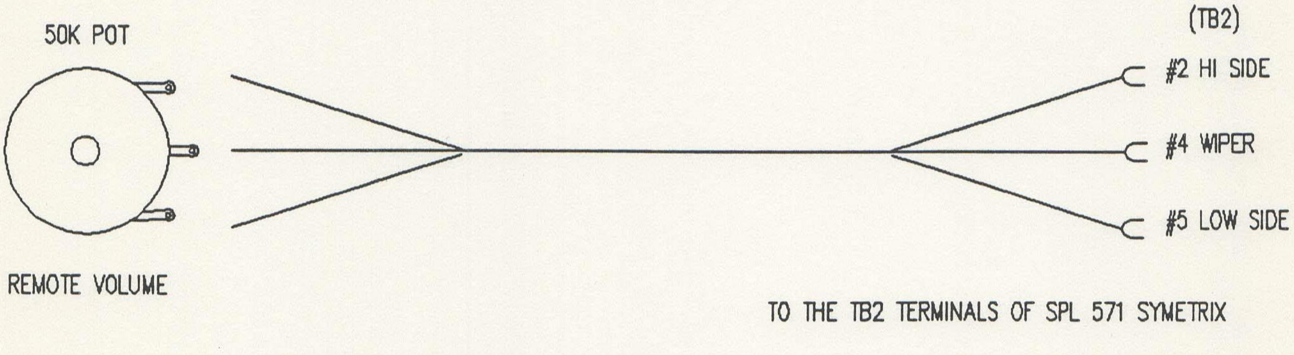
50K POT
REMOTE VOLUME
(TB2)
#2 HI SIDE
#4 WIPER
#5 LOW SIDE
TO THE TB2 TERMINALS OF SPL 571 SYMETRIX

REMOTE CONTROL OF GAIN FUNCTION

SUBJECT: MISC. CABLES	DRAWING BY: F.KHOSHGAM	DATE: 10/17/90

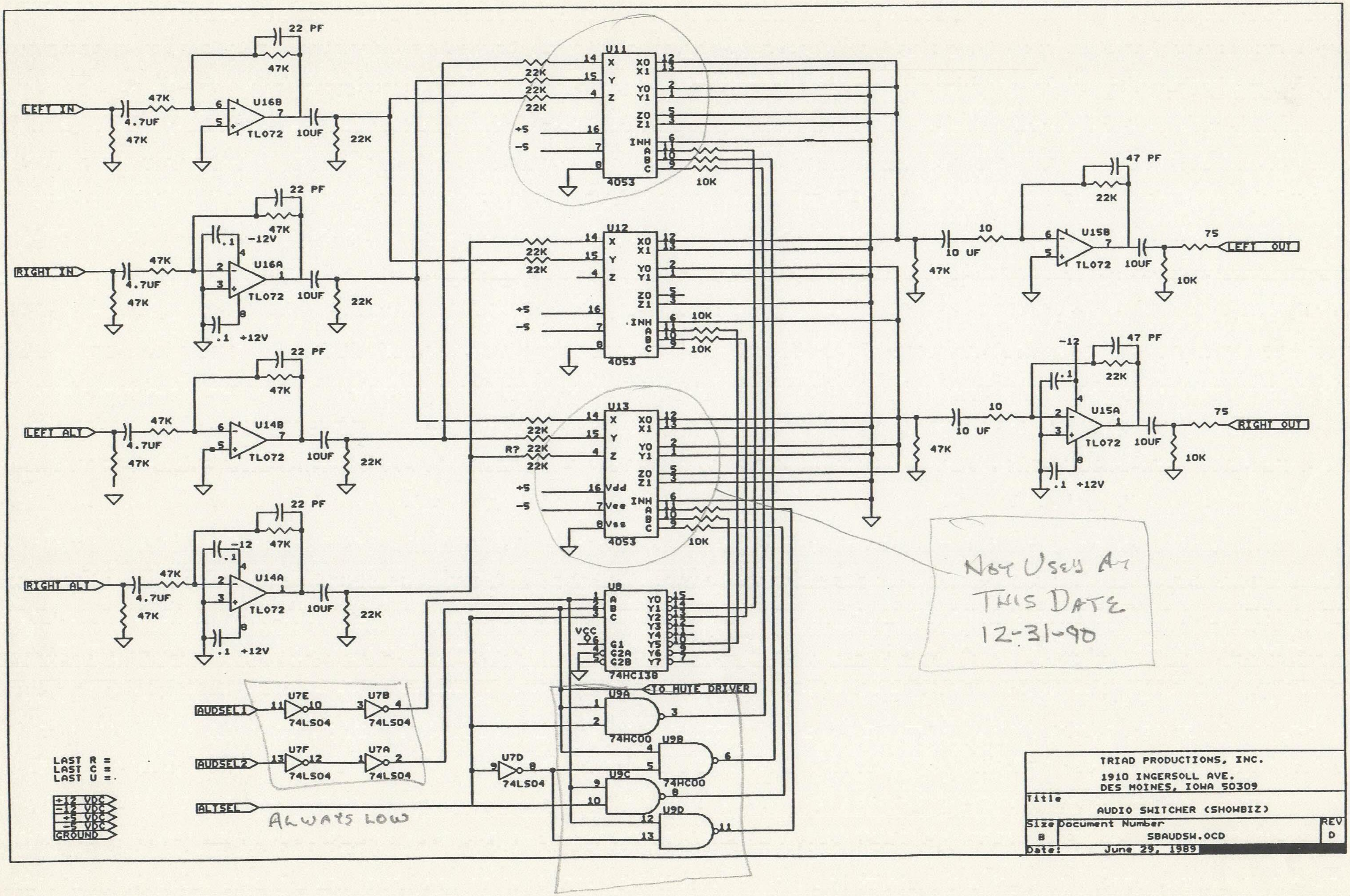
LEFT IN
RIGHT IN
LEFT ALT
RIGHT ALT
LEFT OUT
RIGHT OUT
AUDSEL1
AUDSEL2
ALTSEL
TO MUTE DRIVER
U16B
U16A
U14B
U14A
U15B
U15A
TL072
U11
U12
U13
4053
U8
74HC138
U9A
U9B
U9C
U9D
74HC00
U7E
U7B
U7F
U7A
U7D
74LS04
X
Y
Z
X0
X1
Y0
Y1
Z0
Z1
INH
A
B
C
Vdd
Vee
Vss
Y0
Y1
Y2
Y3
Y4
Y5
Y6
Y7
G1
G2A
G2B
VCC
4.7UF
47K
22K
10K
10UF
10 UF
22 PF
47 PF
.1
10
75
R?
+5
-5
-12V
+12V
-12
LAST R =
LAST C =
LAST U =
+12 VDC
-12 VDC
+5 VDC
-5 VDC
GROUND

Not Used At This Date 12-31-90

Always Low

TRIAD PRODUCTIONS, INC.
1910 INGERSOLL AVE.
DES MOINES, IOWA 50309

Title
AUDIO SWITCHER (SHOWBIZ)

Size	Document Number	REV
B	SBAUDSW.OCD	D

Date: June 29, 1989 [redacted]

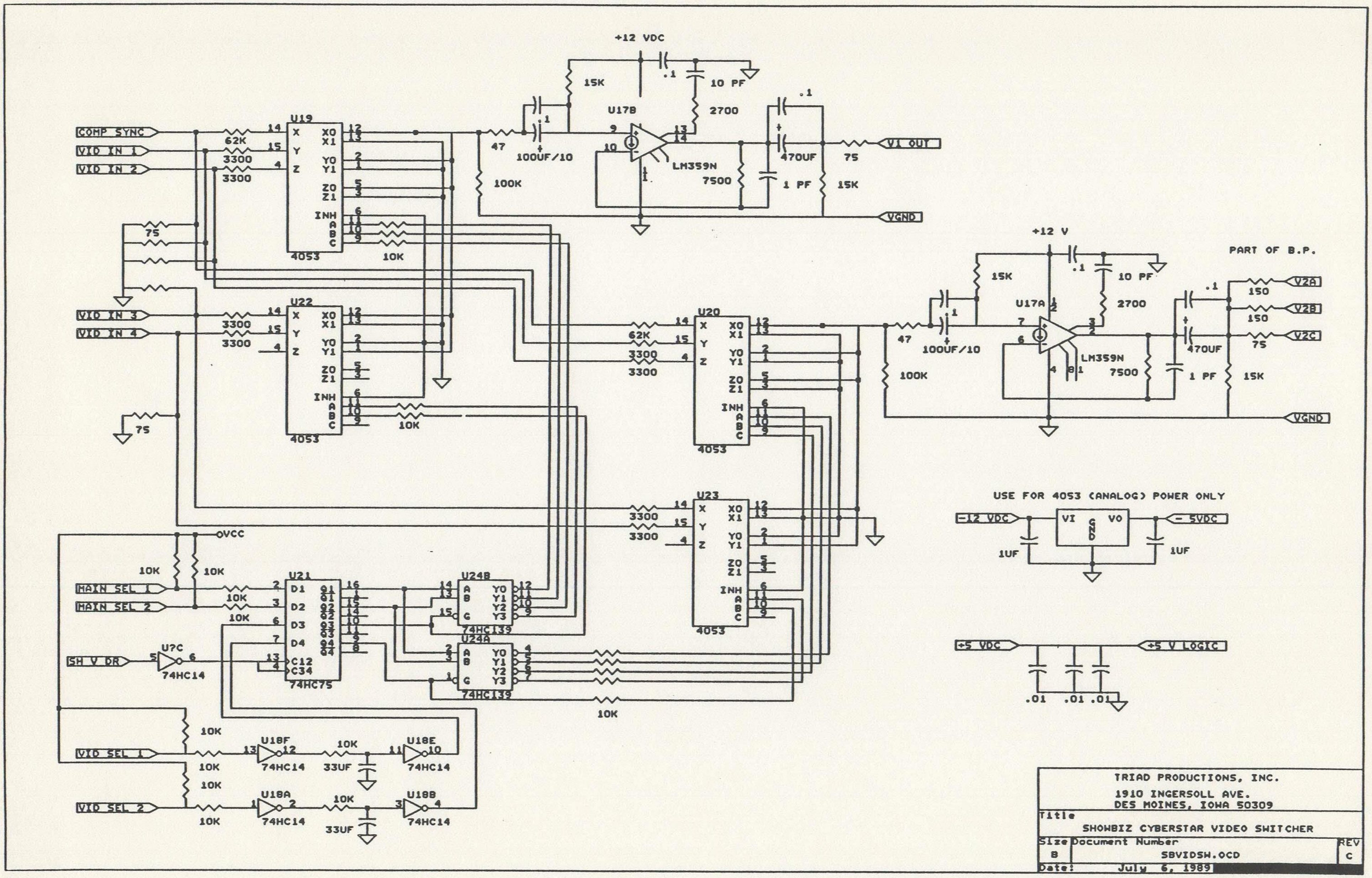
+12 VDC
15K
.1
10 PF
U17B
2700
.1
COMP SYNC
VID IN 1
VID IN 2
62K
3300
3300
U19
4053
47
100UF/10
100K
LM359N
7500
470UF
1 PF
75
15K
V1 OUT
VGND
75
10K
VID IN 3
VID IN 4
U22
4053
75
10K
U20
4053
U23
4053
+12 V
PART OF B.P.
15K
U17A
LM359N
100UF/10
47
100K
7500
470UF
1 PF
150
150
75
15K
V2A
V2B
V2C
VGND
USE FOR 4053 (ANALOG) POWER ONLY
-12 VDC
VI
GND
VO
- 5VDC
1UF
1UF
+5 VDC
+5 V LOGIC
.01
.01
.01
VCC
10K
10K
MAIN SEL 1
MAIN SEL 2
U21
74HC75
U24B
74HC139
U24A
74HC139
SH V DR
U7C
74HC14
10K
VID SEL 1
VID SEL 2
U18F
74HC14
U18E
74HC14
U18A
74HC14
U18B
74HC14
33UF
33UF
10K

TRIAD PRODUCTIONS, INC.
1910 INGERSOLL AVE.
DES MOINES, IOWA 50309

Title
SHOWBIZ CYBERSTAR VIDEO SWITCHER

Size	Document Number	REV
B	SBVIDSW.OCD	C

Date: July 6, 1989

Block Diagram

Note that mic level audio signals are routed through 3-pin XLR connectors, and that all other terminations are made through the rear panel barrier strips TB1 and TB2.

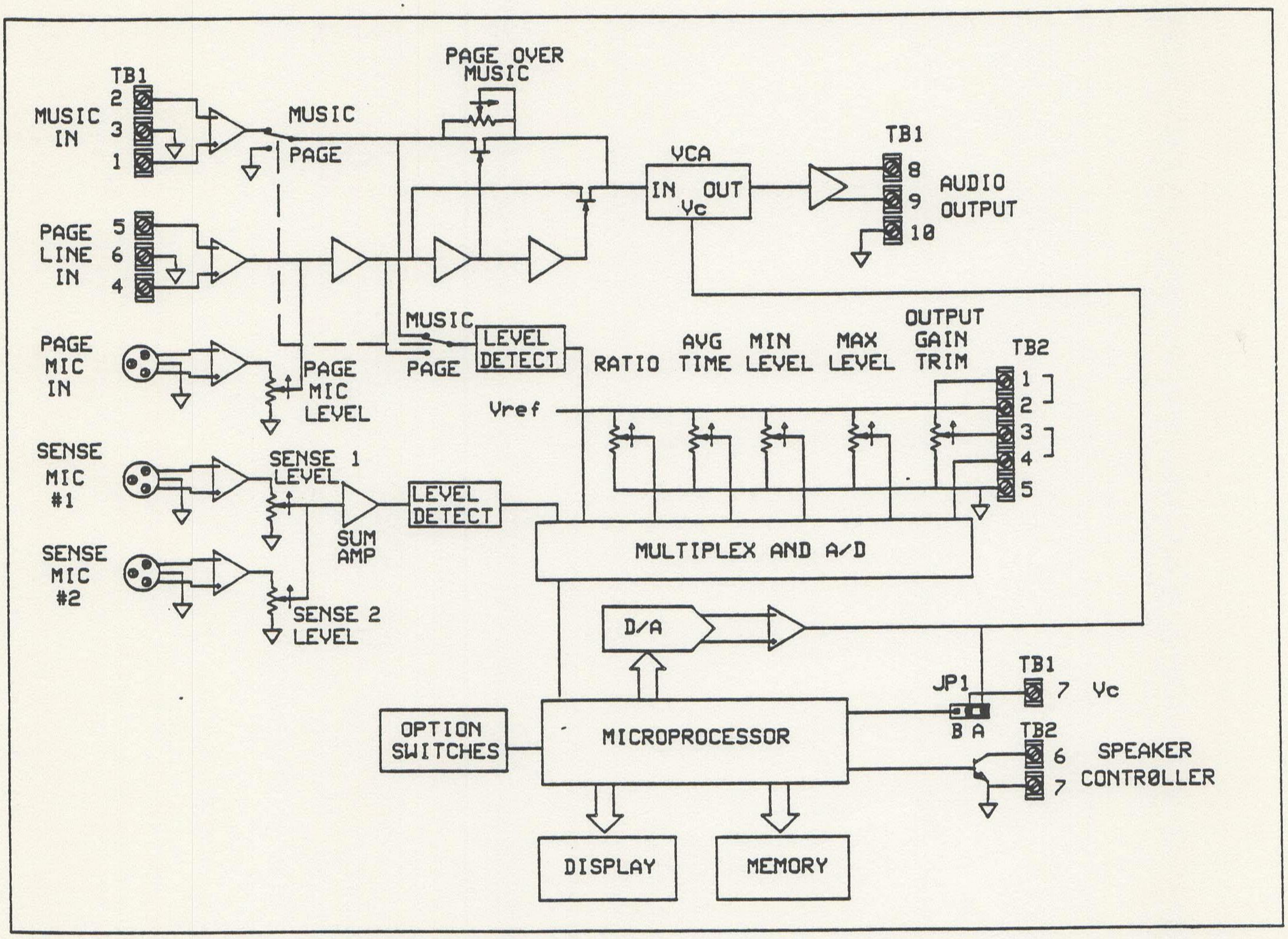
TB1
2
3
1
MUSIC IN
MUSIC
PAGE
PAGE OVER MUSIC
VCA
IN
OUT
Vc
TB1
8
9
10
AUDIO OUTPUT
PAGE LINE IN
5
6
4
PAGE MIC IN
PAGE MIC LEVEL
MUSIC
PAGE
LEVEL DETECT
RATIO
AVG TIME
MIN LEVEL
MAX LEVEL
OUTPUT GAIN TRIM
TB2
1
2
3
4
5
Vref
SENSE MIC #1
SENSE 1 LEVEL
SUM AMP
LEVEL DETECT
MULTIPLEX AND A/D
SENSE MIC #2
SENSE 2 LEVEL
D/A
JP1
B A
TB1
7
Vc
TB2
6
7
SPEAKER CONTROLLER
OPTION SWITCHES
MICROPROCESSOR
DISPLAY
MEMORY

571 Block Diagram

LTR	REVISION	DATE
D	INCORP ECO 73	5-5-87
E	INCORP ECO 74	5-6-87

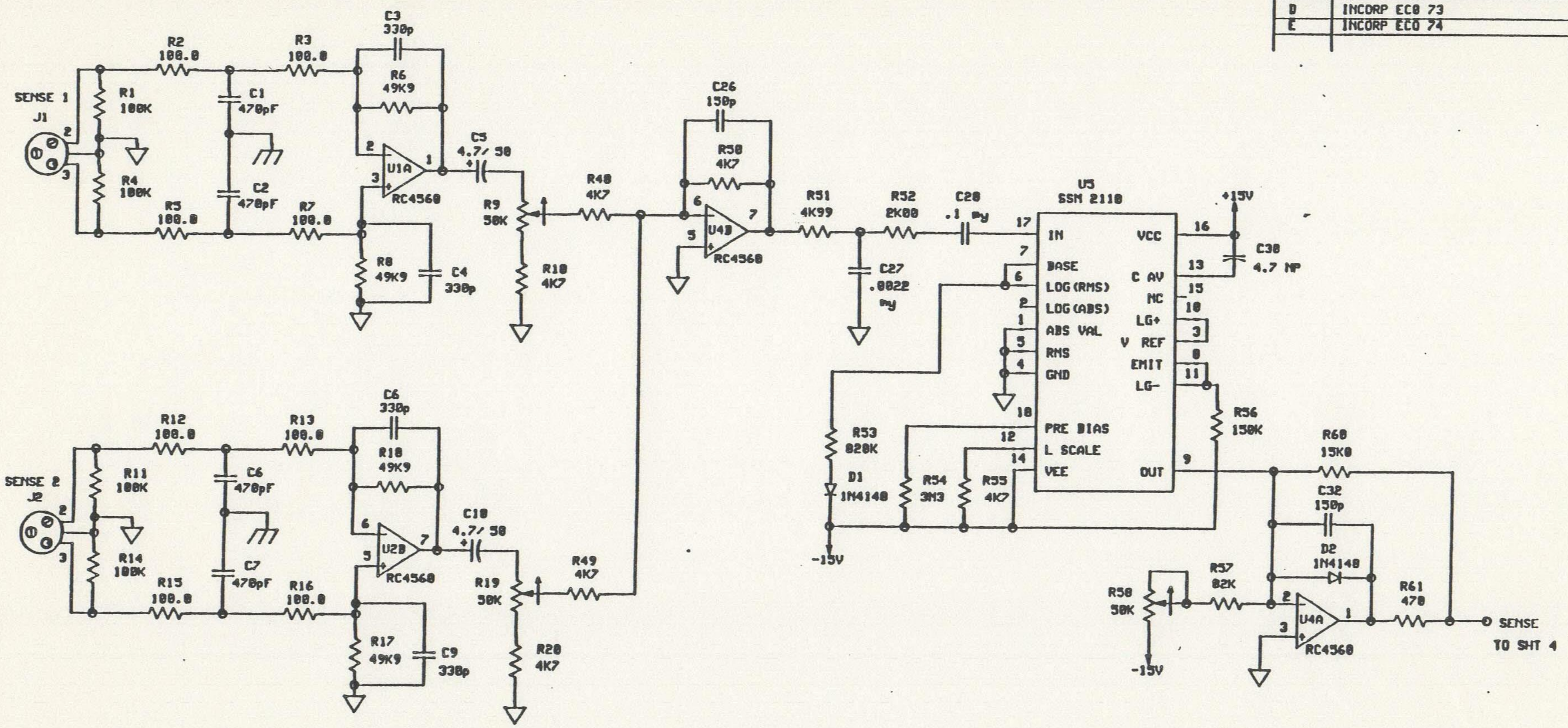

SENSE 1
J1
R1 100K
R4 100K
R2 100.0
R3 100.0
R5 100.0
R7 100.0
C1 470pF
C2 470pF
C3 330p
R6 49K9
U1A
RC4560
R8 49K9
C4 330p
C5 4.7/ 50
R9 50K
R10 4K7
R48 4K7
C26 150p
R50 4K7
U4B
RC4560
R51 4K99
R52 2K00
C28 .1 mу
C27 .0022 mу
U5
SSM 2110
IN
BASE
LOG(RMS)
LOG(ABS)
ABS VAL
RMS
GND
PRE BIAS
L SCALE
VEE
VCC
C AV
NC
LG+
V REF
EMIT
LG-
OUT
+15V
C30 4.7 NP
R53 820K
D1 1N4148
R54 3M3
R55 4K7
R56 150K
-15V
R60 15K0
C32 150p
D2 1N4148
R58 50K
R57 82K
U4A
RC4560
R61 470
SENSE TO SHT 4
SENSE 2
J2
R11 100K
R14 100K
R12 100.0
R13 100.0
R15 100.0
R16 100.0
C6 470pF
C7 470pF
C6 330p
R18 49K9
U2B
RC4560
R17 49K9
C9 330p
C10 4.7/ 50
R19 50K
R20 4K7
R49 4K7

SYMETRIX INC.

TITLE
SCHEMATIC 571
SPL COMPUTER

DWG NO 191740 REV E

DATE 4-17-87 SHT 1 OF 5

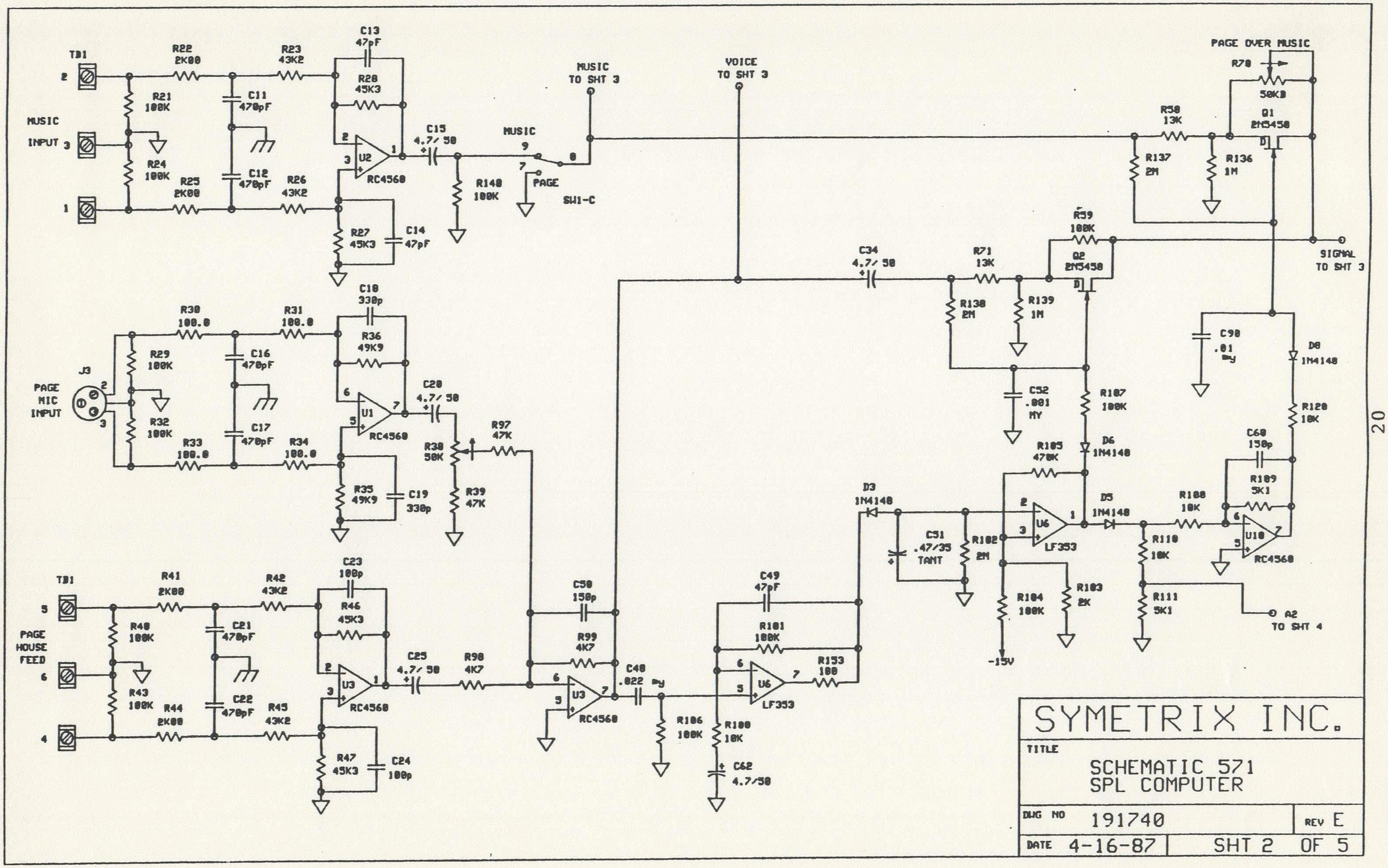
TB1
2
MUSIC
INPUT 3
1
R22
2K00
R21
100K
R24
100K
R25
2K00
C11
470pF
C12
470pF
R23
43K2
R26
43K2
C13
47pF
R28
45K3
U2
RC4560
R27
45K3
C14
47pF
C15
4.7/ 50
R140
100K
MUSIC
9
8
7
PAGE
SW1-C
MUSIC
TO SHT 3
VOICE
TO SHT 3
PAGE OVER MUSIC
R70
50KB
R58
13K
Q1
2N5458
R137
2M
R136
1M
R59
100K
SIGNAL
TO SHT 3
C34
4.7/ 50
R71
13K
Q2
2N5458
R138
2M
R139
1M
C52
.001
MY
C90
.01
my
D8
1N4148
R107
100K
R120
10K
D6
1N4148
R105
470K
C60
150p
R109
5K1
J3
PAGE
MIC
INPUT
R30
100.0
R31
100.0
R29
100K
R32
100K
R33
100.0
R34
100.0
C16
470pF
C17
470pF
C18
330p
R36
49K9
U1
RC4560
R35
49K9
C19
330p
C20
4.7/ 50
R38
50K
R97
47K
R39
47K
D3
1N4148
C51
.47/35
TANT
R102
2M
U6
LF353
D5
1N4148
R108
10K
U10
RC4560
R110
10K
R111
5K1
R104
100K
R103
2K
-15V
A2
TO SHT 4
TB1
5
PAGE
HOUSE
FEED
6
4
R41
2K00
R40
100K
R43
100K
R44
2K00
C21
470pF
C22
470pF
R42
43K2
R45
43K2
C23
100p
R46
45K3
U3
RC4560
R47
45K3
C24
100p
C25
4.7/ 50
R98
4K7
C50
150p
R99
4K7
U3
RC4560
C40
.022 my
R106
100K
C49
47pF
R101
100K
U6
LF353
R153
100
R100
10K
C62
4.7/50

SYMETRIX INC.

TITLE

SCHEMATIC 571
SPL COMPUTER

DWG NO 191740
REV E

DATE 4-16-87
SHT 2 OF 5

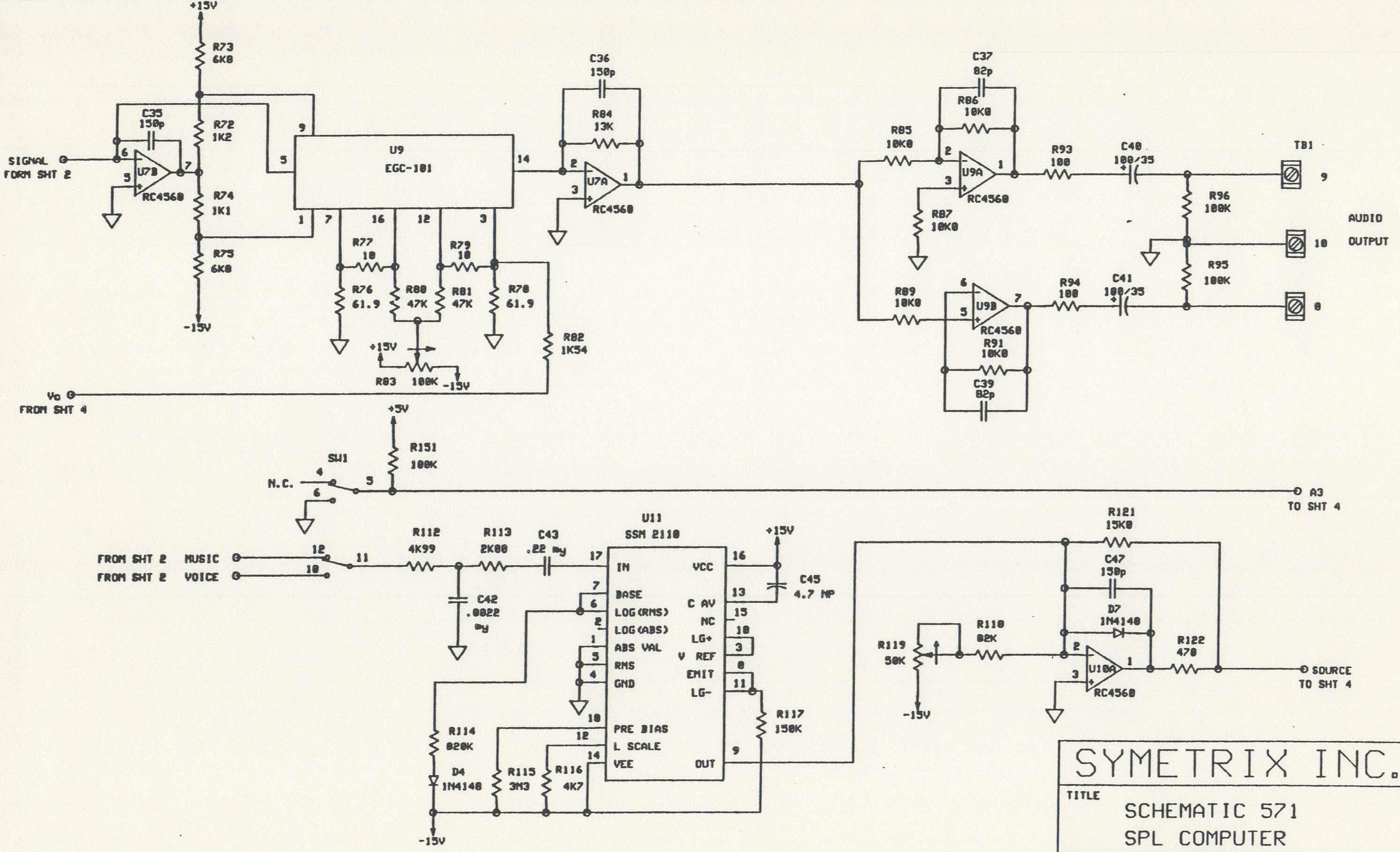
+15V
R73
6K8
C35
150p
R72
1K2
SIGNAL
FORM SHT 2
U7B
RC4560
R74
1K1
R75
6K8
-15V
U9
EGC-101
C36
150p
R84
13K
U7A
RC4560
R77
10
R79
10
R76
61.9
R80
47K
R81
47K
R78
61.9
R82
1K54
+15V
R83
100K
-15V
Vo
FROM SHT 4
C37
82p
R86
10K0
R85
10K0
U9A
RC4560
R87
10K0
R93
100
C40
100/35
TB1
R96
100K
AUDIO
OUTPUT
R95
100K
R89
10K0
U9B
RC4560
R91
10K0
C39
82p
R94
100
C41
100/35
+5V
R151
100K
SW1
N.C.
A3
TO SHT 4
U11
SSM 2110
FROM SHT 2
MUSIC
FROM SHT 2
VOICE
R112
4K99
R113
2K00
C43
.22 My
C42
.0022
My
IN
BASE
LOG (RMS)
LOG (ABS)
ABS VAL
RMS
GND
PRE BIAS
L SCALE
VEE
VCC
C AV
NC
LG+
V REF
EMIT
LG-
OUT
+15V
C45
4.7 MF
R117
150K
R114
820K
D4
1N4148
R115
3M3
R116
4K7
-15V
R121
15K0
C47
150p
D7
1N4148
R119
50K
R118
82K
U10A
RC4560
R122
470
SOURCE
TO SHT 4

SYMETRIX INC.

TITLE

SCHEMATIC 571

SPL COMPUTER

DWG NO 191740

REV E

DATE 4-16-87

SHT 3 OF 5

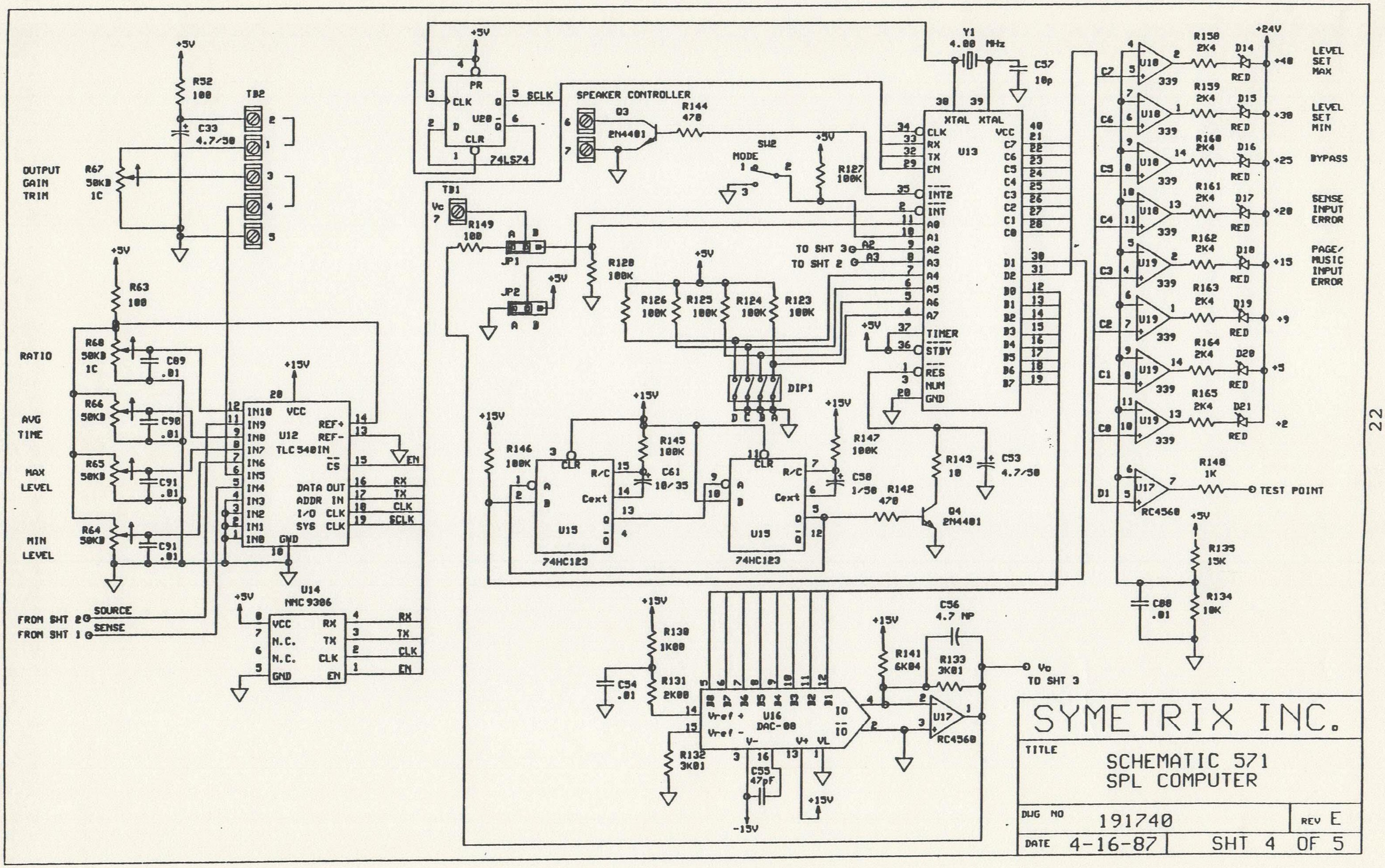

OUTPUT GAIN TRIM
R67 50KB 1C
R52 100
C33 4.7/50
TB2
+5V
R63 100
RATIO
R68 50KB 1C
C89 .01
AVG TIME
R66 50KB
C90 .01
MAX LEVEL
R65 50KB
C91 .01
MIN LEVEL
R64 50KB
C91 .01
FROM SHT 2 SOURCE
FROM SHT 1 SENSE
U12 TLC540
+15V
REF+
REF-
CS
EN
DATA OUT
ADDR IN
I/O CLK
SYS CLK
RX
TX
CLK
SCLK
U14 NMC9306
VCC
N.C.
GND
U20 74LS74
PR
CLR
SCLK
SPEAKER CONTROLLER
Q3 2N4401
R144 470
SW2 MODE
R127 100K
TB1
Vc
R149 100
JP1
JP2
R128 100K
TO SHT 3 A2
TO SHT 2 A3
R126 100K
R125 100K
R124 100K
R123 100K
DIP1
Y1 4.00 MHz
C57 10p
U13
XTAL
INT2
INT
TIMER
STBY
RES
NUM
U15 74HC123
R146 100K
R145 100K
C61 10/35
R147 100K
C58 1/50
R142 470
R143 10
C53 4.7/50
Q4 2N4401
+24V
R158 2K4
D14 RED
R159 2K4
D15 RED
R160 2K4
D16 RED
R161 2K4
D17 RED
R162 2K4
D18 RED
R163 2K4
D19 RED
R164 2K4
D20 RED
R165 2K4
D21 RED
U18 339
U19 339
+40
+30
+25
+20
+15
+9
+5
+2
LEVEL SET MAX
LEVEL SET MIN
BYPASS
SENSE INPUT ERROR
PAGE/ MUSIC INPUT ERROR
U17 RC4560
R140 1K
TEST POINT
R135 15K
R134 10K
C80 .01
R130 1K00
C54 .01
R131 2K00
R132 3K01
U16 DAC-08
Vref +
Vref -
V-
V+
VL
IO
C55 47pF
-15V
+15V
R141 6K04
R133 3K01
C56 4.7 NP
Vo TO SHT 3

SYMETRIX INC.

TITLE

SCHEMATIC 571
SPL COMPUTER

DWG NO 191740 REV E

DATE 4-16-87 SHT 4 OF 5

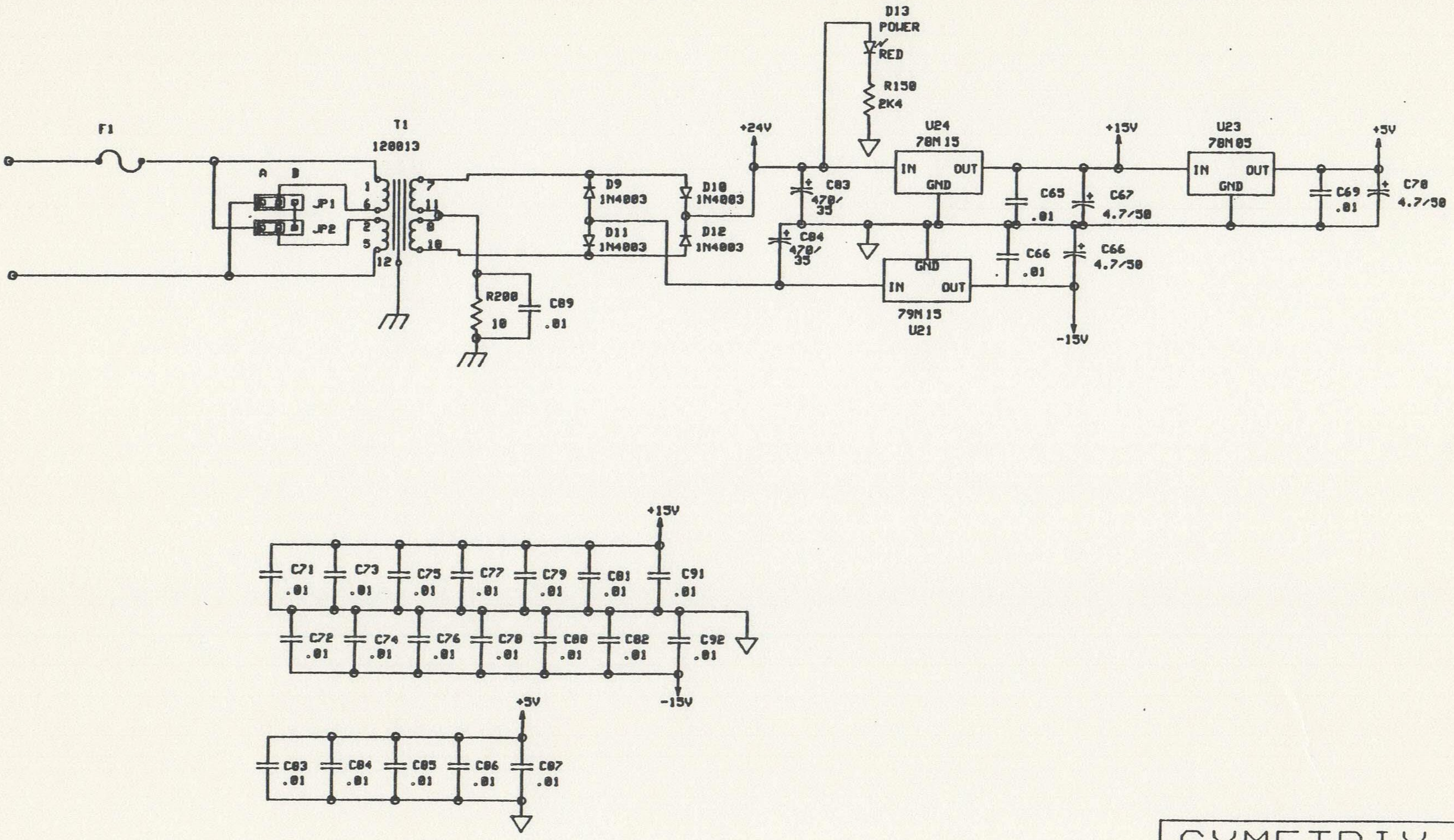
F1
T1
120013
A
B
JP1
JP2
1
6
2
5
12
7
11
8
10
R200
10
C89
.01
D9
1N4003
D11
1N4003
D10
1N4003
D12
1N4003
+24V
D13
POWER
RED
R150
2K4
C83
470/
35
C84
470/
35
U24
78M15
IN
OUT
GND
79M15
U21
+15V
C65
.01
C67
4.7/50
C66
.01
C66
4.7/50
-15V
U23
78M05
+5V
C69
.01
C70
4.7/50
+15V
C71
.01
C73
.01
C75
.01
C77
.01
C79
.01
C81
.01
C91
.01
C72
.01
C74
.01
C76
.01
C78
.01
C80
.01
C82
.01
C92
.01
-15V
+5V
C83
.01
C84
.01
C85
.01
C86
.01
C87
.01

SYMETRIX INC.

TITLE
SCHEMATIC 571
SPL COMPUTER

DWG NO 191740 REV E

DATE 4-16-87 SHT 5 OF 5

CHUCK E
CHEESE

HELEN
HENNY

JASPER

PASQUALLY

MUNCH

ELECTRONICS

MAINSTAGE CHARACTERS Cont.

GUEST DRUMS

TB2	BIRDS							
LED #9 1&2	MOUTH	DOORS	DOORS	DIMMER	MED.PAN	CHUCK E.	CENTER RED FLOOD	17&18
3&4	ROCK	STARS		USA	LG. PAN	JASPER	CENTER YELLOW FLOOD	19&20
5&6	CHASER ON	STARS		CONFEDERATE	SM. PAN	JASPER	CENTER BLUE FLOOD	21&22
7&8	CHASE LEFT	DRUM LITE		STATE	CLAP RAZZ	MUNCH	RIGHT RED FLOOD	23&24
9&10	CHASE RIGHT	OCTAL ROCK		CHUCK	CLAP	MUNCH	RIGHT YELLOW FLOOD	25&26
11&12				ITALIAN	ELEPHANT	BIRDS	RIGHT BLUE FLOOD	27&28
						BIRDS	SPARE	29&30
						SPARE	SPARE	31&32

MAIN STAGE CHARACTERS

SOL#	TB1	CHUCKIE HEADER 1 to 14	JASPER HEADER 2 to 14	PASQUALLY HEADER 3 to 14	MUNCH HEADER 4 to 14	GUEST HEADER 5 to 14	DRUMS HEADER 6 to 14	FRONT LIGHTS HEADER 7 to 14	BACK LIGHTS HEADER 8 to 14	OPTO
L1	1&2	MOUTH	MOUTH	MOUTH	MOUTH	MOUTH	CYMBAL	CLAP	GUEST	1&2
L2	3&4	HEAD LFT.	HEAD LFT.	HEAD LFT.	HEAD LFT.	HEAD LFT.	TRIANGLE	INTRO	CEC BACK	3&4
L3	5&6	HEAD RT.	HEAD RT.	HEAD RT.	HEAD RT.	HEAD RT.	SNARE	PASQUALLY	CEC BACK	5&6
L4	7&8	HEAD TILT	HEAD TILT	HANDS	LFT. ARM	HEAD TILT	BASS	PASQUALLY	CEC BACK	7&8
L5	9&10	EYES RT.	EYES RT.	EYES RT.	EYES RT.	EYES RT.	TAMBORINE	GUEST	JASPER BACK	9&10
L6	11&12	EYE LIDS	EYE LIDS	EYE LIDS	EYE LIDS	EYE LIDS	LG.BLOCK	GUEST	LEFT RED FLAG	11&12
L7	13&14	HAND	HAND	MUSTACHE	RT. ARM	HAND	SM.BLOCK	CHUCK E.	LEFT YELLOW FLAG	13&14
L8	15&16	EYES LFT.	EYES LFT.	EYES LFT.	EYES LFT.	EYES LFT.	BELL	CHUCK E.	LEFT BLUE FLAG	15&16

THE ROSETTA

The Rosetta is a chart that tells the header location as well as the movements and functions on the character and light driver boards. To read the chart, start at the left column labeled:

SOL. # (Solenoid) - This is the solenoid on the solenoid board located in the character.

TB #1 (Terminal Block Number One) - This is the number one terminal block on the solenoid board that the solenoids are connected to. There is also a TB 2 on the board and located at the bottom of the TB 1 column on the chart.

Columns three through eight are the character movement columns. Across the top of the columns is the name of the character, the word header, and the header connecting pins on the header chip.

Column ten is the back flood lights.

The last column (eleven) is labeled OPTO. This column indicates the terminals that all the lights are connected to. The terminal strips are located in the light bars in the ceiling.

NOTE: Remember not to short the terminals together (such as 1 & 2, 3 & 4, etc.). The even terminals are always hot with 24VDC. The odd terminals are switched ground. If you want to test a circuit you would read 24VDC between (for example) terminals 1 & 2 if that solenoid is turned on. If it is off you will not read the 24VDC, but should read the 24VDC between terminal 2 of RB 1 and TP1 which is ground.

SYM	ECO NO	REVISIONS DESCRIPTION	DATE	APPROVED

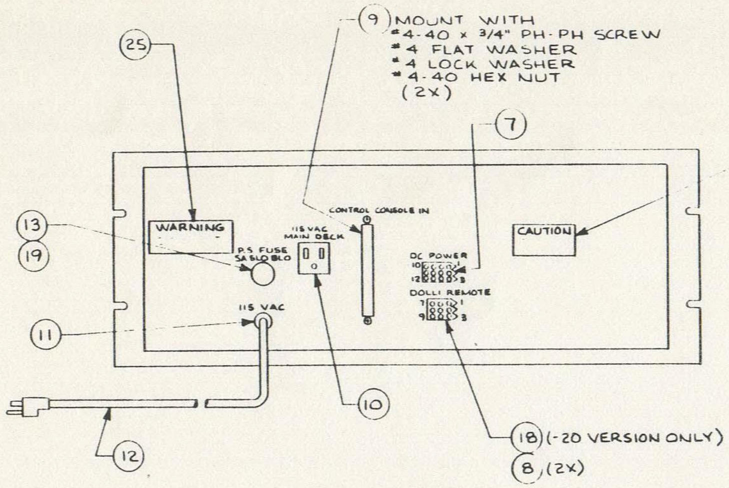
(9) MOUNT WITH
#4-40 x 3/4" PH-PH SCREW
#4 FLAT WASHER
#4 LOCK WASHER
#4-40 HEX NUT
(2X)
(25)
(7)
(24)
(13)
(19)
WARNING
P.S FUSE
5A SLO BLO
115 VAC
MAIN DECK
CONTROL CONSOLE IN
DC POWER
10
12
1
3
DOLLI REMOTE
7
9
CAUTION
(11)
115 VAC
(10)
(12)
(18) (-20 VERSION ONLY)
(8) (2X)

VIEW B-B

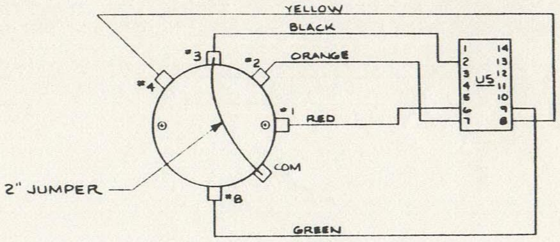
YELLOW
BLACK
ORANGE
RED
GREEN
#3
#2
#4
#1
COM
#8
2" JUMPER
US
1
2
3
4
5
6
7
14
13
12
11
10
9
8

DETAIL D (REAR VIEW)
SCALE: 2|1

DETAIL E

WIRING DIAGRAM FOR ITEM ㉑ - DC HARNESS ASSEMBLY				
FROM			TO	
PART NUMBER	PIN # - OR TERMINAL POSITION	WIRE COLOR	PART NUMBER	PIN # - OR TERMINAL POSITION
550-0004	5	BLACK	700-0005	+12V (-TERM.)
550-0004	2	GREEN	830-0002	FB2-4
550-0004	8	BLUE	830-0002	FB2-3
550-0004	11	BLACK	700-0005	-12V (+ TERM.)
550-0004	7	BLACK	700-0005	+5V (- TERM.)
550-0004	10	BLACK	700-0005	+5V (- TERM.)
550-0004	1	RED	830-0002	FB1-3
550-0004	4	RED	830-0002	FB1-3
550-0004	3	ORANGE	830-0010	FB3-1
550-0004	6	ORANGE	830-0010	FB3-1
550-0004	12	BLACK	700-0004	+24V (- TERM.)
550-0004	9	BLACK	700-0004	+24V (-TERM.)
700-0005	+12V (- TERM.)	BLACK	580-0009	5
700-0005	-12V (+ TERM.)	BLACK	580-0009	5
700-0005	+ 5V (- TERM.)	BLACK	580-0009	5
700-0004	+24V (- TERM.)	BLACK	580-0009	5
700-0005	+12V (- TERM)	BLACK	TEST POINT	GND
830-0002	FB2-4	GREEN	TEST POINT	+12 VDC
830-0002	FB2-3	BLUE	TEST POINT	-12 VDC
830-0002	FB1-3	RED	TEST POINT	+ 5 VDC
830-0010	FB3-1	ORANGE	TEST POINT	+ 24 VDC
830-0002	FB1-1	RED	700-0005	+5V (+ TERM)
830-0002	FB2-1	BLUE	700-0005	-12V (- TERM)
830-0002	FB2-2	GREEN	700-0005	+12V (+ TERM)
830-0010	FB3-3	ORANGE	700-0004	+24V (+ TERM)

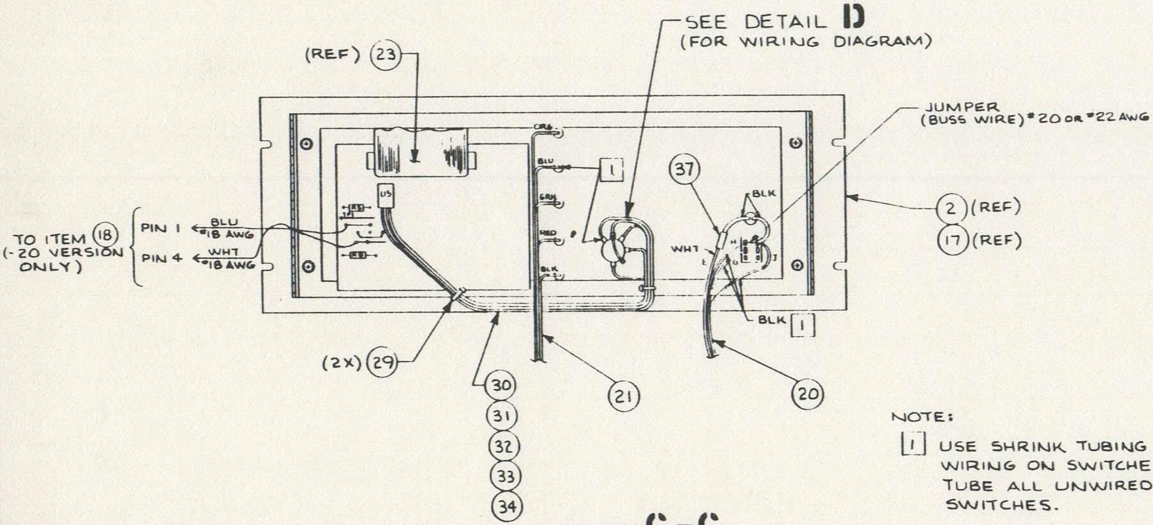
SEE DETAIL D
(FOR WIRING DIAGRAM)
(REF) (23)
JUMPER
(BUSS WIRE) #20 OR #22 AWG
TO ITEM (18)
(-20 VERSION ONLY)
PIN 1
BLU
#18 AWG
PIN 4
WHT
#18 AWG
US
ORG
BLU
GRN
RED
BLK
1
(37)
BLK
WHT
BLK 1
(2) (REF)
(17) (REF)
(2X) (29)
(30)
(31)
(32)
(33)
(34)
(21)
(20)

VIEW C-C

NOTE:

1. USE SHRINK TUBING ON ALL WIRING ON SWITCHES. SHRINK TUBE ALL UNWIRED LEGS ON SWITCHES.

NEXT ASSY	USED ON
APPLICATION	

MATERIAL
SEE P/L

FINISH

DO NOT SCALE DRAWING

DRAWN BY DATE
CHECKED
ENGINEER
PROJECT ENGINEER
MFG ENGINEER

Pizza Time Theatre Inc.
10060 Bubb Road
Cupertino, CA 95014

TITLE
CONTROL CHASSIS ASSEMBLY

SIZE D | DRAWING NO 00-0012 -10 -20 | REV E
SCALE 1/2 & NOTED | SHEET 3 OF 5

B	0518	[illegible] NEW DRAWING	[illegible]	[illegible]
C	0549	[illegible]	[illegible]	
D	0812	[illegible]	[illegible]	
E	0950	[illegible]	[illegible]	BH

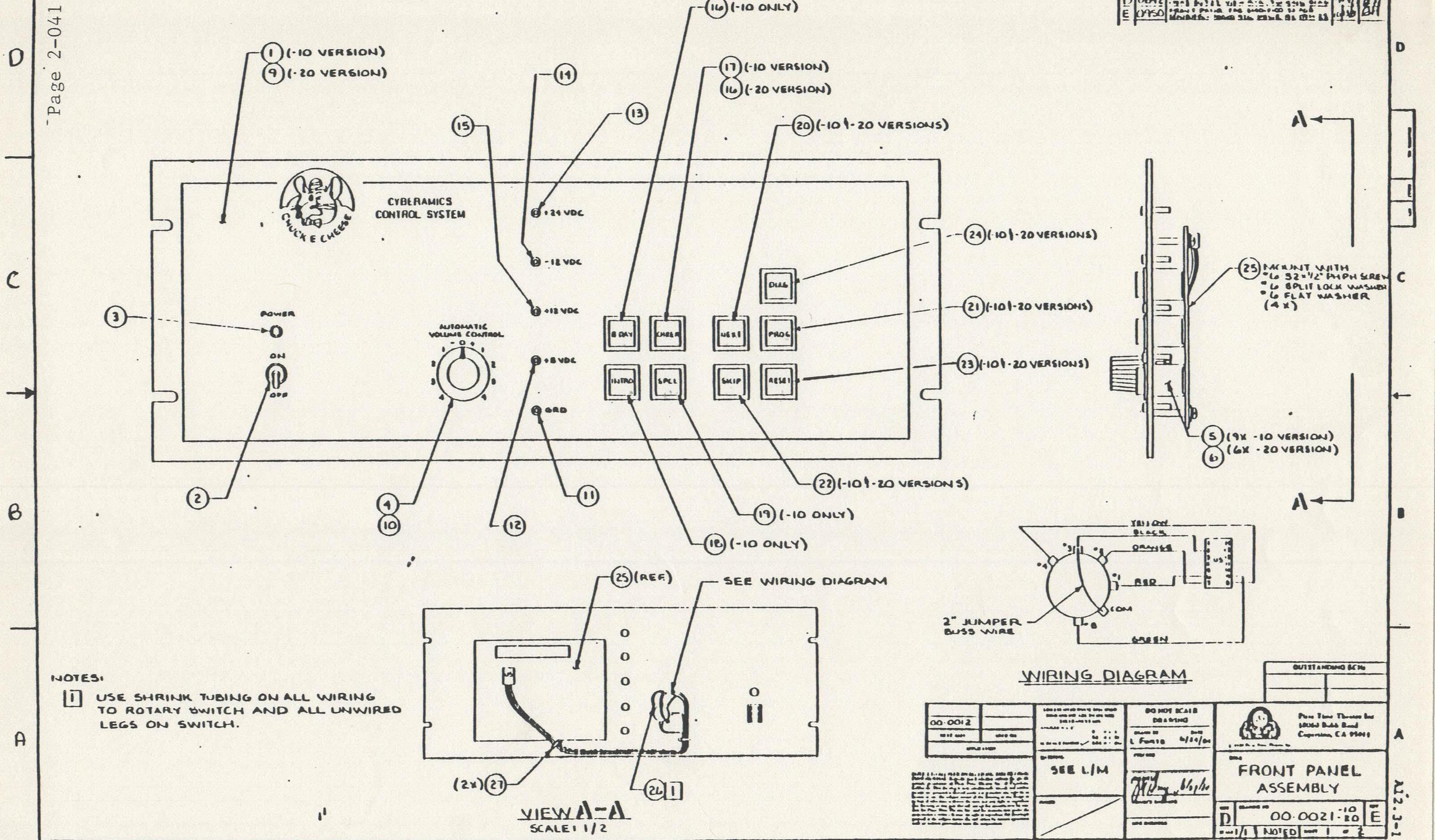

8
7
6
5
4
3
2
1
D
C
B
A
1 (-10 VERSION)
9 (-20 VERSION)
14
13
15
16 (-10 ONLY)
17 (-10 VERSION)
16 (-20 VERSION)
20 (-10 & -20 VERSIONS)
CYBERAMICS
CONTROL SYSTEM
CHUCK E CHEESE
+24 VDC
-12 VDC
+12 VDC
+5 VDC
GRD
POWER
ON
OFF
AUTOMATIC
VOLUME CONTROL
3
B DAY
CHEER
NEXT
PROG
DIAG
INTRO
SPCL
SKIP
RESET
24 (-10 & -20 VERSIONS)
21 (-10 & -20 VERSIONS)
23 (-10 & -20 VERSIONS)
22 (-10 & -20 VERSIONS)
19 (-10 ONLY)
18 (-10 ONLY)
2
4
10
12
11
A
25 MOUNT WITH
• 6 32×1/2" PHPH SCREW
• 6 SPLIT LOCK WASHER
• 6 FLAT WASHER
(4 X)
5 (9X -10 VERSION)
6 (6X -20 VERSION)
YELLOW
BLACK
ORANGE
RED
GREEN
COM
2" JUMPER
BUSS WIRE
25 (REF.)
SEE WIRING DIAGRAM
(2X) 27
26 1

WIRING DIAGRAM

VIEW A-A
SCALE: 1/2

NOTES:

1 USE SHRINK TUBING ON ALL WIRING TO ROTARY SWITCH AND ALL UNWIRED LEGS ON SWITCH.

00-0012

SEE L/M

DO NOT SCALE DRAWING

L Fonte 6/24/86

Pizza Time Theatre Inc
[illegible] Bubb Road
Cupertino, CA 95014

FRONT PANEL
ASSEMBLY

D 00-0021-10/-20 E

1/1 NOTED 1 of 2

A2.3-1

SYM	ECO NO	REVISIONS DESCRIPTION	DATE	APPROVED

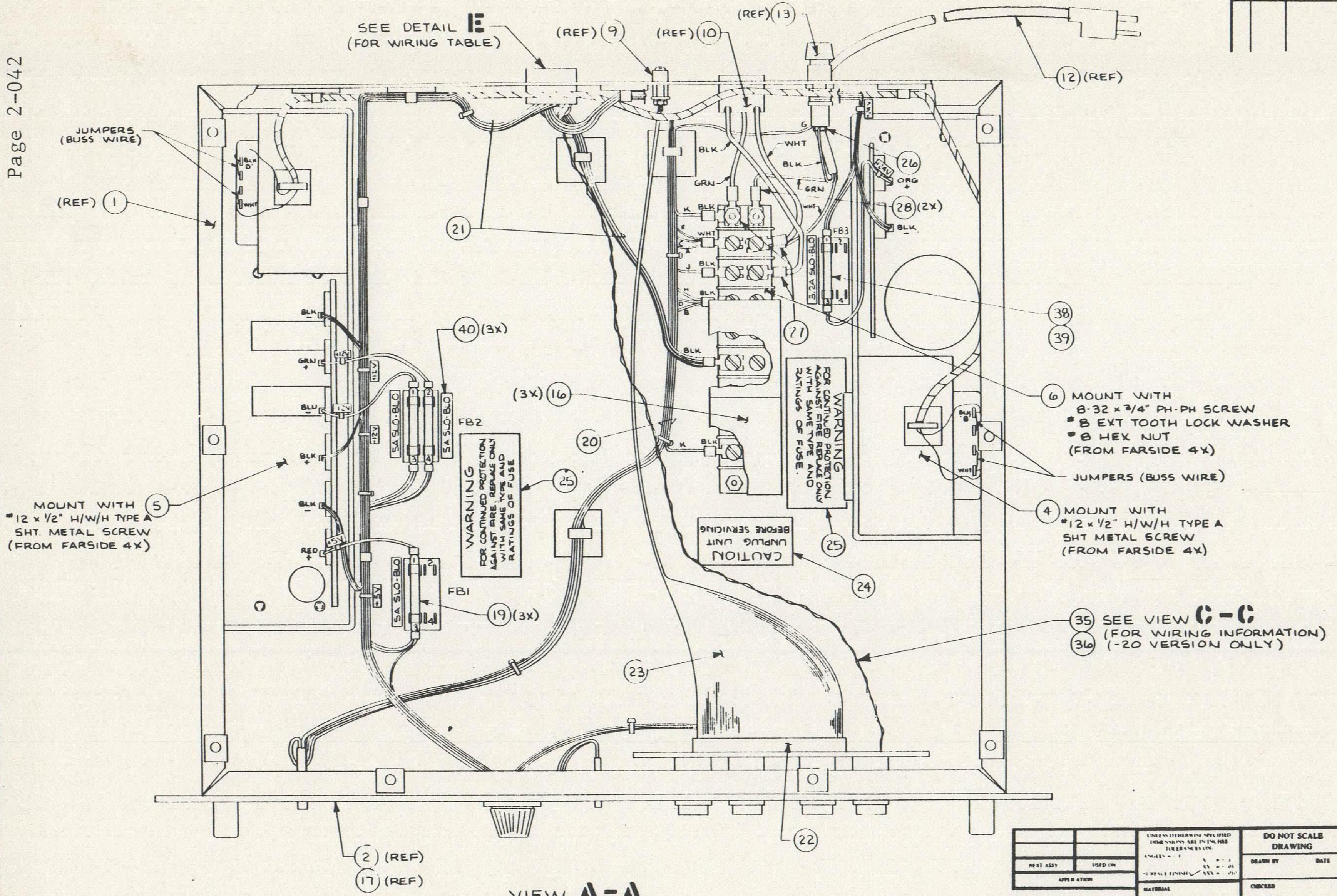
SEE DETAIL E
(FOR WIRING TABLE)
(REF) 9
(REF) 10
(REF) 13
12 (REF)
JUMPERS
(BUSS WIRE)
BLK
WHT
(REF) 1
G
BLK
WHT
BLK
GRN
GRN
26
+24V
ORG
+
K BLK
E WHT
C
A
J BLK
H BLK
D
B
28 (2X)
BLK
−
FB3
3.2A SLO-BLO
21
27
38
39
BLK
+
GRN
+
+12V
BLU
−
−12V
BLK
−
BLK
−
RED
+
+5V
40 (3X)
5A SLO-BLO
FB2
5A SLO-BLO
(3X) 16
20
K BLK
WARNING
FOR CONTINUED PROTECTION
AGAINST FIRE REPLACE ONLY
WITH SAME TYPE AND
RATINGS OF FUSE
25
WARNING
FOR CONTINUED PROTECTION
AGAINST FIRE REPLACE ONLY
WITH SAME TYPE AND
RATINGS OF FUSE.
25
6 MOUNT WITH
8-32 x 3/4" PH-PH SCREW
#8 EXT TOOTH LOCK WASHER
#8 HEX NUT
(FROM FARSIDE 4X)
JUMPERS (BUSS WIRE)
BLK
WHT
4 MOUNT WITH
#12 x 1/2" H/W/H TYPE A
SHT METAL SCREW
(FROM FARSIDE 4X)
MOUNT WITH 5
#12 x 1/2" H/W/H TYPE A
SHT. METAL SCREW
(FROM FARSIDE 4X)
CAUTION
UNPLUG UNIT
BEFORE SERVICING
24
FB1
5A SLO-BLO
19 (3X)
35 SEE VIEW C-C
(FOR WIRING INFORMATION)
36 (-20 VERSION ONLY)
23
22
2 (REF)
17 (REF)

VIEW A-A
SCALE: FULL

OUTSTANDING ECNs	

NEXT ASSY	USED ON
APPLICATION	

UNLESS OTHERWISE SPECIFIED
DIMENSIONS ARE IN INCHES
TOLERANCES ON:
ANGLES ± 1
X ± .1
XX ± .01
SURFACE FINISH ✓ XXX ± .010

MATERIAL
SEE P/L

FINISH

DO NOT SCALE DRAWING

DRAWN BY DATE

CHECKED

ENGINEER

PROJECT ENGINEER

MFG ENGINEER

Pizza Time Theatre Inc.
10060 Bubb Road
Cupertino, CA 95014

© 1979 Pizza Time Theatre Inc.

TITLE
CONTROL CHASSIS
ASSEMBLY

SIZE D
DRAWING NO 00-0012 -10 -20
REV E
SCALE 1/2 & NOTED
SHEET 2 OF 5

NOTICE TO ALL PERSONS RECEIVING THIS DRAWING: CONFIDENTIAL. Reproduction forbidden without the specific written permission of Pizza Time Theatre Inc. of Cupertino, California. This drawing is only conditionally issued, and neither receipt nor possession thereof confers or transfers any right in, or license to use, the subject matter of the drawing or any design or technical information shown thereon, nor any right to reproduce this drawing or any part thereof, except for manufacture by vendors for Pizza Time Theatre Inc. and for manufacture under the corporation's written license, no right to reproduce this drawing is granted or the subject matter thereof unless by written agreement with or written permission from the corporation.

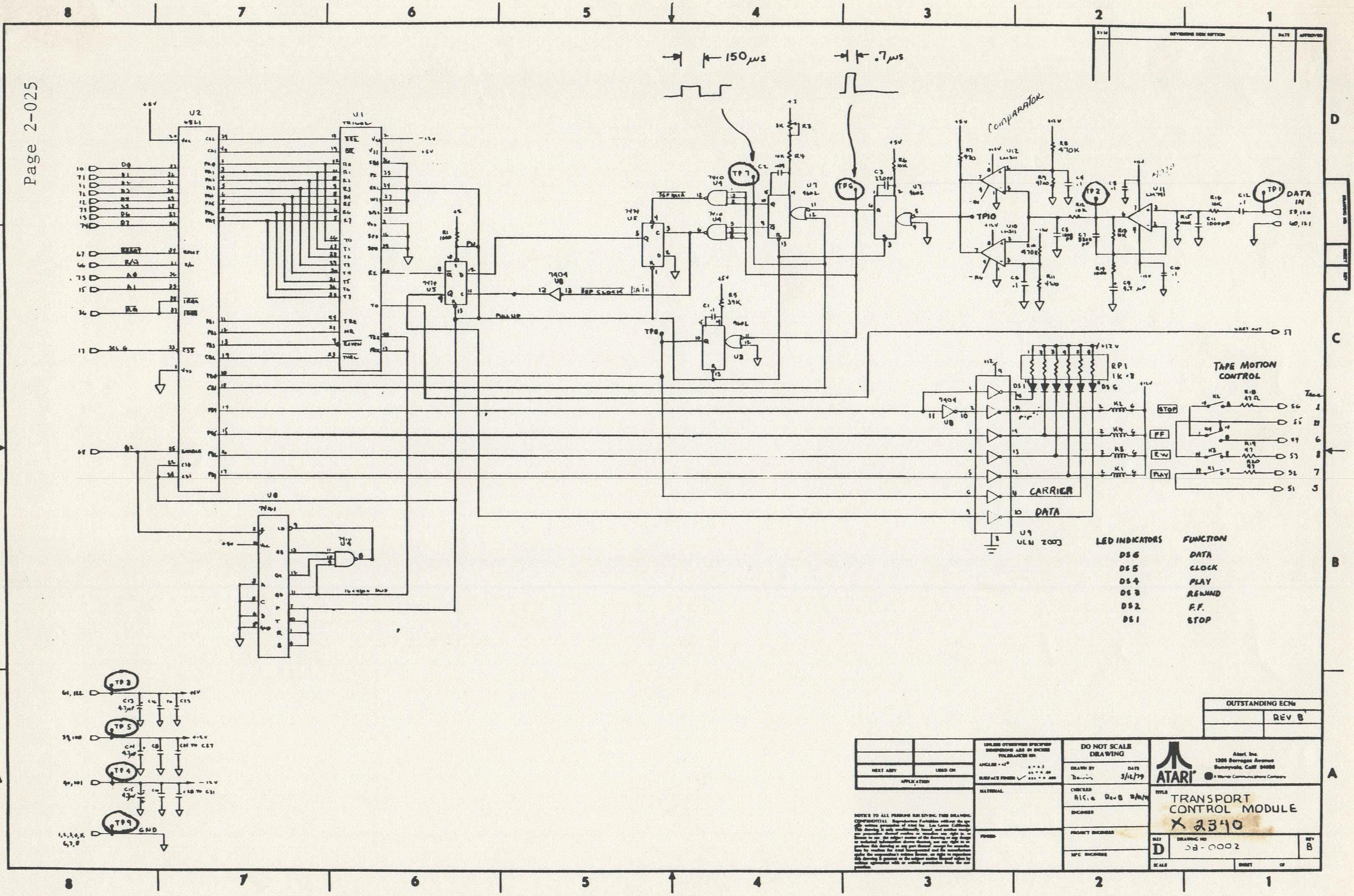
U2
6821
U1
TRICOL
U5
7474
U8
7404
SEP CLOCK
PULL UP
U4
7410
U7
9602
TP7
TP6
TP8
TP10
TP2
TP1
150 μs
.7 μs
COMPARATOR
U12
LM311
U10
LM311
U11
LM741
R8
470K
R5
39K
DATA IN
UART OUT
U6
74161
U9
ULN 2003
RP1
1K × 8
DS1
DS6
CARRIER
DATA
STOP
FF
RW
PLAY
K1
K2
K3
K4
TAPE MOTION CONTROL
TP3
TP4
TP5
TP9
+5V
+12V
-12V
GND

LED INDICATORS	FUNCTION
DS 6	DATA
DS 5	CLOCK
DS 4	PLAY
DS 3	REWIND
DS 2	F.F.
DS 1	STOP

OUTSTANDING ECNs
REV B

DO NOT SCALE DRAWING

DRAWN BY Davis DATE 3/12/79
CHECKED Alicia Rev B

Atari, Inc.
1265 Borregas Avenue
Sunnyvale, Calif. 94086
A Warner Communications Company

TITLE
TRANSPORT
CONTROL MODULE
X 2340

SIZE D
DRAWING NO 38-0002
REV B

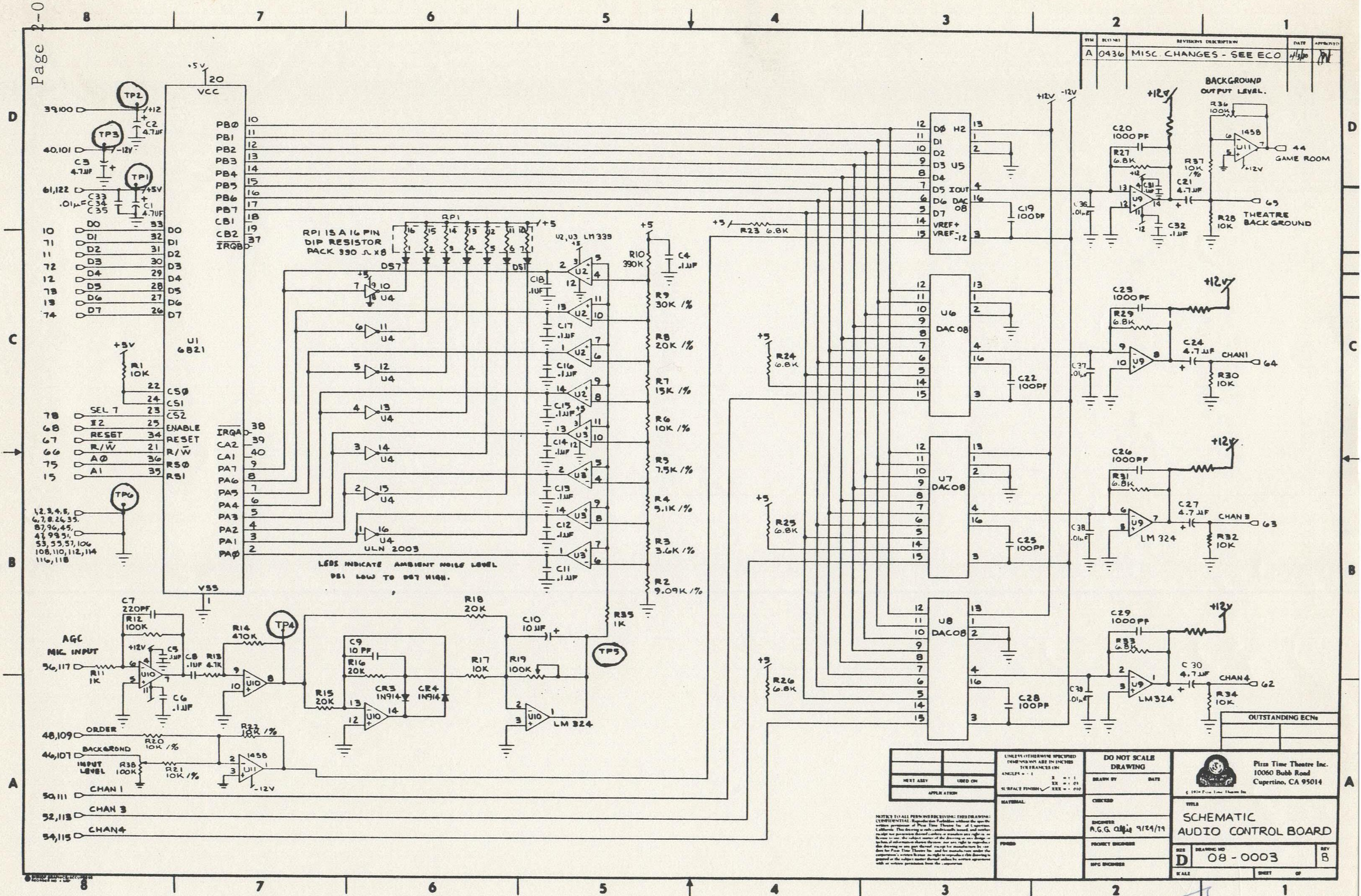
U1 6821
VCC
VSS
PB0 PB1 PB2 PB3 PB4 PB5 PB6 PB7 CB1 CB2 IRQB
D0 D1 D2 D3 D4 D5 D6 D7
CS0 CS1 CS2 ENABLE RESET R/W RS0 RS1
IRQA CA2 CA1 PA7 PA6 PA5 PA4 PA3 PA2 PA1 PA0
TP1 TP2 TP3 TP4 TP5 TP6
39,100
40,101
61,122
SEL 7
ENABLE
RESET
R/W
A0
A1
C33 C34 C35 .01µF
C1 4.7UF
C2 4.7UF
C3 4.7UF
R1 10K
RP1 IS A 16 PIN DIP RESISTOR PACK 390 Ω x8
DS7
DS1
U4 ULN 2003
U2, U3 LM339
R10 390K
R9 30K 1%
R8 20K 1%
R7 15K 1%
R6 10K 1%
R5 7.5K 1%
R4 5.1K 1%
R3 3.6K 1%
R2 9.09K 1%
R35 1K
C4 .1UF
LEDS INDICATE AMBIENT NOISE LEVEL DS1 LOW TO DS7 HIGH.
AGC MIC. INPUT
56,117
R11 1K
C7 220PF
R12 100K
C5 .1UF
C6 .1UF
C8 .1UF
R13 4.7K
R14 470K
R18 20K
C10 10UF
C9 10 PF
R16 20K
R15 20K
CR3 1N914
CR4 1N914
R17 10K
R19 100K
U10 LM 324
48,109 ORDER
46,107 BACKGROND
INPUT LEVEL R38 100K
R20 10K 1%
R21 10K 1%
R22 10K 1%
U11 1458
50,111 CHAN 1
52,113 CHAN 3
54,115 CHAN4
+5 R23 6.8K
U5 DAC 08
D0 D1 D2 D3 D4 D5 D6 D7 VREF+ VREF- IOUT
U6 DAC 08
U7 DAC08
U8 DAC08
R24 6.8K
R25 6.8K
R26 6.8K
C19 100PF
C22 100PF
C25 100PF
C28 100PF
C36 .01µF
C37 .01µF
C38 .01µF
C39 .01µF
BACKGROUND OUTPUT LEVEL.
R36 100K
1458 U11
44 GAME ROOM
C20 1000 PF
R27 6.8K
C31 .1µF
C32 .1µF
R37 10K 1%
C21 4.7UF
R28 10K
63 THEATRE BACKGROUND
C23 1000 PF
R29 6.8K
C24 4.7UF
CHAN1 64
R30 10K
C26 1000PF
R31 6.8K
C27 4.7UF
CHAN 3 63
R32 10K
LM 324
C29 1000PF
R33 6.8K
C30 4.7UF
CHAN4 62
R34 10K
+12V -12V +5V

LTR	ECO NO	REVISIONS DESCRIPTION	DATE	APPROVED
A	0436	MISC. CHANGES - SEE ECO	4/3/80	

OUTSTANDING ECNs

NEXT ASSY | USED ON

APPLICATION

UNLESS OTHERWISE SPECIFIED DIMENSIONS ARE IN INCHES TOLERANCES ON
ANGLES ± 1
X ± .1
XX ± .01
XXX ± .010
SURFACE FINISH ✓

MATERIAL

FINISH

DO NOT SCALE DRAWING

DRAWN BY DATE

CHECKED

ENGINEER
A.G.G. alfie 9/24/79

PROJECT ENGINEER

MFG ENGINEER

Pizza Time Theatre Inc.
10060 Bubb Road
Cupertino, CA 95014

© 1979 Pizza Time Theatre Inc.

TITLE
SCHEMATIC
AUDIO CONTROL BOARD

SIZE D
DRAWING NO 08-0003
REV B
SCALE
SHEET OF

NOTICE TO ALL PERSONS RECEIVING THIS DRAWING: CONFIDENTIAL: Reproduction Forbidden without the specific written permission of Pizza Time Theatre Inc. of Cupertino, California. This drawing is only conditionally issued, and neither receipt nor possession thereof confers or transfers any right in, or license to use, the subject matter of the drawing or any design or technical information shown thereon, nor any right to reproduce this drawing or any part thereof except for manufacture by vendors for Pizza Time Theatre Inc. and for manufacture under the corporation's written license; no right to reproduce this drawing is granted or the subject matter thereof unless by written agreement with or written permission from the corporation.

2340

SYM	ECO NO	REVISIONS DESCRIPTION	DATE	APPROVED
A	1518	PRODUCTION RELEASE	11/22/82	C.J

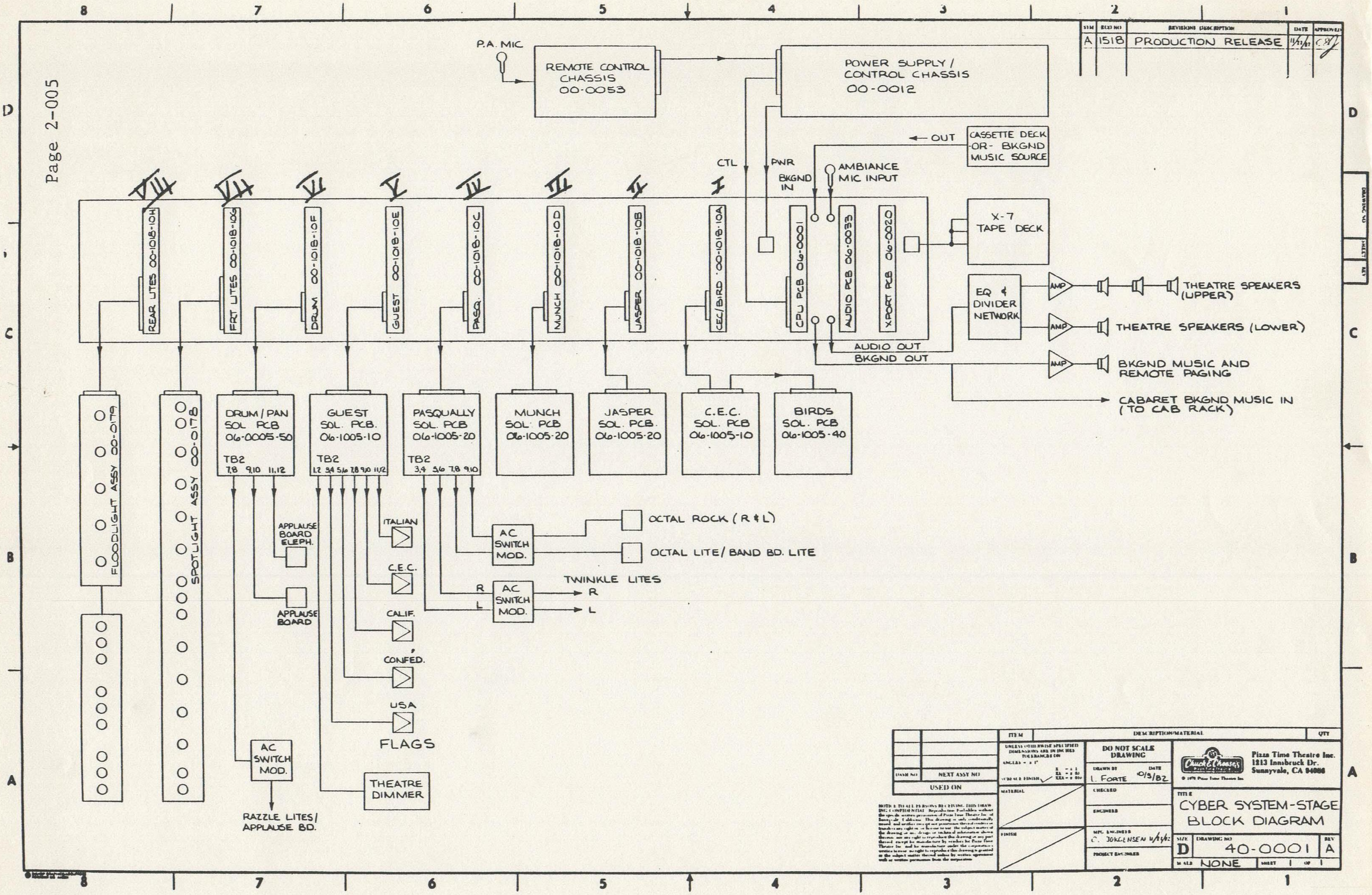
P.A. MIC
REMOTE CONTROL CHASSIS 00-0053
POWER SUPPLY / CONTROL CHASSIS 00-0012
CASSETTE DECK -OR- BKGND MUSIC SOURCE
OUT
CTL
PWR
BKGND IN
AMBIANCE MIC INPUT
VIII
VII
VI
V
IV
III
II
I
REAR LITES 00-1018-10H
FRT LITES 00-1018-10G
DRUM 00-1018-10F
GUEST 00-1018-10E
PASQ. 00-1018-10J
MUNCH 00-1018-10D
JASPER 00-1018-10B
CEC/BIRD 00-1018-10A
CPU PCB 06-0001
AUDIO PCB 06-0033
XPORT PCB 06-0020
X-7 TAPE DECK
EQ & DIVIDER NETWORK
AMP
THEATRE SPEAKERS (UPPER)
THEATRE SPEAKERS (LOWER)
AUDIO OUT
BKGND OUT
BKGND MUSIC AND REMOTE PAGING
CABARET BKGND MUSIC IN (TO CAB RACK)
FLOODLIGHT ASSY 00-0179
SPOTLIGHT ASSY 00-0178
DRUM / PAN SOL PCB 06-0005-50
TB2 7,8 9,10 11,12
GUEST SOL. PCB. 06-1005-10
TB2 1,2 3,4 5,6 7,8 9,10 11,12
PASQUALLY SOL. PCB 06-1005-20
TB2 3,4 5,6 7,8 9,10
MUNCH SOL. PCB 06-1005-20
JASPER SOL. PCB. 06-1005-20
C.E.C. SOL. PCB 06-1005-10
BIRDS SOL. PCB 06-1005-40
APPLAUSE BOARD ELEPH.
APPLAUSE BOARD
AC SWITCH MOD.
RAZZLE LITES/ APPLAUSE BD.
ITALIAN
C.E.C.
CALIF.
CONFED.
USA
FLAGS
THEATRE DIMMER
AC SWITCH MOD.
OCTAL ROCK (R & L)
OCTAL LITE/ BAND BD. LITE
R
L
AC SWITCH MOD.
TWINKLE LITES
R
L

ITEM	DESCRIPTION/MATERIAL	QTY

DASH NO	NEXT ASSY NO
USED ON	

UNLESS OTHERWISE SPECIFIED DIMENSIONS ARE IN INCHES TOLERANCES ON
ANGLES = ± 1°
X = ± .1
XX = ± .03
XXX = ± .010
SURFACE FINISH ✓

MATERIAL

FINISH

DO NOT SCALE DRAWING

DRAWN BY L. FORTE DATE 10/3/82
CHECKED
ENGINEER
MFG. ENGINEER C. JORGENSEN 11/22/82
PROJECT ENGINEER

Pizza Time Theatre Inc.
1213 Innsbruck Dr.
Sunnyvale, CA 94086

© 1979 Pizza Time Theatre Inc

TITLE
CYBER SYSTEM-STAGE BLOCK DIAGRAM

SIZE D DRAWING NO 40-0001 REV A
SCALE NONE SHEET 1 OF 1

NOTICE TO ALL PERSONS RECEIVING THIS DRAWING CONFIDENTIAL. Reproduction forbidden without the specific written permission of Pizza Time Theatre Inc. of Sunnyvale, California. This drawing is only conditionally issued, and neither receipt nor possession thereof confers or transfers any right in, or license to use, the subject matter of the drawing or any design or technical information shown thereon, nor any right to reproduce this drawing or any part thereof, except for manufacture by vendors for Pizza Time Theatre Inc. and for manufacture under the corporation's written license; no right to reproduce this drawing is granted or the subject matter thereof unless by written agreement with or written permission from the corporation.

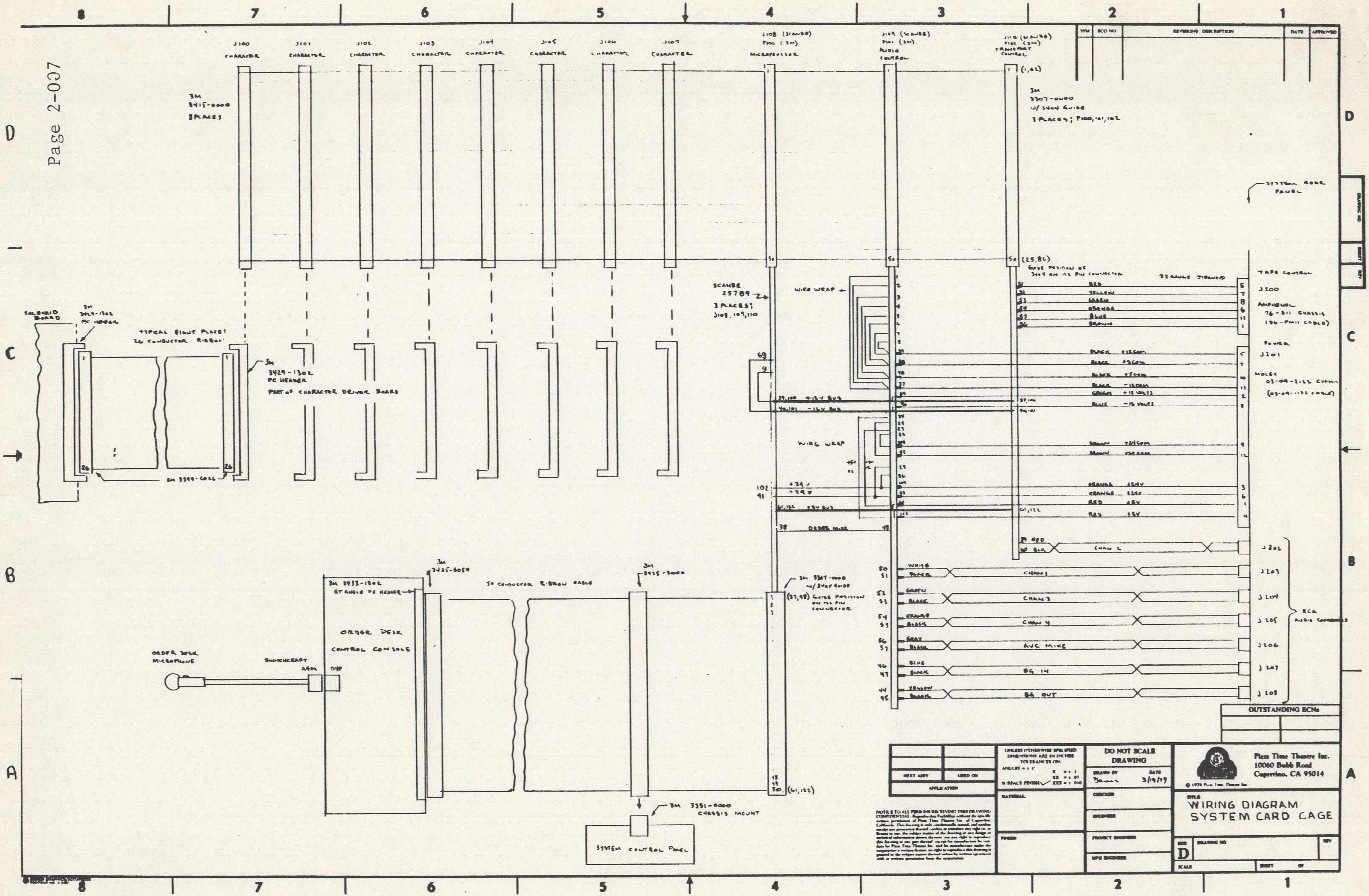
8
7
6
5
4
3
2
1
D
C
B
A
ITM
BCN NO.
REVISIONS DESCRIPTION
DATE
APPROVED
J100 CHARACTER
J101 CHARACTER
J102 CHARACTER
J103 CHARACTER
J104 CHARACTER
J105 CHARACTER
J106 CHARACTER
J107 CHARACTER
J108 (SCANBE) P100 (3M) MICROPROCESSOR
J109 (SCANBE) P101 (3M) AUDIO CONTROL
J110 (SCANBE) P102 (3M) TRANSPORT CONTROL
3M 3415-0000 8 PLACES
(1,62)
3M 3307-0000 w/ 3404 GUIDE 3 PLACES; P100,101,102
SYSTEM REAR PANEL
50
(25,86)
GUIDE POSITION OF 3404 ON 122 PIN CONNECTOR
22 GAUGE STRANDED
SCANBE 25789 3 PLACES; J108, 109, 110
WIRE WRAP
TAPE CONTROL J200
AMPHENOL 76-511 CHASSIS (86-PM11 CABLE)
RED
YELLOW
GREEN
ORANGE
BLUE
BROWN
POWER J201
MOLEX 03-09-2122 CHASSIS (03-09-1121 CABLE)
BLACK +12COM
BLACK +5COM
BLACK +5COM
BLACK -12COM
GREEN +12 VOLTS
BLUE -12 VOLTS
69
9
39,100 +12V BUS
40,101 -12V BUS
WIRE WRAP
BROWN +24COM
BROWN +24COM
102
41
+24V
+24V
61,122 +5V BUS
ORANGE +24V
ORANGE +24V
RED +5V
RED +5V
38
ORDER MIKE
48
59 RED
60 BLK
CHAN 2
J202
50 WHITE
51 BLACK
CHAN 1
J203
52 GREEN
53 BLACK
CHAN 3
J204
54 ORANGE
55 BLACK
CHAN 4
J205
56 GRAY
57 BLACK
AVC MIKE
J206
46 BLUE
47 BLACK
BG IN
J207
44 YELLOW
45 BLACK
BG OUT
J208
RCA AUDIO CONNECTORS
SOLENOID BOARD
3M 3429-1302 P.C. HEADER
TYPICAL EIGHT PLACES 26 CONDUCTOR RIBBON
3M 3429-1302 PC HEADER PART OF CHARACTER DRIVER BOARD
1
26
3M 3399-6026
3M 3433-1302 RT ANGLE PC HEADER
3M 3425-6050
50 CONDUCTOR RIBBON CABLE
3M 3425-3000
3M 3307-0000 w/ 3404 GUIDE
(37,98) GUIDE POSITION ON 122 PIN CONNECTOR
ORDER DESK CONTROL CONSOLE
ORDER DESK MICROPHONE
SWITCHCRAFT A4M D4F
48
49
50
(61,122)
3M 3391-0000 CHASSIS MOUNT
SYSTEM CONTROL PANEL

OUTSTANDING BCNs

NEXT ASSY	USED ON
APPLICATION	

UNLESS OTHERWISE SPECIFIED DIMENSIONS ARE IN INCHES TOLERANCES ON:
ANGLES = ± 1°
X = ± .1
XX = ± .01
XXX = ± .010
SURFACE FINISH ✓

MATERIAL

FINISH

DO NOT SCALE DRAWING

DRAWN BY Dennis
DATE 3/19/79
CHECKED
ENGINEER
PROJECT ENGINEER
MFG ENGINEER

Pizza Time Theatre Inc.
10060 Bubb Road
Cupertino, CA 95014

© 1979 Pizza Time Theatre Inc

TITLE
WIRING DIAGRAM
SYSTEM CARD CAGE

SIZE D
DRAWING NO
REV
SCALE
SHEET OF

NOTICE TO ALL PERSONS RECEIVING THIS DRAWING CONFIDENTIAL: Reproduction Forbidden without the specific written permission of Pizza Time Theatre Inc. of Cupertino, California. This drawing is only conditionally issued, and neither receipt nor possession thereof confers or transfers any right in, or license to use, the subject matter of the drawing or any design or technical information shown thereon, nor any right to reproduce this drawing or any part thereof except for manufacture by vendors for Pizza Time Theatre Inc. and for manufacture under the corporation's written license, no right to reproduce this drawing is granted or the subject matter thereof unless by written agreement with or written permission from the corporation.

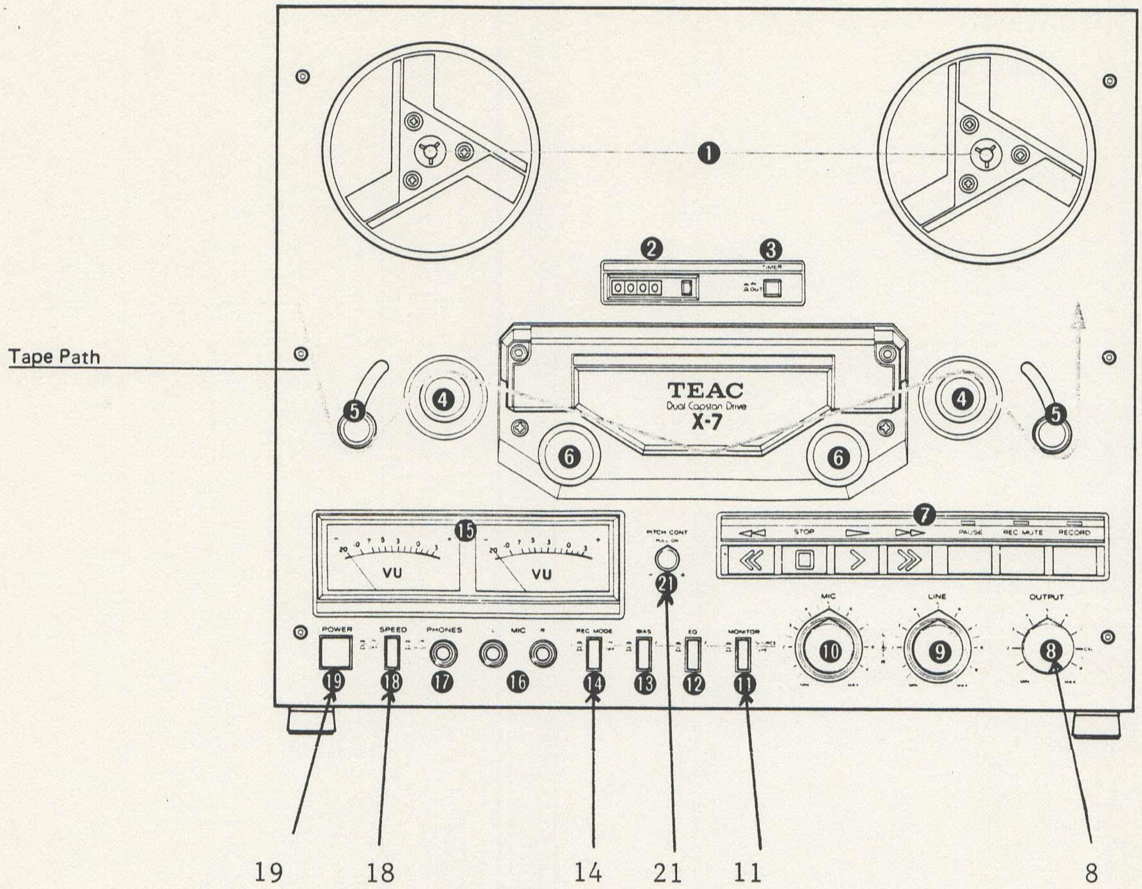
Tape Path
1
2
3
TIMER
TEAC
Dual Capstan Drive
X-7
4
5
6
7
STOP
PAUSE
REC MUTE
RECORD
15
VU
VU
PITCH CONT
MIC
LINE
OUTPUT
POWER
SPEED
PHONES
L
MIC
R
REC MODE
BIAS
EQ
MONITOR
19
18
17
16
14
13
12
11
21
10
9
8
19
18
14
21
11
8

19. Push "ON"
18. Speed push "LOW"
14. Rec to "OFF"
21. Pitch push to "OFF"
11. Monitor to "TAPE"
8. Output to 3 DB on VU meter

X-7 and X7 MARK II TAPE DECK

Weekly Maintenance Cont.

All of the air cylinders except the mouth cylinder are sealed units and rebuilding them should never be attempted. The mouth cylinder can be disassembled, cleaned, and rebuilt with only typical wear points being the threaded bushing (and the O-ring underneath it) on the shaft. Graphit, WD-40, and similar products should NEVER be used anywhere on the animation.

10. With CLEAN HANDS, re-dress character, remove any spots from clothing, brush and fluff as per character cosmetic instructions.

11. Perform a DR. DUCK'S Diagnostic Test on the characters having maintenance performed.

How to Use Dr. Duck's Diagnostic

Stage and Shelf Cyberamic Systems:

To play ALL character diagnostics sequentially:

PRESS	TO GET
RESET	
PROG	
DIAG	Lights
NEXT	Warblettes
NEXT	Munch
NEXT	Jasper
NEXT	Chuck E. Cheese
B'DAY	Guest
CHEER	Pasqually
SPECIAL	Band
INTRO	Clapper/Flags
NEXT	15 Min. of Work Light

To play DIAGNOSTICS by individual character.............

CHARACTER	PRESS						
Lights	RESET	PROG	DIAG				
Warblettes	RESET	PROG	NEXT				
Munch	RESET	PROG	SKIP	NEXT			
Jasper	RESET	PROG	SKIP	SKIP	NEXT		
Chuck E. Cheese	RESET	PROG	SKIP	SKIP	SKIP	NEXT	
Guest	RESET	PROG	B'DAY				
Pasqually	RESET	PROG	CHEER				
Band	RESET	PROG	SPECIAL				
Clapper/Flags	RESET	PROG	INTO				
15" of Lights	RESET	PROG	SKIP	SKIP	SKIP	SKIP	NEXT

LOUNGE

THE KINGS MAP

SOL#	TB1#	HEADER 1 to 14	HEADER 2 to 14	LIGHT BAR COMMANDS 7 to 14
L1	1&2	MOUTH	FOOT	SPOT CLEAR
L2	3&4	EYES RIGHT	STRUM	SPOT RED
L3	5&6	EYES LEFT	FRET	SPOT BLUE
L4	7&8		LEFT LEG	SPOT RED
L5	9&10	EARS	RIGHT LEG	SPOT AMBER
L6	11&12	HEAD RIGHT	EYELIDS	
L7	13&14	HEAD LEFT		
L8	15&16	HEAD BACK		

TB2#		
1&2	STAGE RIGHT LITE	SIGN
3&4	RIGHT CENTER LITE	TIVOLI
5&6	CENTER LITE	
7&8	LEFT CENTER LITE	
9&10	STAGE LEFT LITE	
11&12	STOOLS	

A1. Stage System General Information

A2. Character
Mech. Final

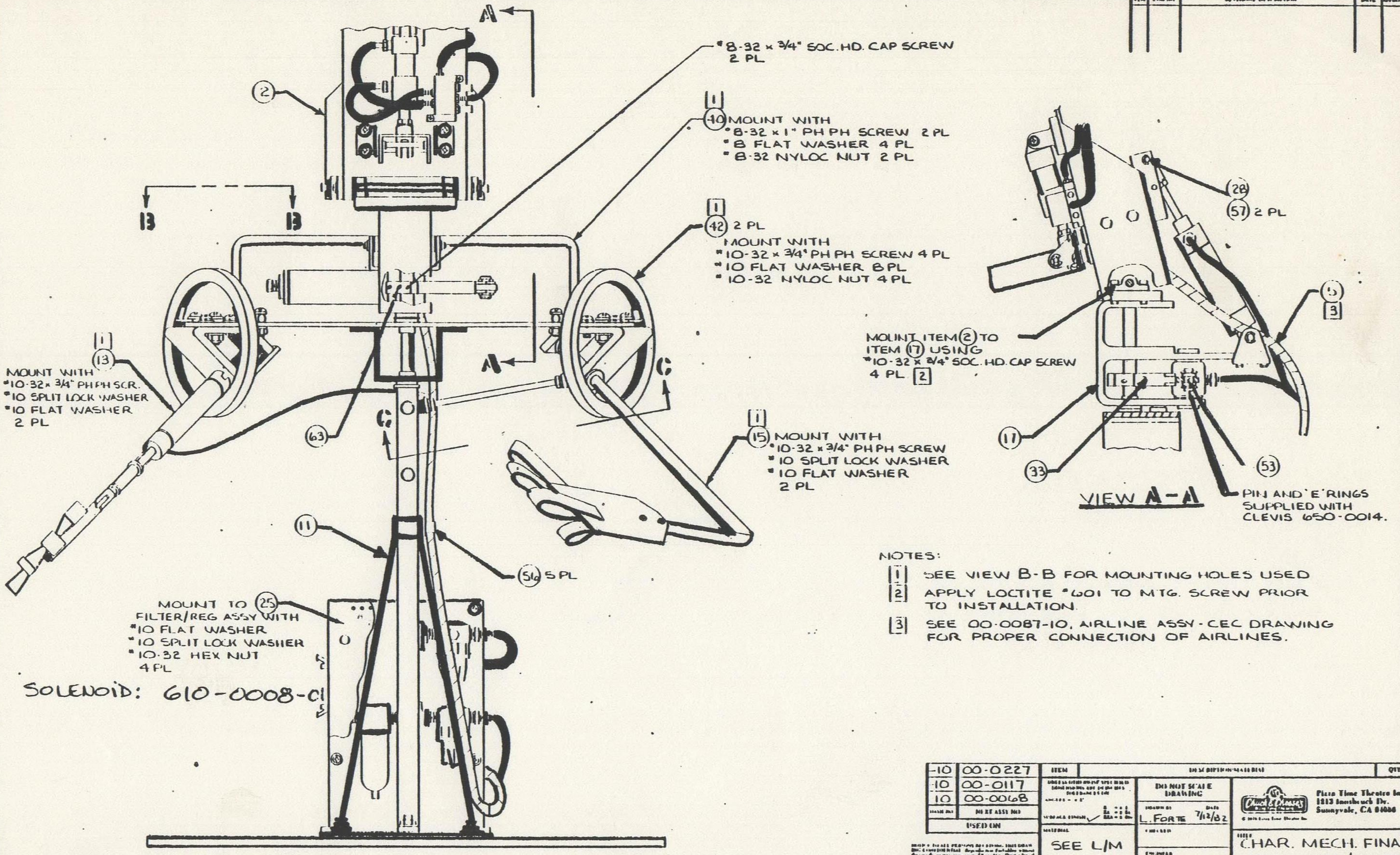
A
A
B
B
C
C
②
# 8-32 × 3/4" SOC. HD. CAP SCREW 2 PL
1
40 MOUNT WITH
# 8-32 × 1" PH PH SCREW 2 PL
# 8 FLAT WASHER 4 PL
# 8-32 NYLOC NUT 2 PL
1
42 2 PL
MOUNT WITH
# 10-32 × 3/4" PH PH SCREW 4 PL
# 10 FLAT WASHER 8 PL
# 10-32 NYLOC NUT 4 PL
1
13
MOUNT WITH
# 10-32 × 3/4" PH PH SCR.
# 10 SPLIT LOCK WASHER
# 10 FLAT WASHER
2 PL
63
1
15 MOUNT WITH
# 10-32 × 3/4" PH PH SCREW
# 10 SPLIT LOCK WASHER
# 10 FLAT WASHER
2 PL
11
56 5 PL
MOUNT TO 25 FILTER/REG ASSY WITH
# 10 FLAT WASHER
# 10 SPLIT LOCK WASHER
# 10-32 HEX NUT
4 PL
28
57 2 PL
5
3
MOUNT ITEM ② TO ITEM ⑰ USING
# 10-32 × 3/4" SOC. HD. CAP SCREW
4 PL 2
17
33
53
PIN AND 'E' RINGS SUPPLIED WITH CLEVIS 650-0014.
VIEW A-A

SOLENOID: 610-0008-C1

NOTES:

1. SEE VIEW B-B FOR MOUNTING HOLES USED
2. APPLY LOCTITE #601 TO MTG. SCREW PRIOR TO INSTALLATION.
3. SEE 00-0087-10, AIRLINE ASSY-CEC DRAWING FOR PROPER CONNECTION OF AIRLINES.

		ITEM	DESCRIPTION/MATERIAL	QTY
-10	00-0227			
-10	00-0117			
10	00-0068			
DASH NO	NEXT ASSY NO			

USED ON

DO NOT SCALE DRAWING

SURFACE FINISH ✓

MATERIAL: SEE L/M

DRAWN BY: L. FORTE DATE: 7/12/82

CHECKED

ENGINEER

Pizza Time Theatre Inc.
1213 Innsbruck Dr.
Sunnyvale, CA 94086

TITLE: CHAR. MECH. FINAL ASSY - CEC / GUEST

SIZE: D DRAWING NO: 00-0046-10 REV: R

SCALE: 1/2 SHEET 1 OF

A2.1-1

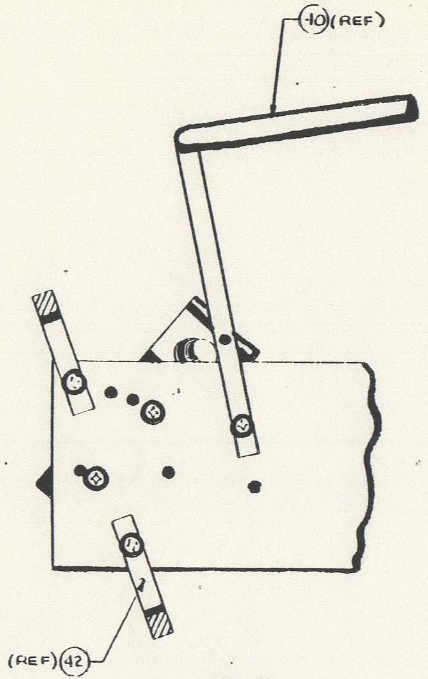

10 (REF)
(REF) 42

VIEW B-B
TYPICAL 2 PL
SCALE: 1/1

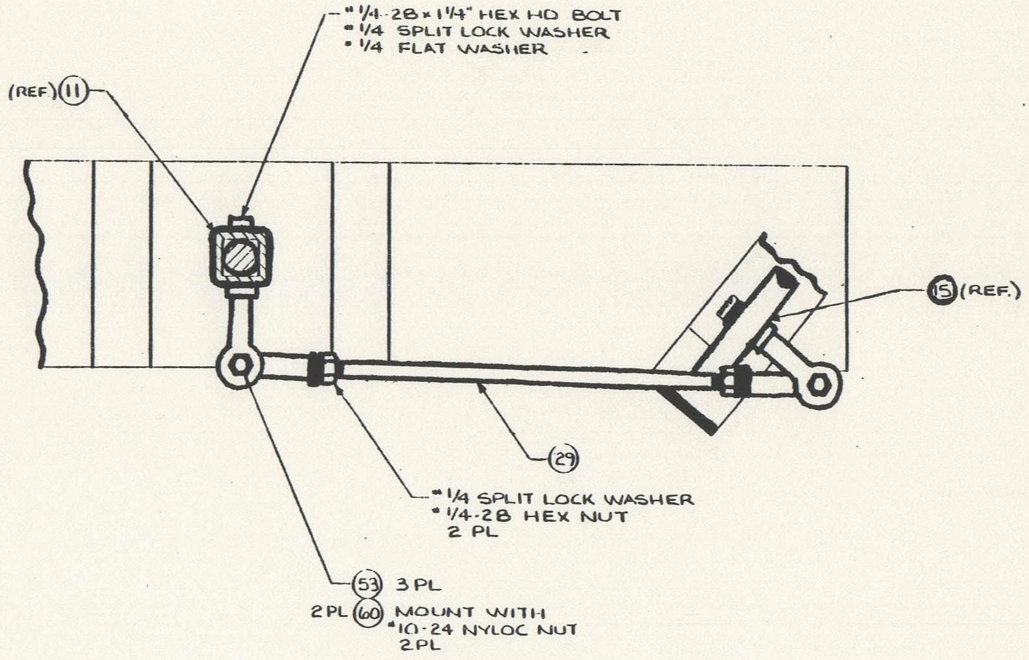

* 1/4-28 x 1 1/4" HEX HD BOLT
* 1/4 SPLIT LOCK WASHER
* 1/4 FLAT WASHER
(REF) 11
15 (REF.)
29
* 1/4 SPLIT LOCK WASHER
* 1/4-28 HEX NUT
2 PL
53 3 PL
2 PL 60 MOUNT WITH
* 10-24 NYLOC NUT
2 PL

VIEW C-C
SCALE: 1/1

ITEM	DESCRIPTION MATERIAL	QTY

NEXT ASST NO
USED ON

DO NOT SCALE DRAWING

Pizza Time Theatre Inc.
1213 Innsbruck Dr.
Sunnyvale, CA 94086

TITLE
CHAR. MECH. FINAL
ASSY - CEC / GUEST

SIZE	DRAWING NO	REV
D	00-0046-10	R

SCALE 1/2
SHEET 2 OF

A2.1-2

LIST OF MATERIALS

	REV
00-0046	R

ITEM	90	80	70	60	50	40	30	20	10	PART NUMBER	REFERENCE	DESCRIPTION	L/M
1		-	-	2	2			-	-	00-0001-20		FLAG WAVER - LEFT	YES
2		-	1	-	-			1	1	00-0044-10		HEAD MECH ASSY - STD	YES
3		1	-	-	-			-	-	00-0044-20		HEAD MECH ASSY - PASQ	YES
4		-	-	1	1			-	-	00-0044-30		HEAD MECH ASSY - DOLLI	YES
5		-	-	-	-			-	1	00-0087-10		AIRLINE ASSY - CEC	YES
6		-	-	-	-			1	-	00-0088-10		AIRLINE ASSY - JASP.	YES
7		-	-	-	1			-	-	00-0091-10		AIRLINE ASSY - DOLLI	YES
8		-	-	1	-			-	-	00-0133-10		AIRLINE ASSY - ARTIE	YES
9		-	1	-	-			-	-	00-0229-10		AIRLINE ASSY - MUNCH	YES
10		1	-	-	-			-	-	00-0228-10		AIRLINE ASSY - PASQ	YES
11		1	1	-	-			1	1	00-0236-10		BASE TORSO ASSY	YES
12		-	-	1	1			-	-	00-0236-20		BASE TORSO ASSY - PED	YES
13		-	1	-	-			-	1	00-0239-10		STAGE RT. ARM - POWER UP	YES
14		1	-	-	-			-	-	00-0238-10		STAGE RT. ARM - FIXED ROT.	YES
15		1	1	-	-			1	1	00-0240-10		STAGE LT. ARM - FIXED ROT.	YES
16		-	-	-	-			1	-	00-0265-10		JASPER BANJO ASSY.	YES
17		-	-	1	1			1	1	00-0268-10		YOKE ASSY - ROTATE & TILT	YES
18		1	1	-	-			-	-	00-0268-20		YOKE ASSY - ROTATE NO TILT	YES
19		-	-	-	1			-	-	00-0269-10		DOLLI BREAST PLATE	YES
20		-	-	1	1			1	-	02-0010-10		HAND ASSY - RIGHT	YES
21		-	-	1	1			1	-	02-0010-20		HAND ASSY - LEFT	YES
22		-	-	1	1			-	-	06-0005-20		SOL. BD. ASSY - DOLLI #1	YES
23		-	-	-	1			-	-	06-0005-30		SOL. BD. ASSY - DOLLI #2	YES

	USED ON		
-10	CEC/GUEST	-60	ARTIE
-20	JASPER	-70	MUNCH
-30		-80	PASQ.
-40		-90	
-50	DOLLI		

REV	A	B	C	D	E	F	G	H	I	J	K	L	M	N	O	P	Q	R
ECO	0378	0387	0449	0452	0491	0517	0555	0592	0616	0719	0732	0765	0793	0868	0988	1006	1034	1038

TITLE

CHAR. MECH
FINAL ASSY

REV

A 00-0046 R

SHT 3 OF 5

A2.1-3

© BISHOP GRAPHICS/ACCUPRESS

LIST OF MATERIALS

	REV
00-0046	R

ITEM	90	80	70	60	50	40	30	20	10	PART NUMBER	REFERENCE	DESCRIPTION	L/M
24		-	-	1	-			-	-	06-0005-11		SOL. BD. ASSY - ARTIE #2	YES
25		-	-	-	-			-	1	06-1005-10		SOL. BD. ASSY-STANDARD	YES
26		1	1	-	-			1	-	06-1005-20		SOL. BD. ASSY - J/P/M	YES
27		-	-	2	2			-	-	01-0002-01		SUPPORT, FLAG POLE	-
28		1	1	1	1			1	1	01-0024-01		HEAD TILT CYL SHAFT	-
29		-	-	-	-			-	1	01-0099-01		EXTENSION ROD	-
30		1	-	-	-			-	-	01-0114-02		BODY TILT INSERT	-
31		-	-	-	-			1	-	01-0172-03		SPACER	-
32		2	1	-	-			1	-	01-0172-04		SPACER	-
33		1	1	1	1			1	1	01-0180-01		HEAD TURN DRIVE	-
34		-	-	4	4			-	-	01-0186-01		FLAG POLE SLEEVE	-
35		-	-	2	2			-	-	01-0232-01		DOLLI HAND UNION BRKT.	-
36		-	-	2	2			-	-	01-0233-01		DOLLI HAND EXTENSION	-
37		-	-	4	4			4	-	01-0288-01		LEATHER STRAIN RELIEF	-
38		2	-	-	-			-	-	01-0289-01		MODIFIED SPH. ROD END	-
39		-	-	-	-			1	-	01-0364-01		FRET BRACKET	-
40		1	1	1	1			1	1	01-0365-01		COSMETIC SUPPORT BAR	-
41		-	-	2	2			2	-	01-0366-01		UP. ARM COSM. SUPT. BRKT.	-
42		2	2	2	2			2	2	01-0465-01		COSMETIC SUPPORT RING	-
43		-	1	-	-			-	-	600-0004-01		AIR CYLINDER	-
44		2	-	-	-			-	-	600-0008-01		AIR CYLINDER	-
45		1	1	-	-			1	-	610-0008-01		VALVE 4 WAY	-
46		1	1	-	-			1	-	630-0001-01		BARB, #10-32 X 1/8" HOSE	-

	USED ON		
-10	CEC/GUEST	-60	ARTIE
-20	JASPER	-70	MUNCH
-30		-80	PASQ.
-40		-90	
-50	DOLLI		

REV

ECO

TITLE

CHAR. MECH.
FINAL ASSY

		REV
A	00-0046	R

SHT 4 OF 5

A2.1-4

BISHOP GRAPHICS/ACCUPRESS
REORDER NO. A 9624

LIST OF MATERIALS

Chuck E. Cheese's

	REV
00-0046	R

ITEM	90	80	70	60	50	40	30	20	10	PART NUMBER	REFERENCE	DESCRIPTION	L/M
47		2	2	–	–			2	–	630-0003-01		AIR MUFFLER	–
48		–	–	–	1			–	–	630-0005-01		AIR TEE 1/8 X 1/8 X 1/8	–
49		3	3	–	–			3	–	630-0008-01		BARB, #10-32 X 1/16" HOSE	–
50		4	2	–	–			–	–	630-0011-01		BARB, 1/8 NPT TO 1/16 HOSE	–
51		4	4	–	–			4	–	630-0033-01		RUBBER WASHER	–
52		–	1	–	–			–	3	680-0026-01		SPHERICAL ROD END	–
53		1	1	1	1			1	1	680-0034-01		BEARING	–
54		–	–	–	–			6'	–	700-0117-01		DEFROST HOSE	–
55		–	–	8'	8'			–	–	750-0007-01		DRYER HOSE, 4" DIA.	–
56		5	5	5	5			5	5	760-0021-01		PANDUIT HARNESS TIE DOWN	–
57		2	2	2	2			2	2	800-0015-01		'E' RING 1/4" SHAFT	–
58		–	–	4	4			–	–	800-0031-01		HOSE CLAMP	–
59		–	–	2	2			–	–	800-0048-01		4" ANGLE BRACKET	–
60		3	2	–	–			2	2	800-0069-01		ALLEN HEX. SOC. HD. SCREW	–
61		–	–	–	15'			–	–	800-0084-01		CRS STRAPPING	–
62		–	–	4	4			–	–	800-0094-01		STAND OFF	–
63		1	1	1	1			1	1	800-0149-01		ROLL PIN	–
64		1	–	–	–			–	–	800-0168-01		ALLEN HEAD BOLT #10-32 X 1 1/2	–

	USED ON		
-10	CEC /GUEST	-60	ARTIE
-20	JASPER	-70	MUNCH
-30		-80	PASQ.
-40		-90	
-50	DOLLI		

REV

ECO

TITLE

CHAR. MECH
FINAL ASSY

		REV
A	00-0046	R

SHT 5 OF 5

A2.1-5

BISHOP GRAPHICS/ACCUPRESS

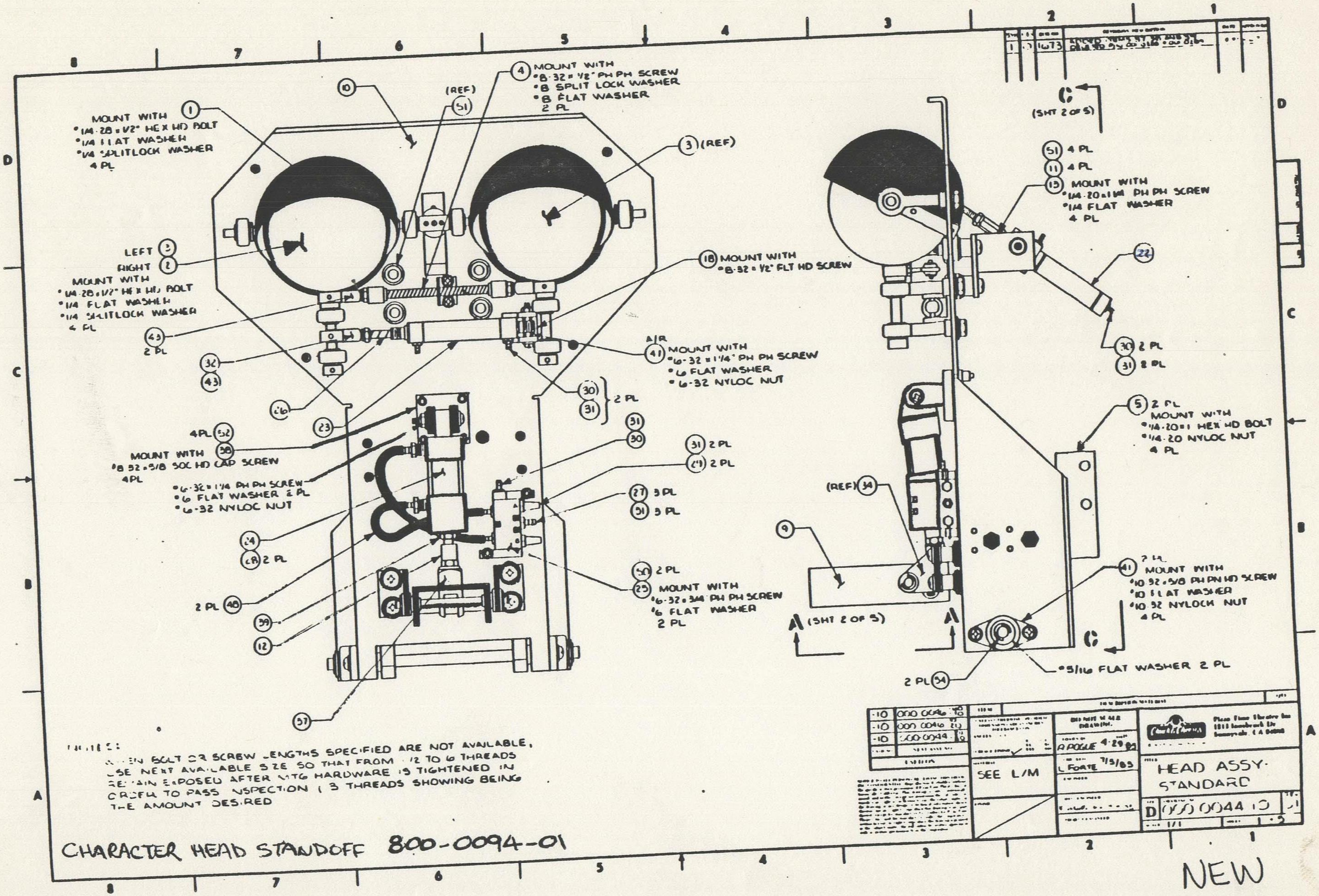
8
7
6
5
4
3
2
1
D
C
B
A
MOUNT WITH
•1/4-28 × 1/2" HEX HD BOLT
•1/4 FLAT WASHER
•1/4 SPLITLOCK WASHER
4 PL
①
⑩
(REF)
(51)
④ MOUNT WITH
•8-32 × 1/2" PH PH SCREW
•8 SPLIT LOCK WASHER
•8 FLAT WASHER
2 PL
③ (REF)
LEFT ③
RIGHT ②
MOUNT WITH
•1/4-28 × 1/2" HEX HD BOLT
•1/4 FLAT WASHER
•1/4 SPLITLOCK WASHER
4 PL
⑱ MOUNT WITH
•8-32 × 1/2" FLT HD SCREW
(43)
2 PL
(32)
(43)
(26)
A/R
(41) MOUNT WITH
•6-32 × 1 1/4" PH PH SCREW
•6 FLAT WASHER
•6-32 NYLOC NUT
(30)
(31)
2 PL
(23)
4 PL (52)
MOUNT WITH (38)
•8-32 × 5/8 SOC HD CAP SCREW
4 PL
(31)
(30)
(31) 2 PL
(29) 2 PL
•6-32 × 1/4 PH PH SCREW
•6 FLAT WASHER 2 PL
•6-32 NYLOC NUT
(27) 3 PL
(31) 3 PL
(24)
(28) 2 PL
(50) 2 PL
(25) MOUNT WITH
•6-32 × 3/4 PH PH SCREW
•6 FLAT WASHER
2 PL
2 PL (40)
(39)
⑫
(57)
C
(SHT 2 OF 5)
(51) 4 PL
⑪ 4 PL
⑬ MOUNT WITH
•1/4-20 × 1/4 PH PH SCREW
•1/4 FLAT WASHER
4 PL
(22)
(30) 2 PL
(31) 2 PL
⑤ 2 PL
MOUNT WITH
•1/4-20 × 1 HEX HD BOLT
•1/4-20 NYLOC NUT
4 PL
(REF) (34)
⑨
(41) 2 PL
MOUNT WITH
•10-32 × 3/8 PH PN HD SCREW
•10 FLAT WASHER
•10-32 NYLOCK NUT
4 PL
A (SHT 2 OF 5)
A
C
2 PL (34)
•5/16 FLAT WASHER 2 PL
1 | 1673

NOTES:
WHEN BOLT OR SCREW LENGTHS SPECIFIED ARE NOT AVAILABLE, USE NEXT AVAILABLE SIZE SO THAT FROM 2 TO 6 THREADS REMAIN EXPOSED AFTER MTG HARDWARE IS TIGHTENED IN ORDER TO PASS INSPECTION (3 THREADS SHOWING BEING THE AMOUNT DESIRED

-10	000 0046 -10
-10	000 0046 -20
-10	000 0044 -10

SEE L/M

A POGUE 4-29-83

L FORTE 7/5/83

HEAD ASSY-
STANDARD

D 000 0044 10

1/1

CHARACTER HEAD STANDOFF 800-0094-01

NEW

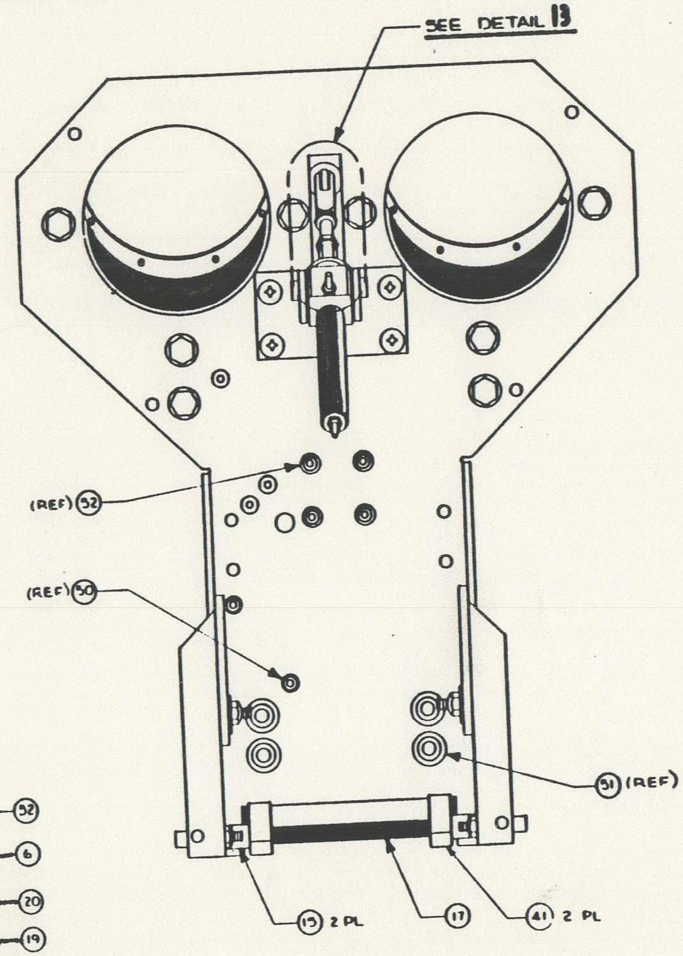
SEE DETAIL B
(REF) 52
(REF) 50
51 (REF)
15 2 PL
17
41 2 PL

VIEW C-C

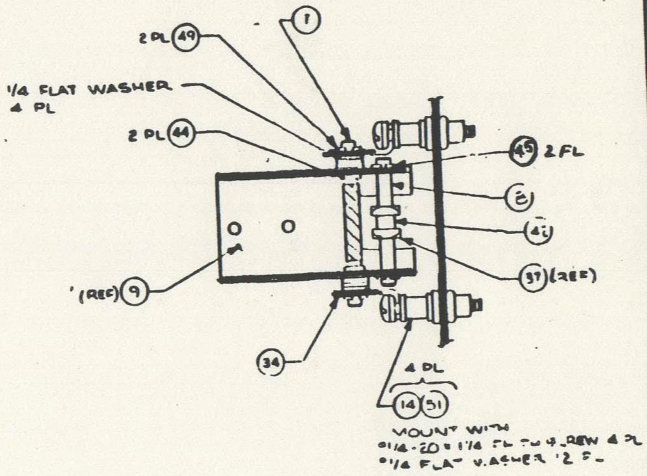
2 PL 49
1
1/4 FLAT WASHER
4 PL
2 PL 44
45 2 FL
8
43
37 (REF)
(REF) 9
34
4 PL
14 51
MOUNT WITH
#1/4-20 × 1 1/4 FL [illegible] SCREW 4 PL
#1/4 FLAT WASHER 12 PL

VIEW A-A

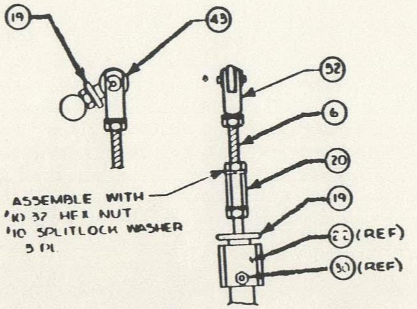
19
43
52
6
20
19
22 (REF)
30 (REF)
ASSEMBLE WITH
#10 32 HEX NUT
#10 SPLITLOCK WASHER
5 PL

DETAIL B

D.POGUE 4 21 84

L FORTE 5/83

HEAD ASSY
STANARD

D 000-0044-10

1/1

LIST OF MATERIALS

ITEM	90	80	70	60	50	40	30	20	10	PART NUMBER	REFERENCE	DESCRIPTION	U/M
1									1	000-0042-10		EYELID ASSY	YES
2									1	000-0043-10		RT EYEBALL ASSY	YES
3									1	000-0043-20		LT EYEBALL ASSY	YES
4									1	000-0045-10		EYEBALL CENTERING	YES
5									2	001-0023-01		CLEVIS SHFT BRKT	~
6									1	001-0031-01		EYELID CYL TIE ROD	~
7									1	001-0052-01		JAW PIVOT PIN	~
8									1	001-0055-01		JAW CLEVIS PIN	~
9									1	001-0061-01		JAW HINGE	–
10									1	001-0065-01		HEAD PLATE	~
11									4	001-0114-03		BODY TILT INSERT	–
12									1	001-0186-02		VINYL TUBING	~
13									1	001-0208-01		TRUNION PVT BRKT	~
14									4	001-0212-01		JAW SPACER	~
15									2	001-0214-01		MOUTH CYL SPACER	–
16													
17									1	001-0217-01		SHAFT MTG PLATE	~
18									1	001-0263-01		EYETURN CYL BRKT	–
19									2	001-0321-01		LEATHER WASHER	~
20									1	158-0019-01		STANDOFF	~
21													
22									1	160-0010-01		CYLINDER	–
23									1	160-0016-01		CYLINDER	~

	[illegible]		
		60	
10	00-0044 00-0046	70	
20		80	
30		90	
40			
50			

REV 01

100 1673

TITLE
HEAD ASSY -
STANDARD

000 0044-10 01

3 OF 5

LIST OF MATERIALS

ITEM	90	80	70	60	50	40	30	20	10	PART NUMBER	REFERENCE	DESCRIPTION	LM
24									1	600002001		CYLINDER, MOUTH	~
25									1	610000801		4 WAY VALVE	~
26									1	620000501		SPRING COMPRESSION	~
27									3	630000101		NIPPLE #10-32 TO 1/8"	~
28									2	630000201		NIPPLE 1/8NPT TO 1/8"	~
29									2	630000301		AIR MUFFLER	~
30									5	630000801		NIPPLE #10-32 TO 1/8"	~
31									8	630003301		RUBBER WASHER	~
32									2	650000401		CLEVIS ROD W/PIN	~
33													
34									1	650000601		PIVOT BRKT PAIR	~
35													
36													
37									1	650002701		CLY CLEVIS, MOUTH	~
38									1	650002801		CYL PIVOT, MOUTH	~
39									1	650003801		MOUNTING NUT	~
40													
41									2	680000501		BRG PILLOW FLANGE	~
42									1	680000801		CYLINDRICAL BRG 1/4"	~
43									4	680000901		CYLINDRICAL BRG 3/16"	~
44									2	680001401		BEARING FLANGE	~
45									2	680001601		BRG PILLOW BLOCK	~
46									2	680002001		BRG NYLINER	~
47													
48									A/R	740000101		TUBING	~
49									4	800001501		E RING, 1/4" SHAFT	~
50									2	800002901		WELL NUT, #6-32	~
51									8	800003001		WELL NUT, #1/4-20	~

LIST OF MATERIALS

ITEM	90	80	70	60	50	40	30	20	10	PART NUMBER	REFERENCE	DESCRIPTION	L/M
52									4	800-0033-01		WELL NUT, #8-32	–
53									2	800-0069-01		ALLEN SHDR SCREW	–
54									2	800-0111-01		E RING, 5/16" SHAFT	–
*									4	800-0094-01		CHARACTER HEAD STAND-OFF	

TITLE HEAD ASSY STANDARD
ASSY NO. 000-0044-10 REV 01 SHT 5 OF 5

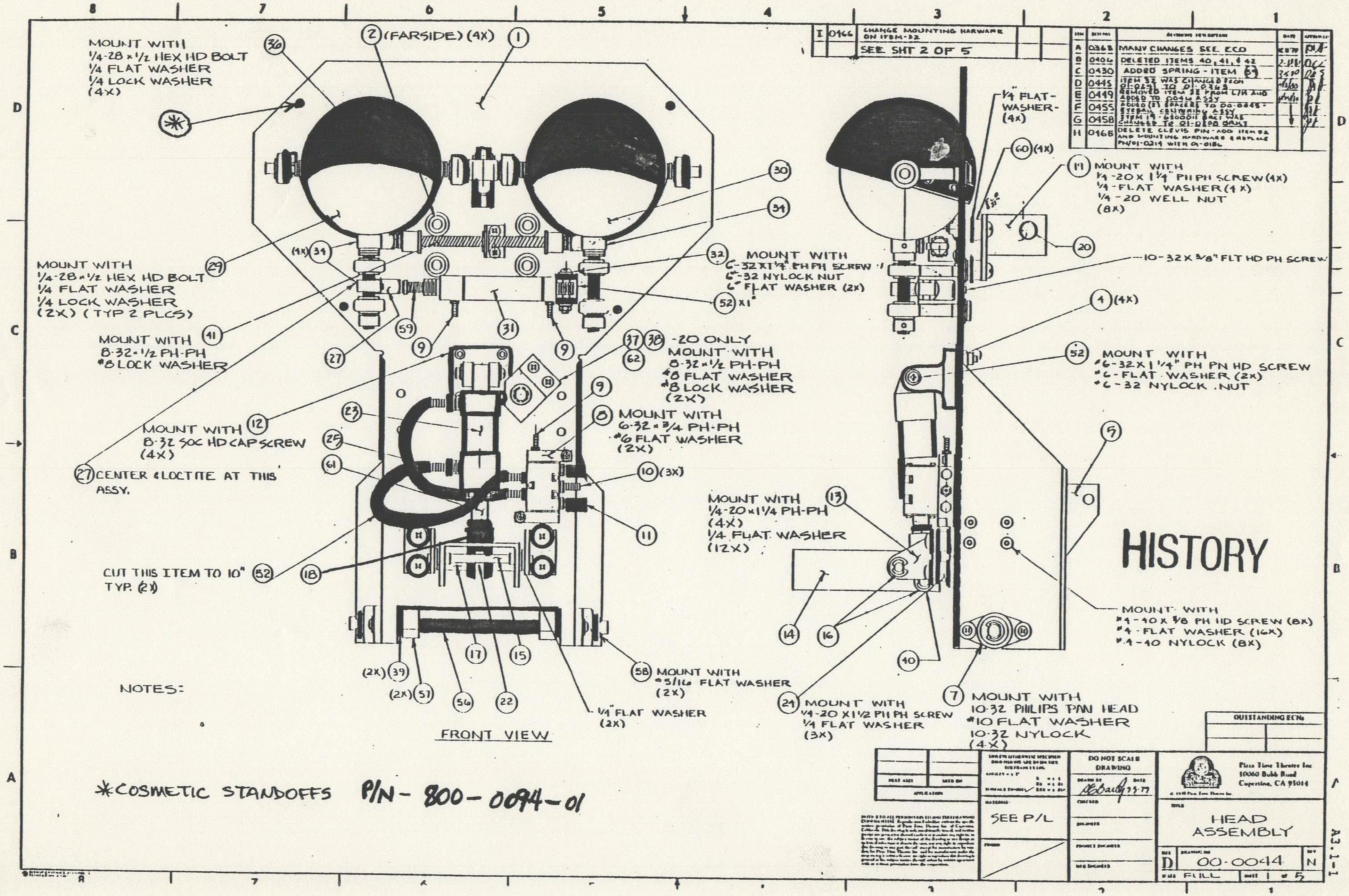
8
7
6
5
4
3
2
1
D
C
B
A
MOUNT WITH
1/4-28 × 1/2 HEX HD BOLT
1/4 FLAT WASHER
1/4 LOCK WASHER
(4X)
✳
36
2 (FARSIDE) (4X)
1
1/4" FLAT-WASHER-(4X)
60 (4X)
11 MOUNT WITH
1/4-20 X 1 1/4" PH PH SCREW (4X)
1/4-FLAT WASHER (4X)
1/4-20 WELL NUT
(8X)
30
34
20
10-32 X 3/8" FLT HD PH SCREW
(4X) 34
MOUNT WITH
1/4-28 × 1/2 HEX HD BOLT
1/4 FLAT WASHER
1/4 LOCK WASHER
(2X) (TYP 2 PLCS)
29
32 MOUNT WITH
6-32 X 1 1/4" PH PH SCREW
6"-32 NYLOCK NUT
6" FLAT WASHER (2X)
52 X1"
4 (4X)
MOUNT WITH
8-32 × 1/2 PH-PH
#8 LOCK WASHER
41
59
9
31
9
27
37 38 -20 ONLY
62
MOUNT WITH
8-32 × 1/2 PH-PH
#8 FLAT WASHER
#8 LOCK WASHER
(2X)
52 MOUNT WITH
#6-32 X 1 1/4" PH PN HD SCREW
#6-FLAT WASHER (2X)
#6-32 NYLOCK NUT
9
8 MOUNT WITH
6-32 × 3/4 PH-PH
#6 FLAT WASHER
(2X)
12
MOUNT WITH
8-32 SOC HD CAP SCREW
(4X)
23
25
5
27 CENTER & LOCTITE AT THIS ASSY.
61
10 (3X)
11
MOUNT WITH
1/4-20 × 1 1/4 PH-PH
(4X)
1/4 FLAT WASHER
(12X)
13
CUT THIS ITEM TO 10"
TYP. (2X)
52
18
MOUNT WITH
#4-40 X 3/8 PH HD SCREW (8X)
#4-FLAT WASHER (16X)
#4-40 NYLOCK (8X)
14
16
40
(2X) 39
(2X) 57
56
22
17
15
58 MOUNT WITH
#5/16 FLAT WASHER
(2X)
1/4" FLAT WASHER
(2X)
24 MOUNT WITH
1/4-20 X 1 1/2 PH PH SCREW
1/4 FLAT WASHER
(3X)
7 MOUNT WITH
10-32 PHILIPS PAN HEAD
#10 FLAT WASHER
10-32 NYLOCK
(4X)
FRONT VIEW

I	0466	CHANGE MOUNTING HARWARE ON ITEM-32		
		SEE SHT 2 OF 5		

A	0368	MANY CHANGES SEE ECO		
B	0406	DELETED ITEMS 40, 41, & 42	2-11-80	
C	0430	ADDED SPRING - ITEM (59)	3-5-80	
D	0445	ITEM 32 WAS CHANGED FROM 01-0241 TO 01-0363	4/15/80	
E	0449	REMOVED ITEM 38 FROM L/H AND ADDED TO 0046 ASSY	4/16/80	
F	0455	ADDED (8) SPACERS TO 00-0045-EYEBALL CENTERING ASSY		
G	0458	ITEM 19 - 680001 BRKT WAS CHANGED TO 01-0208 BRKT		
H	0465	DELETE CLEVIS PIN - ADD ITEM 52 AND MOUNTING HARDWARE & REPLACE PN/01-0214 WITH 01-0186		

HISTORY

NOTES:

✳COSMETIC STANDOFFS P/N- 800-0094-01

OUTSTANDING ECNs

DO NOT SCALE DRAWING

DRAWN BY DEBailey DATE 7-9-79

MATERIAL: SEE P/L

Pizza Time Theatre Inc
10060 Bubb Road
Cupertino, CA 95014

TITLE HEAD ASSEMBLY

SIZE D DRAWING NO 00-0044 REV N

SCALE FULL SHEET 1 of 5

A3.1-1

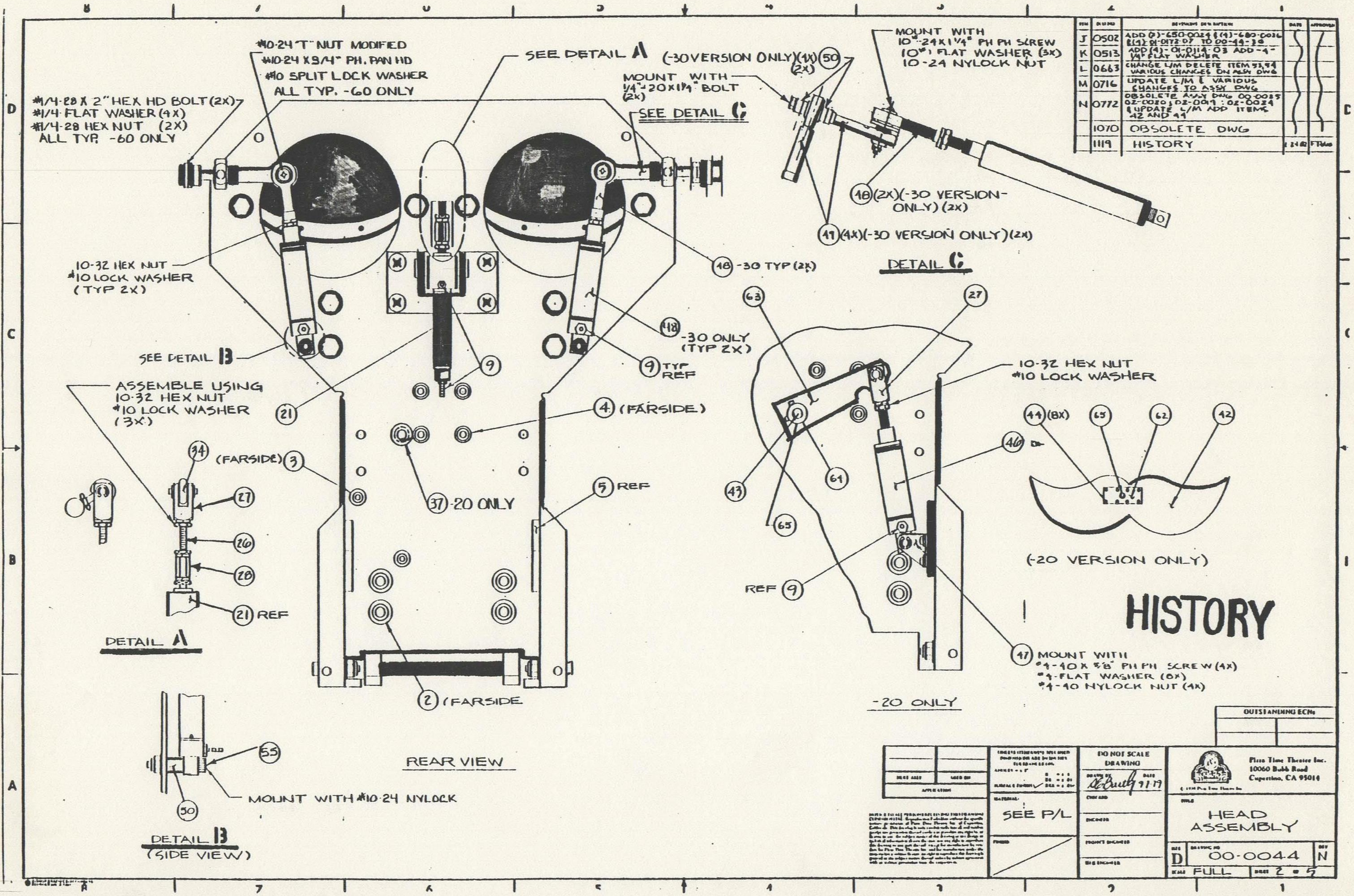
#10-24 "T" NUT MODIFIED
#10-24 X 3/4" PH. PAN HD
#10 SPLIT LOCK WASHER
ALL TYP. -60 ONLY
SEE DETAIL A
#1/4-28 X 2" HEX HD BOLT (2X)
#1/4 FLAT WASHER (4X)
#1/4-28 HEX NUT (2X)
ALL TYP. -60 ONLY
SEE DETAIL C
10-32 HEX NUT
#10 LOCK WASHER
(TYP 2X)
48 -30 TYP (2X)
48 -30 ONLY (TYP 2X)
SEE DETAIL B
9
9 TYP REF
21
4 (FARSIDE)
ASSEMBLE USING
10-32 HEX NUT
#10 LOCK WASHER
(3X)
34
(FARSIDE) 3
27
26
28
21 REF
37 -20 ONLY
5 REF
2 (FARSIDE
DETAIL A
55
50
MOUNT WITH #10-24 NYLOCK
DETAIL B
(SIDE VIEW)
REAR VIEW
(-30 VERSION ONLY)(4X) 50 (2X)
MOUNT WITH
1/4"-20 X 1 1/4" BOLT
(2X)
MOUNT WITH
10"-24 X 1 1/4" PH PH SCREW
10" FLAT WASHER (3X)
10-24 NYLOCK NUT
48 (2X)(-30 VERSION-ONLY) (2X)
47 (4X)(-30 VERSION ONLY)(2X)
DETAIL C
63
27
10-32 HEX NUT
#10 LOCK WASHER
46
61
43
65
REF 9
44 (8X)
65
62
42
(-20 VERSION ONLY)
HISTORY
47 MOUNT WITH
#4-40 X 5/8" PH PH SCREW (4X)
#4-FLAT WASHER (8X)
#4-40 NYLOCK NUT (4X)
-20 ONLY
D
C
B
A
8
7
6
5
4
3
2
1

J	0502	ADD (2)-650-0024 & (4)-680-0036 & (4) 01-0172-07 TO 00-44-30		
K	0513	ADD (4)-01-0114-03 ADD -4- 1/4" FLAT WASHER		
L	0663	CHANGE L/M DELETE ITEM 53,54 VARIOUS CHANGES ON ASSY DWG		
M	0716	UPDATE L/M & VARIOUS CHANGES TO ASSY DWG		
N	0772	OBSOLETE ASSY DWG 00-0025 02-0020, 02-0019 : 02-0024 & UPDATE L/M ADD ITEMS 42 AND 44		
	1070	OBSOLETE DWG		
	1119	HISTORY	1-24-82	FTH

OUTSTANDING ECNs

APPLICATION

MATERIAL: SEE P/L

DO NOT SCALE DRAWING

DRAWN BY SeBuetz DATE 9-7-79

CHECKED

ENGINEER

PROJECT ENGINEER

MFG ENGINEER

Pizza Time Theatre Inc.
10060 Bubb Road
Cupertino, CA 95014

TITLE HEAD ASSEMBLY

SIZE D

DRAWING NO 00-0044

REV N

SCALE FULL

SHEET 2 of 5

LIST OF MATERIALS

PIZZA TIME THEATRE

REV

00-0044

ITEM	90	80	70	60	50	40	30	20	10	PART NUMBER	REFERENCE	DESCRIPTION	L/M
1							1	1	1	01-0065-		Head Mech Plate	—
2							8	8	8	800-0030-		Well Nut 1/4-20	—
3							2	2	2	800-0029-		Well Nut 6-32	—
4							4	4	4	800-0033-		Well Nut 8-32	—
5							2	2	2	01-0023-		Head Tilt Clevis Shaft Brkt	—
6										- -			
7							2	2	2	680-0005-		Bearing	—
8							1	1	1	610-0008-		4 Way Valve	—
9							7	6	5	630-0008-		Barb, 10-32x1/16"	—
10							3	3	3	630-0001-		Barb, 10-32x1/8"	—
11							2	2	2	630-0003-		Air Muffler	—
12										- -			
13							1	1	1	650-0006-		Bracket, Mouth Pivot	—
14							1	1	1	01-0061-		Jaw Hindge	—
15							1	1	1	01-0052-		Jaw Pivot Pin	—
16							4	4	4	800-0015-		E Ring - 1/4 shaft	—
17							1	1	1	01-0055-		Jaw Clevis Shaft	—
18							1	1	1	01-0228-		Mouth Cylinder Clevis	—
19							1	1	1	01-0208-		Eyelid Trunnion Pivot Brkt	—
20							2	2	2	680-0020-		Bearing, Nylon	—
21							1	1	1	600-0010-		Air Cylinder #BFT-011-D (eyelid)	—
22							1	1	1	680-0008-		Bearing, .253 ID x .3155 OD x 1/2"	—
23							1	1	1	600-0020-		Air Cylinder	—

HISTORY

	USED ON		
-10	CEC, STD	-60	
-20	Pasq	-70	
-30	Dolli - Artie	-80	
-40		-90	
-50			

REV	A	B	C	D	E	F	G	I	–	J	K	L	M	N	History	History
ECO	0368	0406	0430	0445	0449	0455	0458	0465	0466	0502	0513	0663	0716	0772	1070	1119

TITLE

Head Assembly

REV

A 00-0044-

SHT 3 OF 5

A3.1-3

LIST OF MATERIALS

CHUCK E. CHEESE'S PIZZA TIME THEATRE

REV 00-00-

ITEM	90	80	70	60	50	40	30	20	10	PART NUMBER	REFERENCE	DESCRIPTION	L/M
24							4	4	4	01-0212-01		Spacer	—
25							2	2	2	630-0002-		Barb 1/8 NPT to 1/8 ID	—
26							1	1	1	01-0031-		Eyelid Cylinder Tie Rod	—
27							2	3	2	650-0004-		Clevis w/rod, Erings, and 10-24 nut	—
28							1	1	1	580-0019-		Standoff, 10-24x1/2"	—
29							1	1	1	00-0043-10	HISTORY	Eyeball Assy - Stage Right	Yes
30							1	1	1	00-0043-20		Eyeball Assy - Stage Left	Yes
31							1	1	1	600-0016-		Air Cylinder, Bimba #021-DXP	—
32							1	1	1	01-0263-		Eye Turn Cylinder Brkt	—
33							1	1	1	00-0045-		Eye Ball Centering Assy	Yes
34							4	5	4	680-0009-		Bearing	—
35										- -			
36							1	1	1	00-0042-		Eyelid Assy	Yes
37							-	2	-	680-0001-		Bearing	—
38							-	1	-	01-0215-		Standoff, Mustache	—
39							2	2	2	01-0214-		Spacer	—
40							2	2	2	680-0014-		Bearing	—
41							1	1	1	01-0229-		Mouth Cylinder Pivot Mount	—
42							-	1	-	01-0230-		PASQ MUSTACHE	—
43							-	1	-	01-0133-		Mustache Rod	—
44							-	8	-	800-0012-		POP RIVET 1/8 DIA. X 1/8 GR	-
45										- -			
46							-	1	-	600-0002-		Cylinder, Mustache	—

USED ON			
-10		-60	
-20		-70	
-30		-80	
-40		-90	
-50			

ECO REV

TITLE

Head Assembly

REV

A 00-0044-

SHT 4 OF 5

BISHOP GRAPHICS/ACCUPRESS
REORDER NO. A-9624

LIST OF MATERIALS

CHUCK E. CHEESE'S
PIZZA TIME THEATRE

REV

00-OC44

ITEM	90	80	70	60	50	40	30	20	10	PART NUMBER	REFERENCE	DESCRIPTION	L/M
47							-	1	-	650-0005		Pivot Bracket	—
48							2	-	-	650-0024		Spherical Rod End	—
49							2	-	-	680-0026		Spherical Rod End	—
50							4	-	-	01-0172-07		Nylon Spacer	—
51							2	-	-	650-0023		SPHERICAL ROD END	—
52							20"	20"	20"	740-0001		1/4" tubing	—
53							-	2	-	800-0069		SOC. HD. SCREW #10-32x3/4"	—
54													
55													
56							1	1	1	01-0217		Shaft, Head Plate Mount	—
57							2	2	2	680-0016		Bearing, Pillow Block	—
58							2	2	2	800-0111		'E' Ring, 3/16" shaft	—
59							1	1	1	620-0005		Spring 1/4" I.D. - 1/2" LG.	—
60							4	4	4	01-0114-03		Spacer	—
61							1	1	1	01-0186-02		Spacer	—
62							-	1	-	01-0151		Mustache Mt Bracket	—
63							-	1	-	01-0147		Mustache Linkage	—
64							-	1	-	680-0009		Bearing	—
65							-	2	-	01-0148		Mustache Linkage Collar	—
66								9	8	630-0033-01		WASHER, RUBBER #10-32	—

HISTORY

USED ON			
-10		-60	
-20		-70	
-30		-80	
-40		-90	
-50			

ECO REV

TITLE

Head Assy.

REV

A 00-0044-N

SHT 5 OF 5

A3.1-5

BISHOP GRAPHICS/ACCUPRESS
REORDER NO. A-9624

IRis:

CEC	—	0020022	-10
MUNCH—	"	"	-20
PASQUALLY	"	"	-30
JASPER	"	"	-30
KiNG	"	"	-50
GUEST	"	"	-50

LTR	ECN	REVISION DESCRIPTION	DATE	APPROVED
A	0462	REMOVED 01-0056 FROM L/M AND REPLACED WITH 02-0289. ADDED ITEM 6	6/6/80	
B	0576	ITEM 1 - EYELID SUB ASSY - OBSOLETE ITEM 1 IS EYELID 01-0057	9/12/80	
C	0708	ADD ITEM 7 LEATHER WASHER	1/7/81	RH
D	1007	ADDED ITEM 4		
	1131	OBSOLETE 00-0042-10		

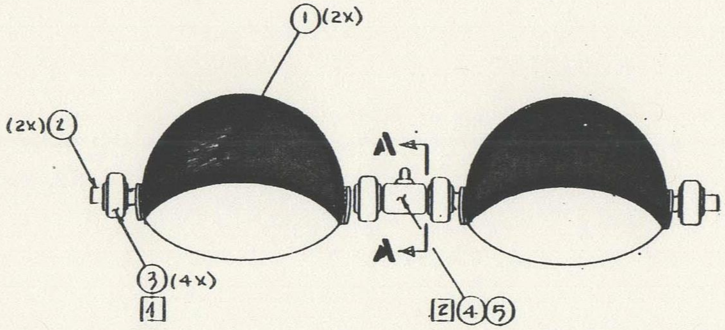

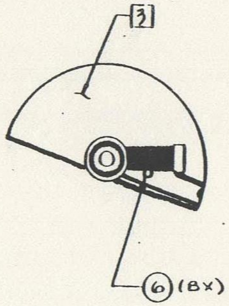

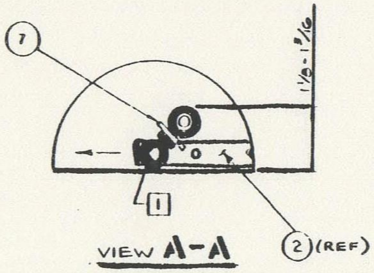

VIEW A-A

HISTORY

NOTES:

1. NOTE ORIENTATION OF FLATS.
2. USE LOCKTITE ON SET SCREWS DURING CHARACTER FINAL ASSY
3. EYELIDS MUST BE PAINTED AND MATCHED TO CHARACTER BEFORE ASSY.
4. CUT (ITEM 3) P/N 800 0023 TO 1 31" LONG 4 PLACES

OUTSTANDING ECNs

03-0044			
NEXT ASSY	USED ON		
APPLICATION			
MATERIAL: SEE P/L	DO NOT SCALE DRAWING		
FINISH	DRAWN BY	DATE	9 10 77
	CHECKED		1-28-77
	ENGINEER		
	PRODUCT ENGINEER		
	MFG ENGINEER		

Pizza Time Theatre Inc.
10060 Bubb Road
Cupertino, CA 95014

TITLE EYELID ASSY

SIZE	DRAWING NO	REV
D	00-0042	C
SCALE FULL	SHEET 1 of 2	

A3.2-1

LIST OF MATERIALS

CHUCK E. CHEESE'S PIZZA TIME THEATRE

00-0042	REV D

ITEM	90	80	70	60	50	40	30	20	10	PART NUMBER	REFERENCE	DESCRIPTION	L/M
1									2	01-0057-01		EYELID	—
2									2	02-0289-01		SUPPORT RING-SHAFT WLDMNT	—
3									4	680-0026-01		BEARING, SPHERICAL ROD	—
4									1	01-0043-01		EYELID CRANK COLLAR	—
5									1	800-0023-01		EYEBOLT #10-24	—
6									8	880-0052-01		POP RIVET 1/8 DIA × 1/16 GR	—
7									1	01-0321-01		LEATHER WASHER	—

HISTORY

	USED ON		
-10	00-0044	-70	
-20		-80	
-30		-90	
-40			

REV	ECO
A	0462
B	0576
C	0708
D	1007
HISTORY	1131

TITLE

EYELID ASSY

		REV	
A	00-0042	D	SHT 2 OF 2

B	0519	DELETED 02-002 ASSY & INCORP PARTS INTO THIS ASSY (ITEMS 7, 8 & 9)	[illegible]	[illegible]
C	0706	ADD ITEM 10 LEATHER WASHER	[illegible]	[illegible]
D	1007	ADDED NOTE #5		
	1129	OBSOLETE 00-0043-10 & OBSOLETE 00-0043-20		

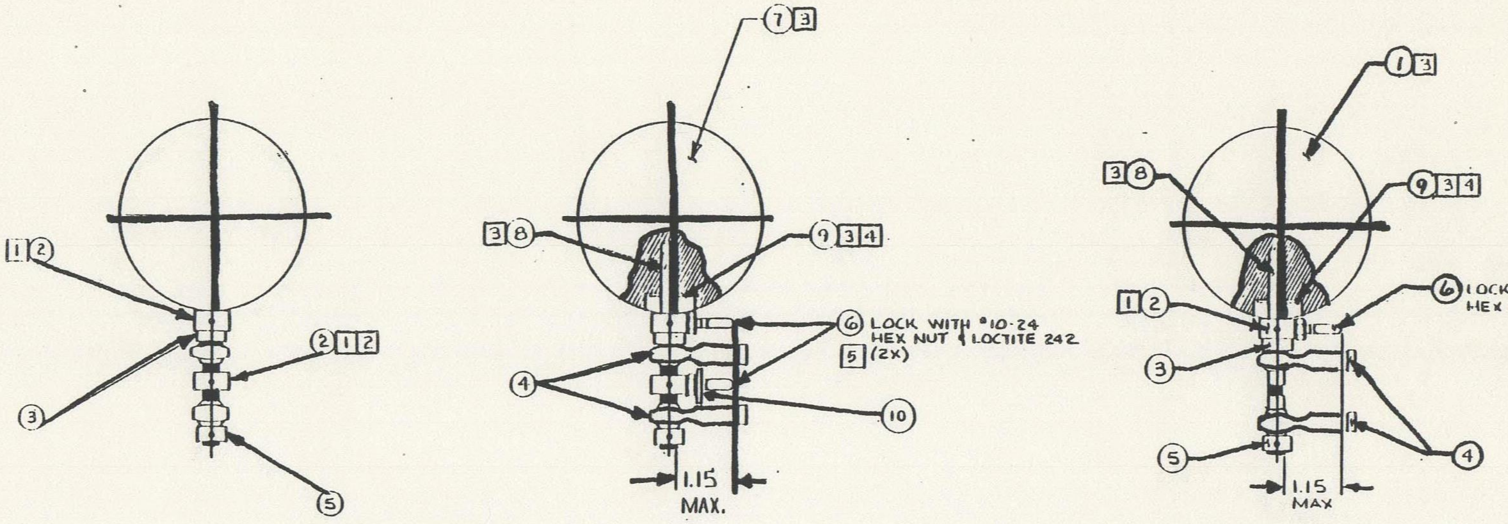

-10 VERSION (STAGE RIGHT)

-20 VERSION (STAGE LEFT)

NOTES:

1. ALIGN SET SCREW IN DRIVE COLLAR (ITEM 2) WITH FLATS ON PIVOT SHAFT (ITEM 8). USE LOCTITE ON SET SCREWS.
2. CENTER BETWEEN ROD ENDS AFTER MOUNTING TO HEAD MECH PLATE (ASSY NO. 00-0044).
3. EPOXY SHAFT (ITEM 8) TO EYEBALL (ITEM 7) WITH SPRING PIN (ITEM 9) FLUSH TO BOTTOM OF MILLED SLOT AS SHOWN.
4. BACK FILL SLOT TO ENCAPSULATE SPRING PIN (ITEM 9), FILL SLOT COMPLETELY.
5. CUT (ITEM 6) P/N 800-0023 TO 1.31" 2 PLACES

HISTORY

OUTSTANDING ECNs

00-0044

DO NOT SCALE DRAWING

DRAWN BY 7/11/79 DATE
Bradley E Root

CHECKED 7/23/79

Pizza Time Theatre Inc.
10060 Bubb Road
Cupertino, CA 95014

TITLE
EYEBALL ASSEMBLY

SIZE D
DRAWING NO 00-0043
REV C

SCALE FULL
SHEET 1 of 2

A3.3-1

LIST OF MATERIALS

CHUCK E. CHEESE'S PIZZA TIME THEATRE

REV: 00-0043 D

ITEM	90	80	70	60	50	40	30	20	10	PART NUMBER	REFERENCE	DESCRIPTION	U/M
1													
2								1	2	01-0044-01	OBSOLETE	EYEBALL CRANK COLLAR	—
3								1	1	01-0114-03		SPACER 3/16" THK x 1/4" ID	—
4								2	2	680-0026-01		SPHERICAL ROD END-BEARING	
5								1	1	650-0008-01	OBSOLETE	COLLAR-SET SCREW	—
6								1	2	800-0023-01		EYEBOLT #10-24	—
7								1	1	01-0117-01		EYEBALL	—
8								1	1	01-0058-01	OBSOLETE	EYEBALL PIVOT SHAFT	—
9								1	1	800-0073-01	OBSOLETE	SPRING PIN .062	—
10								—	1	01-0321-01	OBSOLETE	LEATHER WASHER	-

HISTORY

	USED ON		
-10	00-0044	-60	
-20	00-0044	-70	
-30		-80	
-40		-90	
-50			

REV	B	C	D	HISTORY
ECO	0579	0708	1007	1129

TITLE

EYEBALL ASSY

		REV
A	00-0043	D

SHT 2 OF 2

A3.3-2

BISHOP GRAPHICS/ACCUPRESS
REORDER NO. A 9624

SYM	ECO NO	REVISIONS DESCRIPTION	DATE	APPROVED
A	0398	REPLACED STEEL WASHER WITH NYLON WASHER #B000025	[illegible]	[illegible]
B	0455	ADDED ITEM 7 - SPACER (2X)	11/3/80	[illegible]
		OBSOLETE 00-0045-10		

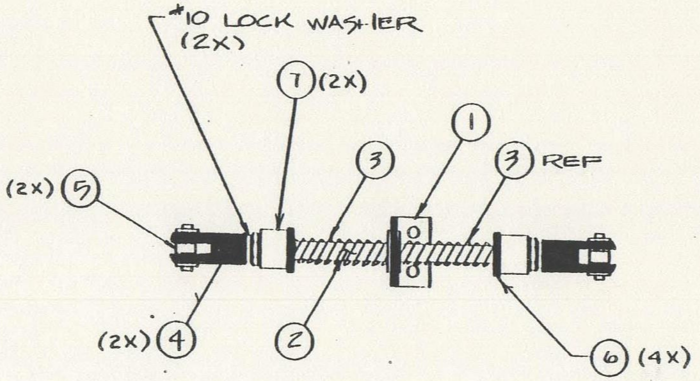

HISTORY

OUTSTANDING ECNs	

00-0044	
NEXT ASSY	USED ON
APPLICATION	

UNLESS OTHERWISE SPECIFIED DIMENSIONS ARE IN INCHES TOLERANCES ON:
ANGLES ± 1°
X ± .1
XX ± .01
XXX ± .010
SURFACE FINISH ✓

MATERIAL
SEE P/L

FINISH

DO NOT SCALE DRAWING

DRAWN BY: McBayth DATE: 7-28-79
CHECKED: 9/28/79
ENGINEER
PROJECT ENGINEER
MFG ENGINEER

Pizza Time Theatre Inc.
10060 Bubb Road
Cupertino, CA 95014

© 1979 Pizza Time Theatre Inc.

TITLE
EYEBALL CENTERING ASSEMBLY

SIZE: C
DRAWING NO: 00-0045
REV: B
SCALE: FULL
SHEET 1 OF 2

A3.4-1

NOTICE TO ALL PERSONS RECEIVING THIS DRAWING: CONFIDENTIAL. [illegible]

LIST OF MATERIALS

CHUCK E. CHEESE'S PIZZA TIME THEATRE

		REV
00-0045		B

ITEM	90	80	70	60	50	40	30	20	10	PART NUMBER	REFERENCE	DESCRIPTION	L/M
1									1	01-0042-	OBSOLETE	CENTERING BRACKET	—
2									1	01-0029-01	OBSOLETE	EYEBALL TANDEM TIE ROD	—
3									2	620-0004-	OBSOLETE	SPRING	—
4									2	650-0004-		CLEVIS WITH PIN	—
5									2	680-0009-		BEARING 3/16 ID x 5/16 OD x 3/16	—
6									4	800-0025-		WASHER #10 NYLON	—
7									2	01-0114-02		INSERT 1/4 ID x 3/8 LG.	—

HISTORY

	USED ON		
-10	00-0044	-60	
-20		-70	
-30		-80	
-40		-90	
-50			

REV	ECO
A	0398
B	0455
HISTORY	1130

TITLE

EYEBALL CENTERING ASSY

		REV
A	00-0045	B

SHT 2 OF 2

A3.4-2

BISHOP GRAPHICS/ACCUPRESS
REORDER NO. A-9624

A4. Character
Shoulder/Arms

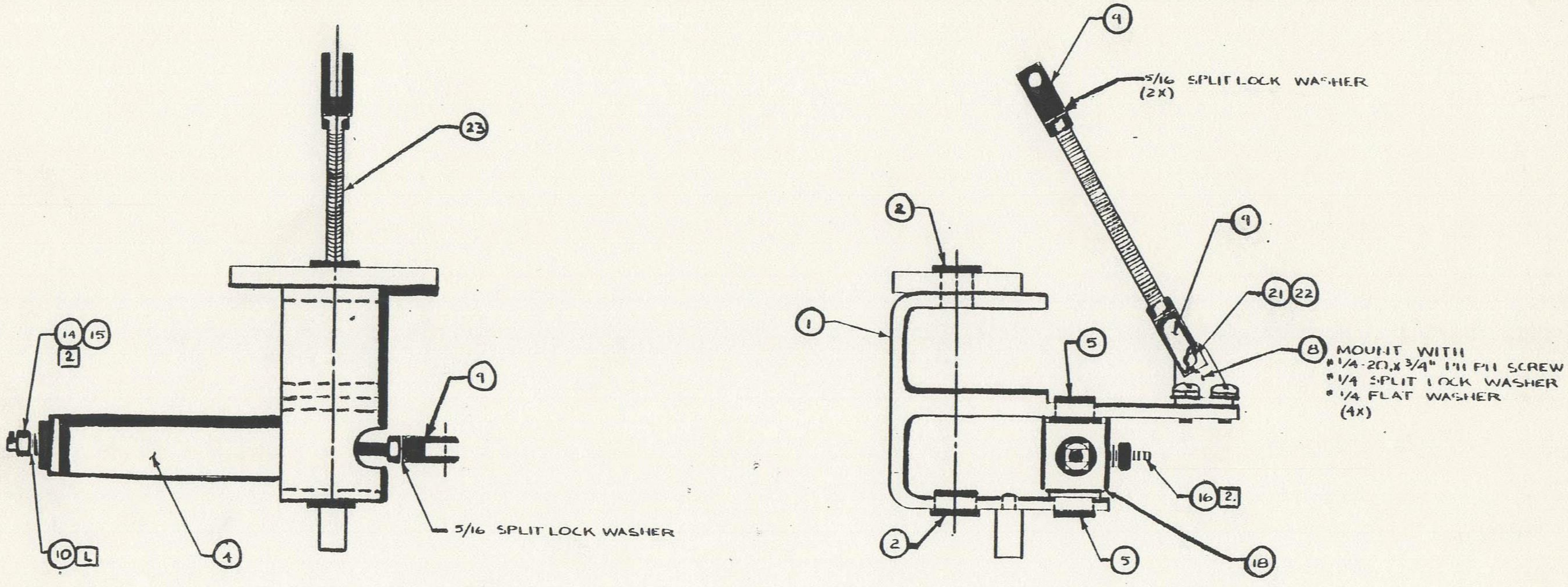
23
14 15
2
9
5/16 SPLIT LOCK WASHER
10 L
4
9
5/16 SPLIT LOCK WASHER (2X)
2
9
1
21 22
5
8
MOUNT WITH
#1/4-20 x 3/4" PH PH SCREW
#1/4 SPLIT LOCK WASHER
#1/4 FLAT WASHER
(4X)
16 2
2
5
18

-20 VERSION
(ROTATE - NO TILT)

OUTSTANDING ECNs

NEXT ASSY | USED ON
APPLICATION

DO NOT SCALE DRAWING

DRAWN BY D. ADAMS
DATE

MATERIAL: SEE L/M

CHECKED

ENGINEER

PROJECT ENGINEER

MFG ENGINEER

Pizza Time Theatre Inc
1213 Innsbruck Dr
Sunnyvale, CA 94086

TITLE YOKE ASSEMBLY

SIZE D
DRAWING NO 00-0268
REV B

SCALE FULL
SHEET 2 OF 3

34.1-2

LIST OF MATERIALS

Chuck E. Cheese's Pizza Time Theatre

REV

00-0268 B

ITEM	90	80	70	60	50	40	30	20	10	PART NUMBER	REFERENCE	DESCRIPTION	L/M
1								1	1	01-0470-01		CYL. DRIVE YOKE EXT.	—
2								2	2	680-0033-01		BEARING, FLANGE 5/8"	—
3								–	1	680-0038-01		BEARING, CYL. 1/4"	—
4								1	1	600-0012-01		AIR CYLINDER	—
5								2	2	680-0010-01		BEARING, FLANGE 1/2"	—
6								–	1	650-0037-01		CLEVIS, D-231-1	—
7								–	1	600-0027-01		AIR CYLINDER	—
8								1pr.	–	650-0006-01		PIVOT BRKT.	—
9								3	1	650-0014-01		CLEVIS	—
10								1	1	630-0033-01		RUBBER WASHER	—
11								–	1	01-0464-01		HEAD TILT MTG. CYL BRKT.	—
12								–	2	01-0463-01		SPACER, HEAD TILT MTG.	—
13													
14								1	1	650-0032-01		ADAPTER, 1/8 NPT TO #10-32	—
15								1	1	630-0010-01		BARB, #10-32 TO 1/16" RT. ANGLE	—
16								1	2	630-0011-01		BARB, 1/8 NPT TO 1/16 HOSE	—
17								–	2	680-0037-01		BEARING, FLANGE NO-W	—
18								1	1	01-0183-01		DELRIN WASHER	—
19								–	1	01-0462-01		HEAD TILT CYL. SHAFT	—
20								–	2	800-0015-01		'E' RING, 1/4" SHAFT	—
21								1	–	800-0003-01		CLEVIS PIN	—
22								1	–	800-0004-01		COTTER PIN	—
23								1	–	01-0194-01		HEAD TILT- FIXED LINK	—

	USED ON		
-10	00-0046-10,20,50,60 00-0200	-60	
-20	00-0046-70,80	-70	
-30		-80	
-40		-90	
-50			

REV	ECO
A	876
B	1136

TITLE

YOKE ASSY

SHT 3 OF 3

REV

A 00-0268 B

A4.1-3

BISHOP GRAPHICS/ACCUPRESS
REORDER NO. A 9624

SYM	ECN NO.	REVISION DESCRIPTION	DATE	APPROVED
A	0976	PRODUCTION RELEASE	3-14-83	F.T.bb
B	1136	DELETED ITEM 13	3-14-83	F.T.bb

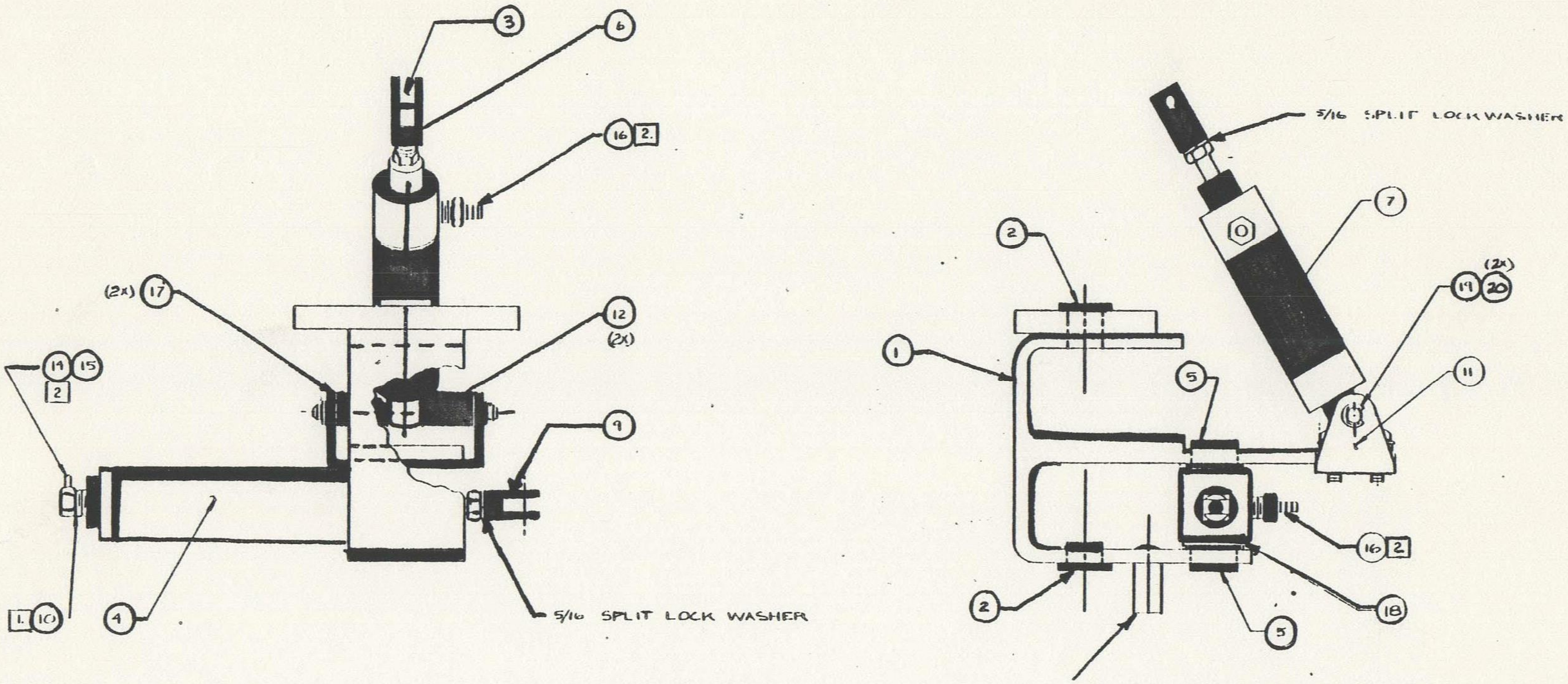
3
6
16 2.
(2x) 17
12
(2x)
14 15
2
9
1. 10
4
5/16 SPLIT LOCK WASHER
5/16 SPLIT LOCK WASHER
7
2
1
(2x)
19 20
11
5
16 2
2
5
18

-10 VERSION
(ROTATE TILT)

1 USE RUBBER WASHER 630-0033 01 ON ITEM 10, DO NOT USE FIBER OR NYLON WASHERS

2. ON ITEM 14 & 16 USE PIPE SEALANT

3. IF ALL BOLTS OR SCREWS LENGTHS SPECIFIED ARE NOT AVAILABLE, USE NEXT CLOSEST SIZE SO THAT 1½ TO 6 THREADS SHOW THROUGH ON HEX NUTS OR NYLOCK NUTS (3 THREADS BEING THE AMOUNT DESIRED) IN ORDER TO PASS INSPECTION

OUTSTANDING ECNs

	00 0046
NEXT ASSY	USED ON
APPLICATION	

DO NOT SCALE DRAWING

DRAWN BY D ADAMS DATE 2/1/83

CHECKED T. TIBBS 2/4/83

ENGINEER

PROJECT ENGINEER

MFG ENGINEER

MATERIAL SEE L/M

FINISH

Pizza Time Theatre Inc
1213 Innsbruck Dr
Sunnyvale, CA 94086

TITLE YOKE ASSEMBLY

SIZE D DRAWING NO 00-0268 REV B

SCALE FULL SHEET 1 OF 3

A	0793	PRODUCTION RELEASE	9-4-81	9/26

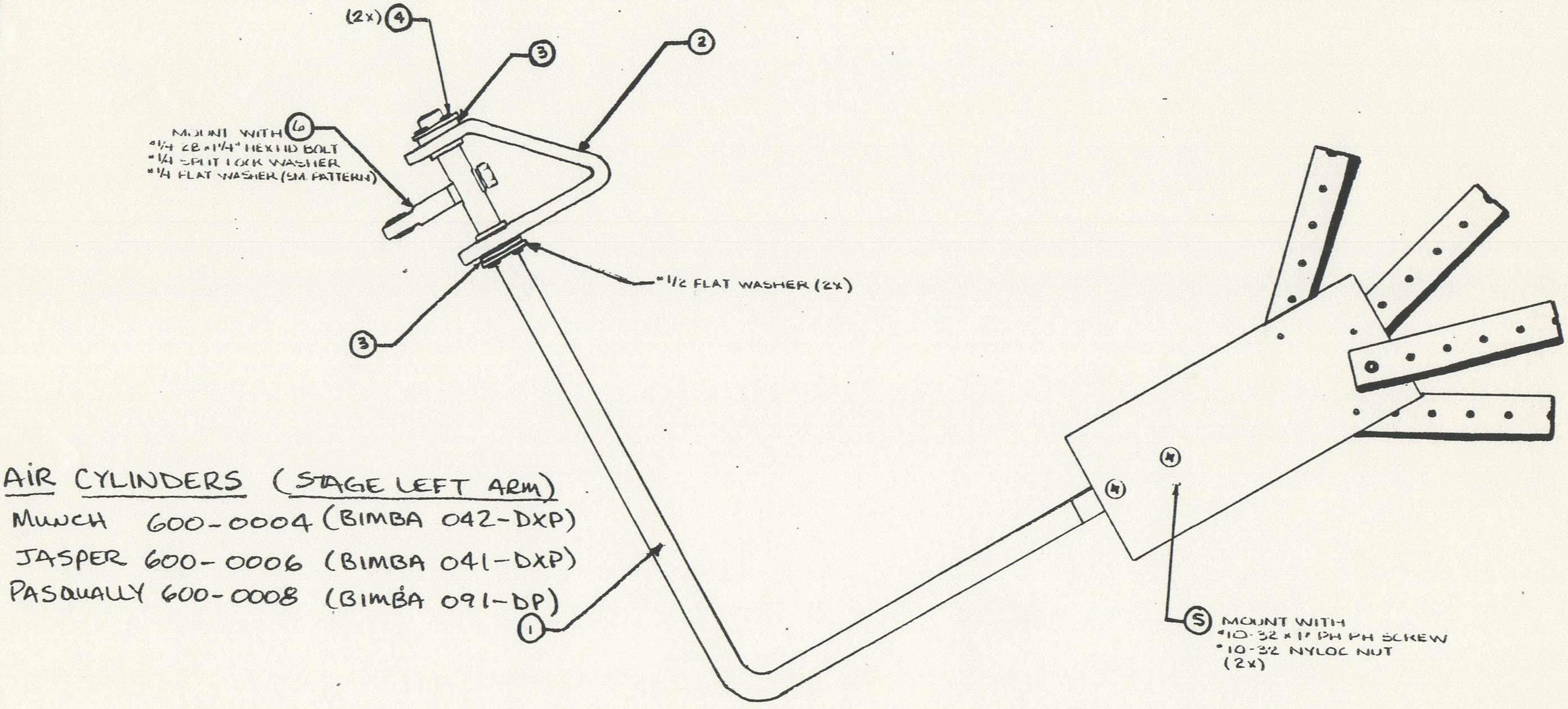
(2x) ④
③
②
MOUNT WITH ⑥
#1/4 28 x 1 1/4" HEX HD BOLT
#1/4 SPLIT LOCK WASHER
#1/4 FLAT WASHER (SM. PATTERN)
#1/2 FLAT WASHER (2x)
③
①
⑤ MOUNT WITH
#10-32 x 1" PH PH SCREW
#10-32 NYLOC NUT
(2x)

AIR CYLINDERS (STAGE LEFT ARM)

MUNCH	600-0004	(BIMBA 042-DXP)
JASPER	600-0006	(BIMBA 041-DXP)
PASQUALLY	600-0008	(BIMBA 091-DP)

OUTSTANDING ECNs

00-0046

SEE L/M

DO NOT SCALE DRAWING

I FORTE 7/30/81

9/1/81

Pizza Time Theatre Inc
1213 Innsbruck Dr
Sunnyvale, CA 94086

STAGE RIGHT ARM ASSEMBLY-FIXED ROTATE

D 00-0238 A

1/1 1 of 2

LIST OF MATERIALS

Chuck E. Cheese's Pizza Time Theatre

	REV
00-0238	A

ITEM	90	80	70	60	50	40	30	20	10	PART NUMBER	REFERENCE	DESCRIPTION	L/M
1									1	01-0332-01		ARM ROD FIXED	—
2									1	01-0109-01		SHOULDER SOCKET	—
3									2	680-0010-01		BEARING, FLANGED	—
4									2	800-0131-01		`E' RING, 1/2" SHAFT	—
5									1	02-0010-10		HAND PLATE ASSY - RIGHT	YES
6									1	680-0026-01		SPHERICAL ROD END	—

	USED ON	
		-60
-10	00-0046-80	-70
-20		-80
-30		-90
-40		
-50		

ECO	REV
0793	A

TITLE

STAGE RIGHT
ARM ASSEMBLY-
FIXED ROTATE REV

A 00-0238 A

SHT 2 OF 2

A4.2-2

BISHOP GRAPHICS/ACCUPRESS
REORDER NO. A 9624

A	0713	PRODUCTION RELEASE	[illegible]	[illegible]
B	0180	ADDED ONE ITEM 18. DELETED ITEMS 19 & 20 AND ADDED ITEM 22 & M16 HDWR	1 18 81	F. Tubbs
C	1071	REPLACED AIR CYLINDER. ARM RODS MODIFIED - M16 HDWR CHANGED	1 18 81	F. Tubbs

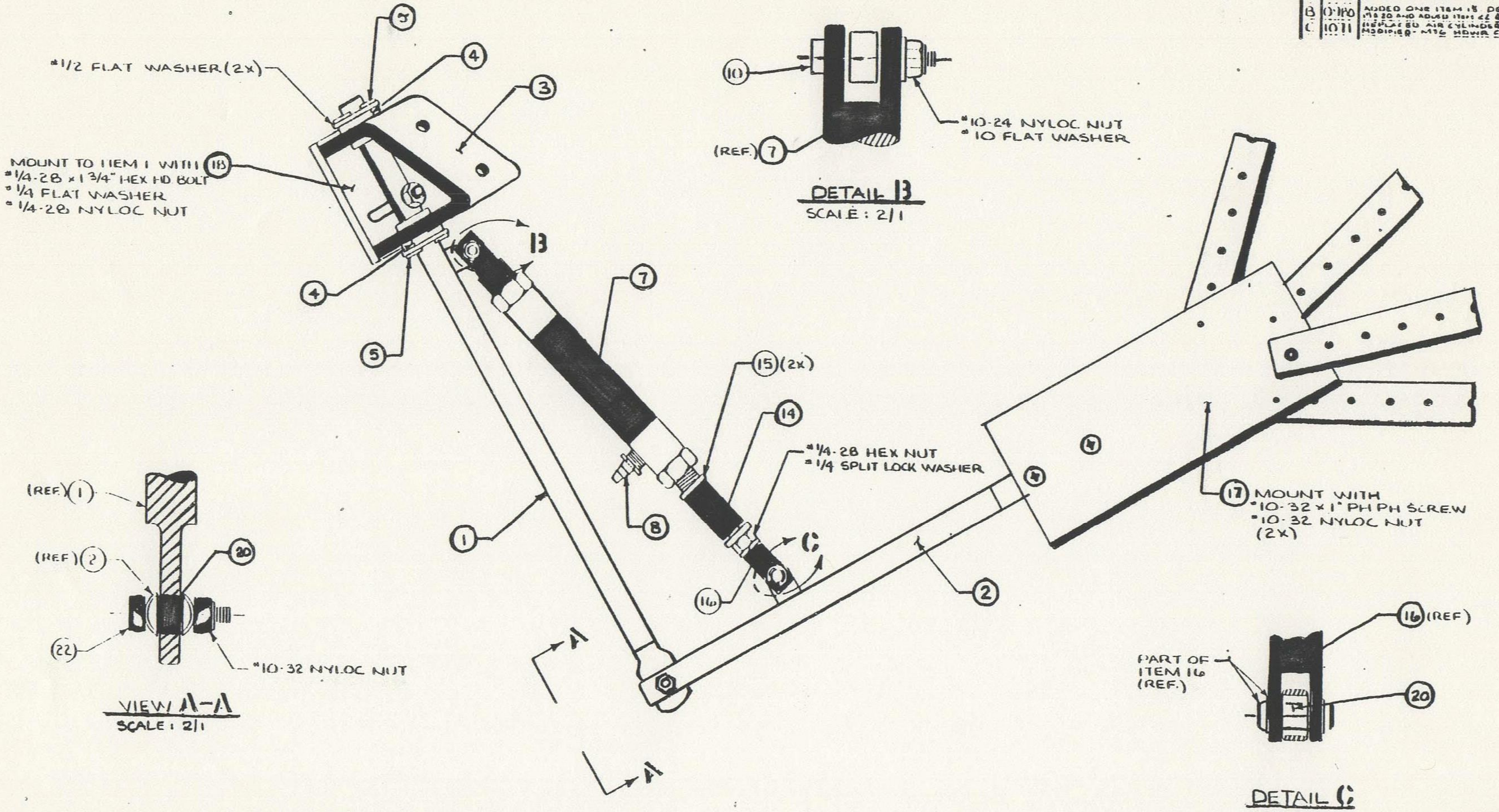
#1/2 FLAT WASHER (2X)
9
4
3
MOUNT TO ITEM 1 WITH 18
#1/4-28 x 1 3/4" HEX HD BOLT
#1/4 FLAT WASHER
#1/4-28 NYLOC NUT
19
4
5
B
7
15 (2X)
14
#1/4-28 HEX NUT
#1/4 SPLIT LOCK WASHER
8
1
16
C
2
17 MOUNT WITH
#10-32 x 1" PH PH SCREW
#10-32 NYLOC NUT
(2X)
A
A
10
#10-24 NYLOC NUT
#10 FLAT WASHER
(REF.) 7
DETAIL B
SCALE: 2/1
(REF.) 1
(REF.) 2
20
22
#10-32 NYLOC NUT
VIEW A-A
SCALE: 2/1
16 (REF)
PART OF ITEM 16 (REF.)
20
DETAIL C
SCALE: 2/1

NOTES:

1. WHEN BOLT OR SCREW LENGTHS SPECIFIED ARE NOT AVAILABLE, USE NEXT AVAILABLE SIZE, SO THAT FROM 1 1/2 TO 6 THREADS REMAIN EXPOSED AFTER MOUNTING NUTS ARE TIGHTENED IN ORDER TO PASS INSPECTION. (3 THREADS SHOWING BEING THE AMOUNT DESIRED.)

OUTSTANDING ECNs

00096

MATERIAL
SEE L/M

DO NOT SCALE DRAWING

DRAWN BY L. FORTE

Pizza Time Theatre Inc
1213 Innsbruck Dr
Sunnyvale, CA 94086

STAGE RIGHT
ARM ASSEMBLY-
POWER UP

D 00-0239 C

SCALE 1/1 SHEET 1 of 2

A4.3-1

LIST OF MATERIALS

Chuck E. Cheese's

REV

00-0239 C

ITEM	90	80	70	60	50	40	30	20	10	PART NUMBER	REFERENCE	DESCRIPTION	L/M
1									1	01-0333-01		UPPER ARM ROD-POW. UP	—
2									1	01-0334-01		LOWER ARM ROD-POW. UP	—
3									1	01-0109-01		SHOULDER SOCKET	—
4									2	680-0010-01		BEARING, FLANGED	—
5									2	800-0131-01		"E" RING - 1/2" SHAFT	—
6													
7									1	600-0028-01	OLD STYLE ARM USES 600-0007-01	AIR CYLINDER	—
8									1	630-0011-01		BARB, 1/8 NPT TO 1/8 O.D.	—
9													
10									1	800-0069-01		SHOULDER SCREW #10-24	—
11													
12													
13													
14									1	01-0186-01		SLEEVE, FLAG POLE	—
15									2	01-0321-01		LEATHER WASHER	—
16									1	650-0007-01		CLEVIS # D-166-3	—
17									1	02-0010-10		HAND PLATE ASSY-RIGHT	YES
18									1	01-0041-01		ARM PIVOT LOCK BRKT.	—
19													
20									2	680-0034-01		BEARING-CYL. (NO-LU)	—
21													
22									1	800-0132-01		SHOULDER SCREW #10-32	—

	USED ON		
-10	00-0046-10 -70	-60	
-20		-70	
-30		-80	
-40		-90	
-50			

REV	ECO
A	0793
B	0980
C	1071

TITLE

STAGE RIGHT
ARM ASSEMBLY-
POWER UP

REV

A 00-0239-C

SHT 2 OF 2

A4.3-2

BISHOP GRAPHICS/ACCUPRESS
REORDER NO. A-9524

A	0793	PRODUCTION RELEASE	3/1/81	F.G.

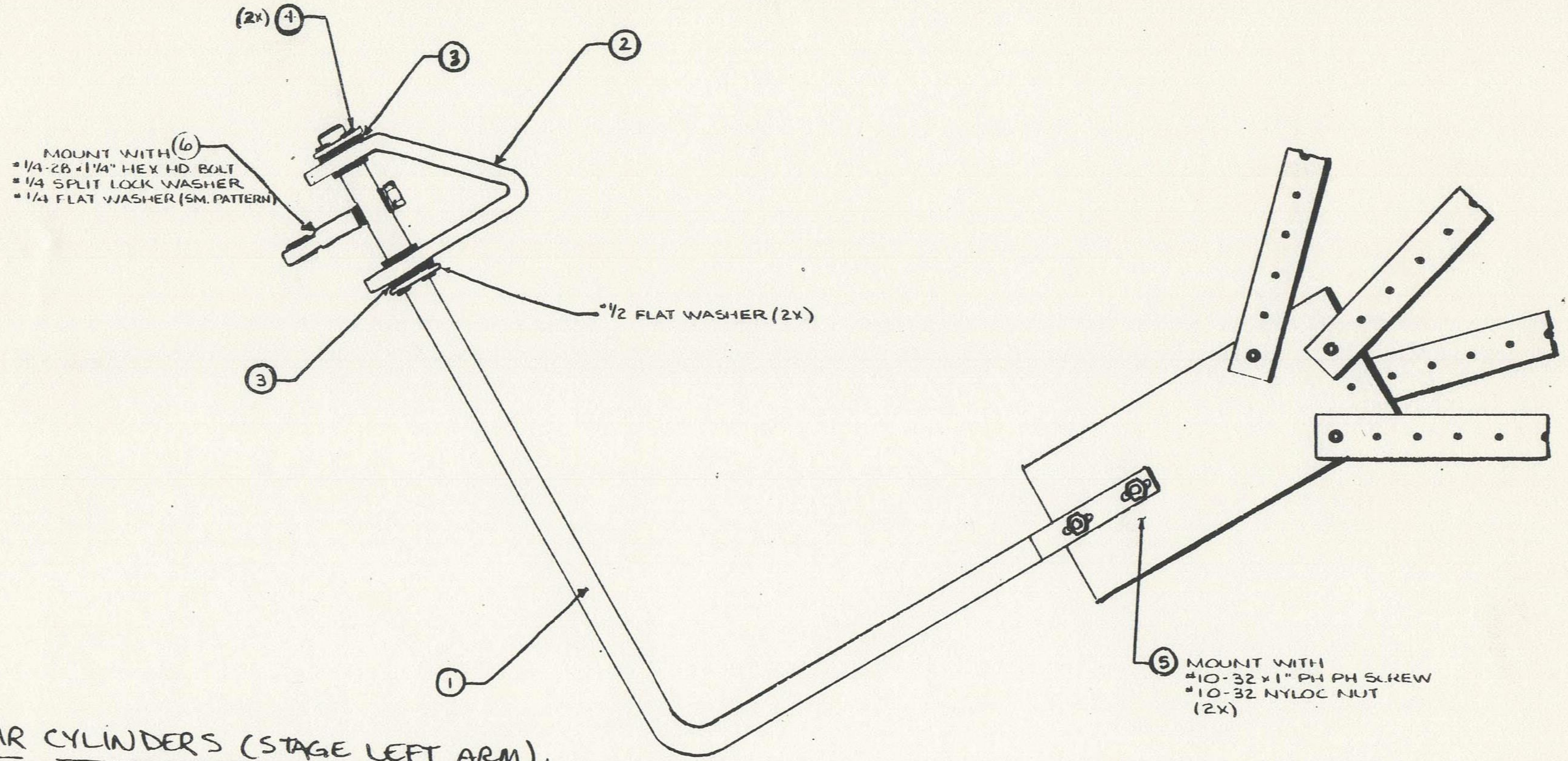

(2x) ④
③
②
MOUNT WITH ⑥
#1/4-28 × 1 1/4" HEX HD BOLT
#1/4 SPLIT LOCK WASHER
#1/4 FLAT WASHER (SM. PATTERN)
#1/2 FLAT WASHER (2x)
③
①
⑤ MOUNT WITH
#10-32 × 1" PH PH SCREW
#10-32 NYLOC NUT
(2x)

AIR CYLINDERS (STAGE LEFT ARM).

MUNCH	600-0004-01	(BIMBA 042-DXP)
JASPER	600-0006-01	(BIMBA 041-DXP)
PASQUALLY	600-0008-01	(BIMBA 091-DI)

OUTSTANDING ECNs

00-0016
00-0016

DO NOT SCALE DRAWING

SEE L/M

L. FORTE 7/30/81

Pizza Time Theatre Inc
1213 Innsbruck Dr.
Sunnyvale, CA 94086

STAGE LEFT
ARM ASSEMBLY-
FIXED ROTATE

D 00-0240 A

1/1 SHEET 1 of 2

LIST OF MATERIALS

Chuck E. Cheese's Pizza Time Theatre

REV

00-0240 A

ITEM	90	80	70	60	50	40	30	20	10	PART NUMBER	REFERENCE	DESCRIPTION	L/M
1									1	01-0332-01		ARM ROD FIXED	—
2									1	01-0109-01		SHOULDER SOCKET	—
3									2	680-0010-01		BEARING, FLANGED	—
4									2	800-0131-01		`E' RING, 1/2" SHAFT	—
5									1	02-0010-20		HAND PLATE ASSY-LEFT	YES
6									1	680-0026-01		SPHERICAL ROD END	—

	USED ON		
-10	00-0046-10-20 -70-80	-60	
-20		-70	
-30		-80	
-40		-90	
-50			

ECO	REV
0793	A

TITLE

STAGE LEFT
ARM ASSEMBLY-
FIXED ROTATE REV

A 00-0240 A

SHT 2 OF 2

A4.4-2

BISHOP GRAPHICS/ACCUPRESS
REORDER NO. A-9624

A5. Character
Torso/Base

LTR	ECN NO	DESCRIPTION	DATE	APPROVED
A	0115	PRODUCTION RELEASE	[illegible]	[illegible]
B	0176	ADDED ITEM 8 & MTG HDWR	[illegible]	[illegible]
C	0123	MTG HARDWARE CHANGED	[illegible]	RH
D	0183	ADDED ITEMS 9 AND 10. ITEM 1 WAS 02-0345-10, ITEM 1 IS 06-0807-10	[illegible]	[illegible]
E	1042	MTG HARDWARE FOR ITEM 1 [illegible]	[illegible]	FTH
F	1065	ITEM 4 WAS 06-00-36-20 ITEM 4 IS 00-0016-20	[illegible]	FTH

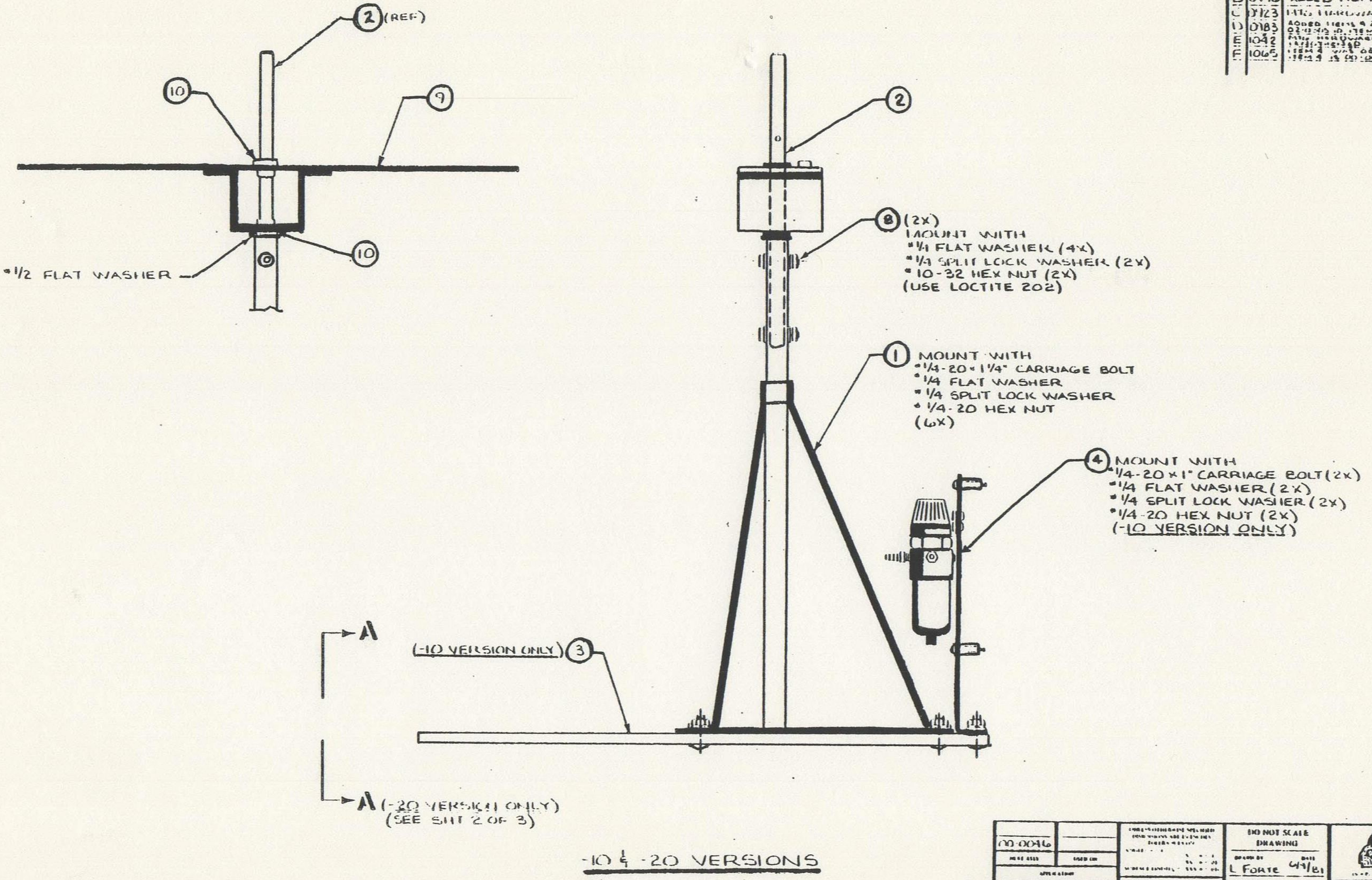

2 (REF)
10
9
10
#1/2 FLAT WASHER
2
8 (2X)
MOUNT WITH
#1/4 FLAT WASHER (4X)
#1/4 SPLIT LOCK WASHER (2X)
#10-32 HEX NUT (2X)
(USE LOCTITE 202)
1 MOUNT WITH
#1/4-20 × 1 1/4" CARRIAGE BOLT
#1/4 FLAT WASHER
#1/4 SPLIT LOCK WASHER
#1/4-20 HEX NUT
(6X)
4 MOUNT WITH
1/4-20 × 1" CARRIAGE BOLT (2X)
#1/4 FLAT WASHER (2X)
#1/4 SPLIT LOCK WASHER (2X)
#1/4-20 HEX NUT (2X)
(-10 VERSION ONLY)
(-10 VERSION ONLY) 3
A
A (-20 VERSION ONLY)
(SEE SHT 2 OF 3)

-10 & -20 VERSIONS

OUTSTANDING ECNs

00-0046

DO NOT SCALE DRAWING

DRAWN BY L FORTE DATE 4/9/81

CHECKED [illegible] 11/16/81

MATERIAL SEE L/M

Pizza Time Theatre Inc
1213 Innsbruck Dr
Sunnyvale, CA 94086

TITLE BASE SUPPORT ASSEMBLY

SIZE D DRAWING NO 00-0236 REV F

SCALE 1/2 SHEET 1 of 3

LIST OF MATERIALS

Chuck E. Cheese's Pizza Time Theatre

	REV
00-0236	F

ITEM	90	80	70	60	50	40	30	20	10	PART NUMBER	REFERENCE	DESCRIPTION	L/M
1								1	1	02-0309-10		BASE SUPPORT WELD.	—
2								1	1	01-0330-01		DRIVE YOKE BASE SUP. SHAFT	—
3								-	1	01-0331-01		CHAR. MTG. BOARD	—
4								1	1	00-0016-20		FILTER/REG. ASSY	YES
5								1	-	01-0197-01		CAB. CHAR. MTG. STOOL	—
6								1	-	01-0200-01		ARM MECH. MTG STRIP	—
7								4	-	800-0095-01		WOOD SCREW #10 x 1"	—
8								2	2	800-0133-01		SHOULDER SCREW #10-32	—
9								1	1	02-0345-10		SHOULDER PLATE WELD	—
10								2	2	680-0033-01		BEARING, FLANGE	—

	USED ON	
		-60
-10	00-0046 -10 -70 -20 -80	-70
-20	00-0046 -50 -60	-80
-30		-90
-40		
-50		

REV	ECO
A	0775
B	0796
C	0923
D	0983
E	1042
F	1065

TITLE

BASE SUPPORT
ASSEMBLY

REV
A 00-0236 F

SHT 3 OF 3

A5.1-2

BISHOP GRAPHICS/ACCUPRESS
REORDER NO. A-9624

[illegible]	[illegible]	REVISION DESCRIPTION	DATE	APPROVED
A	0454	NEW DWG. - OBSOLETED 00 0031	[illegible]	[illegible]
B	0459	-10 AND -20 VERSIONS REVERSED ON L/M & DWG. ADDED ITEM 6	[illegible]	[illegible]
C	[illegible]	ITEM 4 WAS 650-0030-[illegible] ITEM 4 IS 650-0010-[illegible]	[illegible]	RH
D	0852	ADDED ITEM 7 AND NOTE 1.	[illegible]	RH
E	0933	CREATE NEW FILTER REGULATOR ASSY DWG -30	[illegible]	FYI
F	1064	WHERE USED UPDATED	1-19-81	F[illegible]
G	1125	ADDED NOTE 3 & CORRECTED AIR FLOW DIRECTION ARROW	[illegible]	MAC
H	1273	DELETE PTT P/N 610-0003 & P/N 650-0002 AND ADD PTT P/N 650-0099 & 610-0018 & 610-0016	[illegible]	MAC

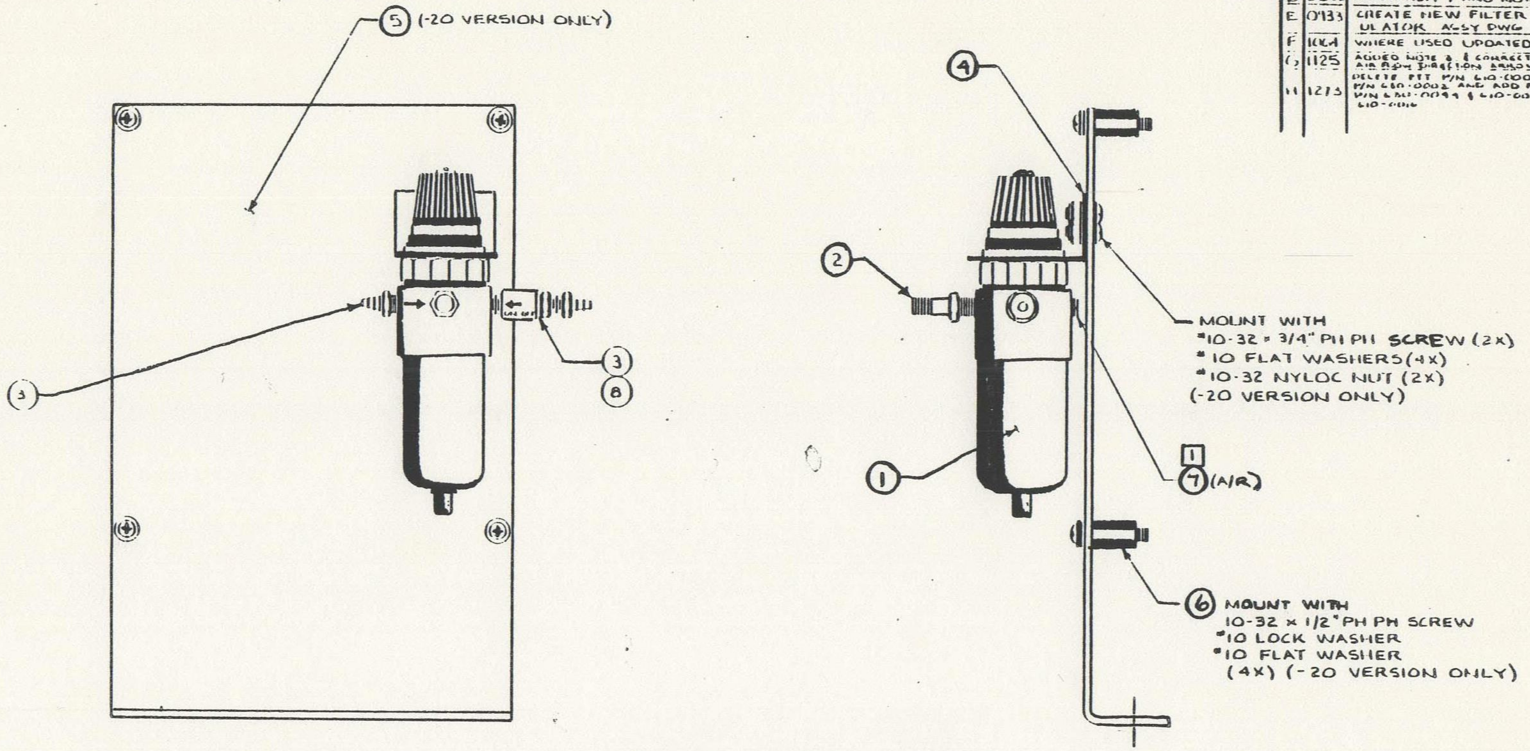

MOUNT WITH
#10-32 × 3/4" PH PH SCREW (2X)
#10 FLAT WASHERS (4X)
#10-32 NYLOC NUT (2X)
(-20 VERSION ONLY)

MOUNT WITH
10-32 × 1/2" PH PH SCREW
#10 LOCK WASHER
#10 FLAT WASHER
(4X) (-20 VERSION ONLY)

(-10 & -20 VERSION SHOWN)

NOTES:

1. 1/8 NPT HOLE PLUG (ITEM 1) SUPPLIED WITH REGULATOR (ITEM 1). RETURN ALL UNUSED 1/8 NPT HOLE PLUGS TO STOCK UNDER P.T.T. PART NO. 650-0009-01.
2. WHEN BOLT OR SCREW LENGTHS SPECIFIED ARE NOT AVAILABLE, USE NEXT AVAILABLE SIZE SO THAT FROM 1 1/2 TO 6 THREADS REMAIN EXPOSED AFTER MOUNTING NUTS ARE TIGHTENED, IN ORDER TO PASS INSPECTION. (3 THREADS SHOWING BEING THE AMOUNT DESIRED).
3. USE TEFLON TAPE ON ALL MALE, THREADED, 1/8 NPT FITTINGS.

00-0226
00-0250
00-0218
00-0217
00-0211
00-0351
00-0371
00-0058
00-0059

OUTSTANDING ECNs

DO NOT SCALE DRAWING

L. FALIE 4/1/80

MATERIAL
SEE L/M

Pizza Time Theatre Inc.
10060 Bubb Road
Cupertino, CA 95014

FILIER REG. ASSY-
AUTO DRAIN

D
00-0016
H
FULL
1 of 3

A5.2-1

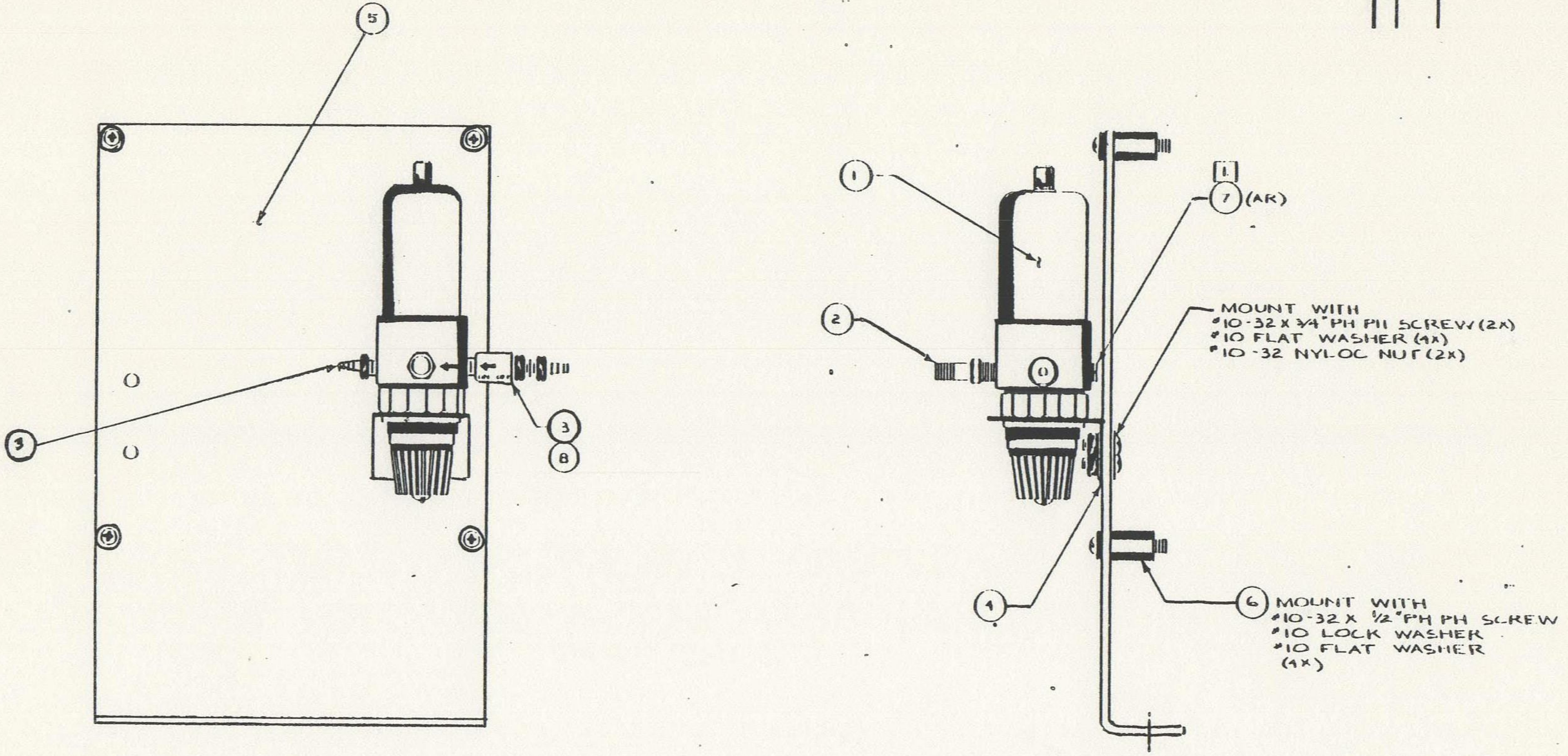

MOUNT WITH
#10-32 X 3/4" PH PH SCREW (2X)
#10 FLAT WASHER (4X)
#10-32 NYLOC NUT (2X)

MOUNT WITH
#10-32 X 1/2" PH PH SCREW
#10 LOCK WASHER
#10 FLAT WASHER
(4X)

(-30 VERSION SHOWN)

OUTSTANDING ECNs

DO NOT SCALE DRAWING

DRAWN BY: DADAMS DATE: 10/2/81

CHECKED: A. Toole 11/5/81

MATERIAL: SEE L/M

Pizza Time Theatre Inc.
10060 Bubb Road
Cupertino, CA 95014

TITLE: FILTER REG. ASSY AUTO DRAIN

SIZE: D DRAWING NO: 00 0016 REV: H

SCALE: FULL SHEET 2 of 3

LIST OF MATERIALS

Chuck E. Cheese's Pizza Time Theatre

00-0016 REV H

ITEM	90	80	70	60	50	40	30	20	10	PART NUMBER	REFERENCE	DESCRIPTION	L/M
1							1	1	1	610-0015-01		AIR FILTER REGULATOR	—
2							1	1	1	630-0006-01		TIRE VALVE TO 1/8 NPT	—
3							2	2	2	630-0044-01		NIPPLE 1/4 NPT TO 1/8 ID	—
4							1	1	1	650-0010-01		MTG. BRKT, FILTER REG.	—
5							1	1	—	01-0097-01		MTG. PLATE, FILTER REG.	—
6							4	4	—	580-0038-01		STANDOFF, M/F #10-32 x 3/4	—
7							A/R	A/R	A/R	650-0009-01		1/8 NPT PIPE PLUG	—
8							1	1	1	610-0016-01		SLEEVE VALVE, 3W-250	—

	USED ON		
-10	00-0054 00-0061	-30	00-0218
-10	00-0250	-40	
-20	00-0050 00-0058	-50	
-20	00-0236	-60	
-30	00-0192 00-0217		

REV	A	B	C	D	E	F	G	H
ECO	0454	0459	0669	0852	0933	1064	1125	1273

TITLE

FILTER REG.
ASSY - AUTO
DRAIN

A 00-0016 REV H

SHT 3 OF 3

A5.2-3

BISHOP GRAPHICS/ACCUPRESS
REORDER NO. A 9624

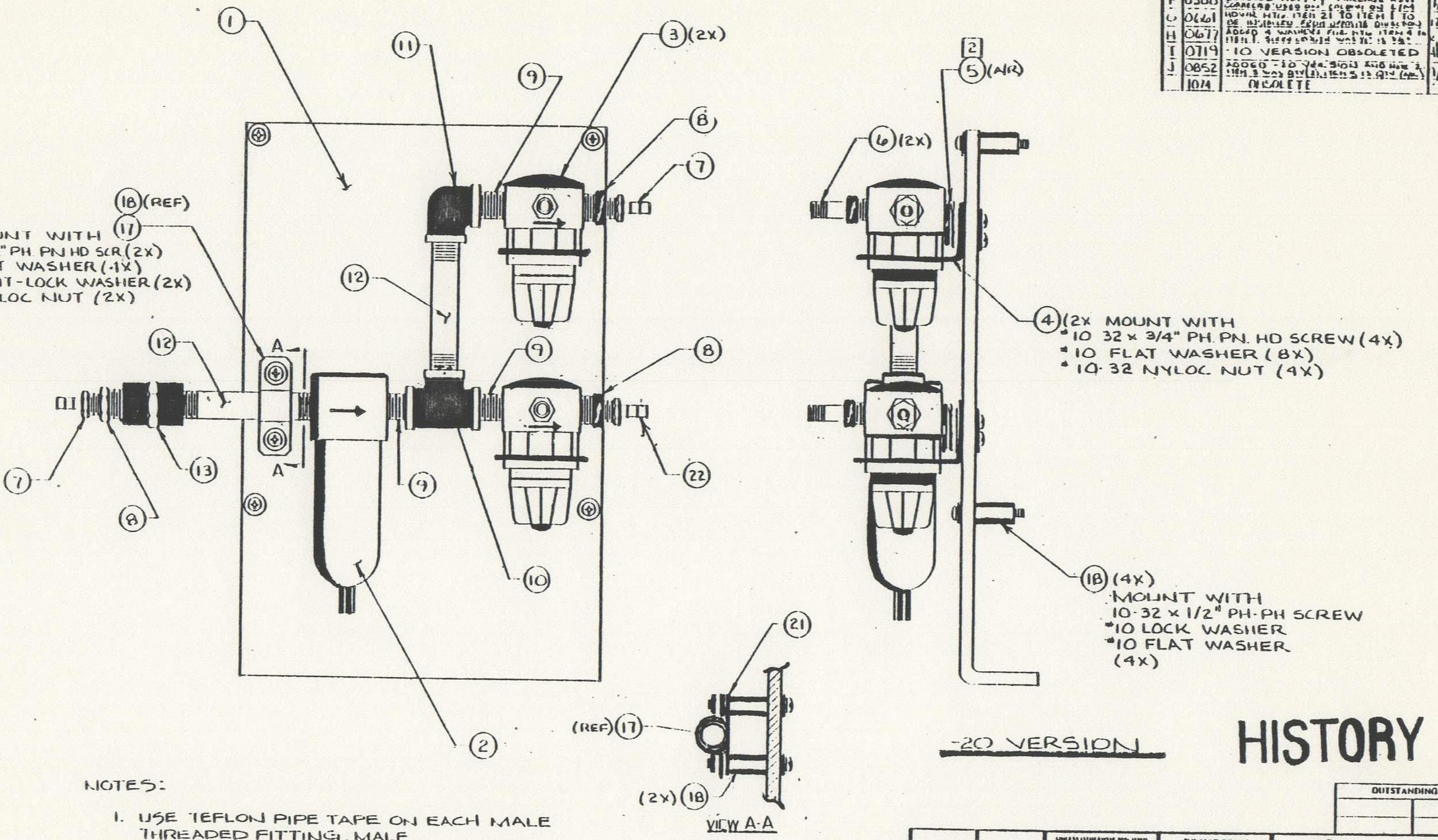
1
11
9
3 (2X)
8
7
18 (REF)
17
MOUNT WITH
#10-32 × 1/2" PH. PN HD SCR (2X)
#10 FLAT WASHER (4X)
#10 SPLIT-LOCK WASHER (2X)
#10 NYLOC NUT (2X)
12
Y
A
A
12
9
8
7
8
13
9
10
22
2
2
5 (A/R)
6 (2X)
4 (2X MOUNT WITH
#10 32 × 3/4" PH. PN. HD SCREW (4X)
#10 FLAT WASHER (8X)
#10-32 NYLOC NUT (4X)
18 (4X)
MOUNT WITH
10-32 × 1/2" PH-PH SCREW
#10 LOCK WASHER
#10 FLAT WASHER
(4X)
21
(REF) 17
(2X) 18
VIEW A-A

-20 VERSION

HISTORY

NOTES:

1. USE TEFLON PIPE TAPE ON EACH MALE THREADED FITTING, MALE.

2. 1/8 NPT HOLE PLUG (ITEM 5) SUPPLIED WITH REGULATOR (ITEM 3). RETURN ALL UNUSED 1/8 NPT HOLE PLUGS TO STOCK UNDER P.T.I. PART NO. 650-0001-01.

REV	ECN NO	DESCRIPTION	DATE	APPROVED
A	0341	NEW ITEM 21	6/[illegible]	[illegible]
B	0363	MISC. CHANGES	[illegible]	[illegible]
C	0408	CONDUIT CLAMP CHANGED FROM 1/2" "U" TO 3/4" "U"	[illegible]	[illegible]
D	0425	DELETED ITEM 19 AND ADDED ITEM [illegible] CHANGED HARDWARE FOR MOUNTING	[illegible]	[illegible]
E	0450	DELETED ITEMS [illegible] ITEM [illegible] 00-0[illegible], ITEM 18 [illegible] CHANGED, [illegible] 0-00.	[illegible]	[illegible]
F	0500	DELETED ITEM 14 - AIRLINE ASSY [illegible] USED [illegible] COLUMN ON L/M	[illegible]	[illegible]
G	0661	MOVING MTG. ITEM 21 TO ITEM 1 TO BE INSTALLED FROM OPPOSITE DIRECTION	12-23	RH
H	0677	ADDED 4 WASHERS FOR MTG ITEM 4 TO ITEM 1. [illegible]	[illegible]	[illegible]
I	0719	-10 VERSION OBSOLETED	[illegible]	[illegible]
J	0852	ADDED -20 VERSION AND NOTE 2. ITEM 3 WAS QTY (2), ITEM 5 IS QTY (A/R)	[illegible]	RH
	1014	OBSOLETE	[illegible]	[illegible]

OUTSTANDING ECNs

00 0236
NEXT ASSY
USED ON
APPLICATION

UNLESS OTHERWISE SPECIFIED DIMENSIONS ARE IN INCHES

DO NOT SCALE DRAWING

DRAWN BY [illegible]
CHECKED [illegible] 1/21/71

MATERIAL SEE L/M

FINISH

Pizza Time Theatre Inc.
10960 Bubb Road
Cupertino, CA 95014

TITLE AIR FILTER / REGULATOR ASSY

SIZE D
DRAWING NO 00-0036
REV J
SCALE FULL
SHEET 1 of 3

A5.3-1

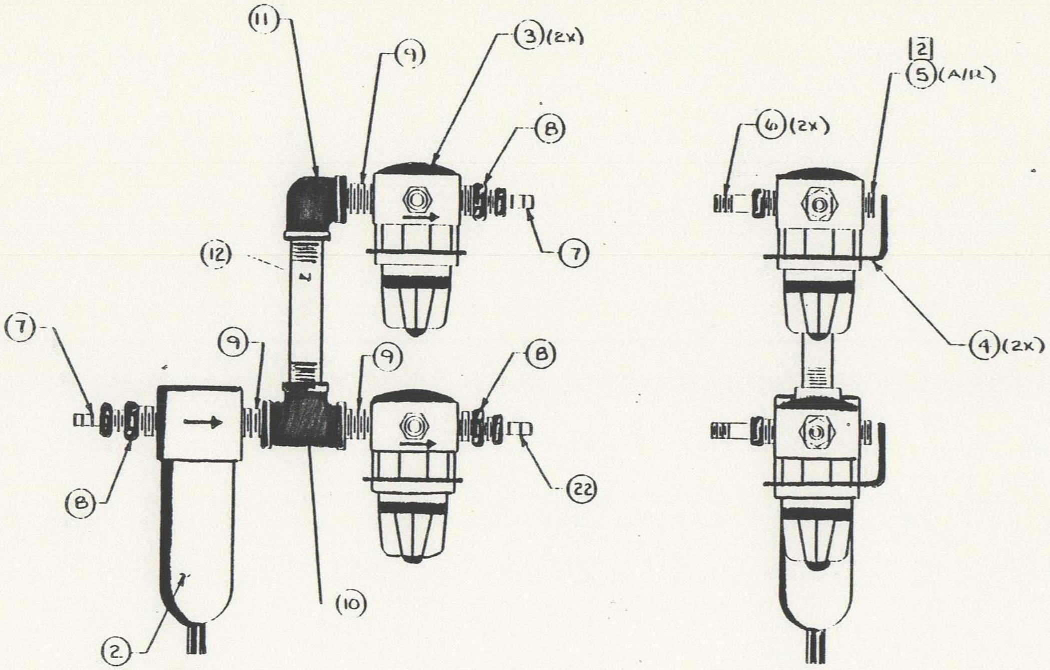
(11)
(9)
(3)(2x)
(8)
(7)
(12)
(7)
(9)
(9)
(8)
(8)
(22)
(10)
(2)
[2]
(5)(A/R)
(6)(2x)
(4)(2x)

-30 VERSION

HISTORY

OUTSTANDING ECNs

00-0251	
NEXT ASSY	USED ON
APPLICATION	

DO NOT SCALE DRAWING

DRAWN BY | DATE

CHECKED

ENGINEER

PROJECT ENGINEER

MFG ENGINEER

MATERIAL

FINISH

Pizza Time Theatre Inc
1213 Innsbruck Dr
Sunnyvale, CA 94086

TITLE AIR FILTER/REGULATOR ASSY

SIZE	DRAWING NO	REV
D	00-0036	J

SCALE 1/1 | SHEET 2 of 3

A5.3-2

LIST OF MATERIALS

CHUCK E. CHEESE'S PIZZA TIME THEATRE

	REV
00-0036	J

ITEM	90	80	70	60	50	40	30	20	10	PART NUMBER	REFERENCE	DESCRIPTION	L/M
1							–	1		01-0097-01		FILTER MOUNTING PLATE	—
2							1	1		610-0006-01		FILTER	—
3							2	2		610-0009-01		REGULATOR	—
4							2	2		650-0010-01		REGULATOR MTG. BRKT.	—
5							A/R	A/R		650-0009-01		1/8 NPT PIPE PLUG	—
6							2	2		630-0006-01		VALVE STEM FITTING	—
7							2	2		630-0002-01		BARB 1/8 NPT TO 1/8 TUBE	—
8							3	3		630-0022-01		ADAPTER 1/4 NPT MALE TO 1/8 NPT FEM	—
9							3	3		630-0021-01		NIPPLE, 1/4 NPT - MALE/MALE	—
10							1	1		630-0020-01		1/4 NPT FEMALE TEE	—
11							1	1		630-0018-01		1/4 NPT FEMALE ELBOW	—
12							1	2		730-0003-01		1/4 NPT PIPE 3" LG.	—
13							–	1		630-0019-01		COUPLING - STRAIGHT 1/4 NPT FEM	—
14													
15													
16													
17							–	1		800-0103-01		CONDUIT CLAMP 1/4" U	—
18							–	6		580-0038-01		10-32 x 3/4 THD. M/F STAND OFF	—
19													
20													
21							–	1		01-0251-01		PIPE SUPPORT STRAP	—
22							1	1		630-0011-01		BARB 1/8 NPT TO 1/16 TUBE	—

	USED ON	
		-60
-10		-70
-20	00-0236	-80
-30	00-0250	-90
-40		
-50		

REV	ECO
A	0349
B	0363
C	0408
D	0425
E	0450
F	0500
G	0661
H	0677
I	0719
J	0852

TITLE

AIR FILTER /
REGULATOR
ASSY

		REV
A	00-0036	J

SHT 3 OF 3

A5.3-3

BISHOP GRAPHICS/ACCUPRESS
REORDER NO. A 9624

A6. Character Supplementals

A	(Y)14.	PRODUCTION RELEASE		
B	1356	ADD SPACER 800-0140 IN 4 PLACES	1/11/	HC

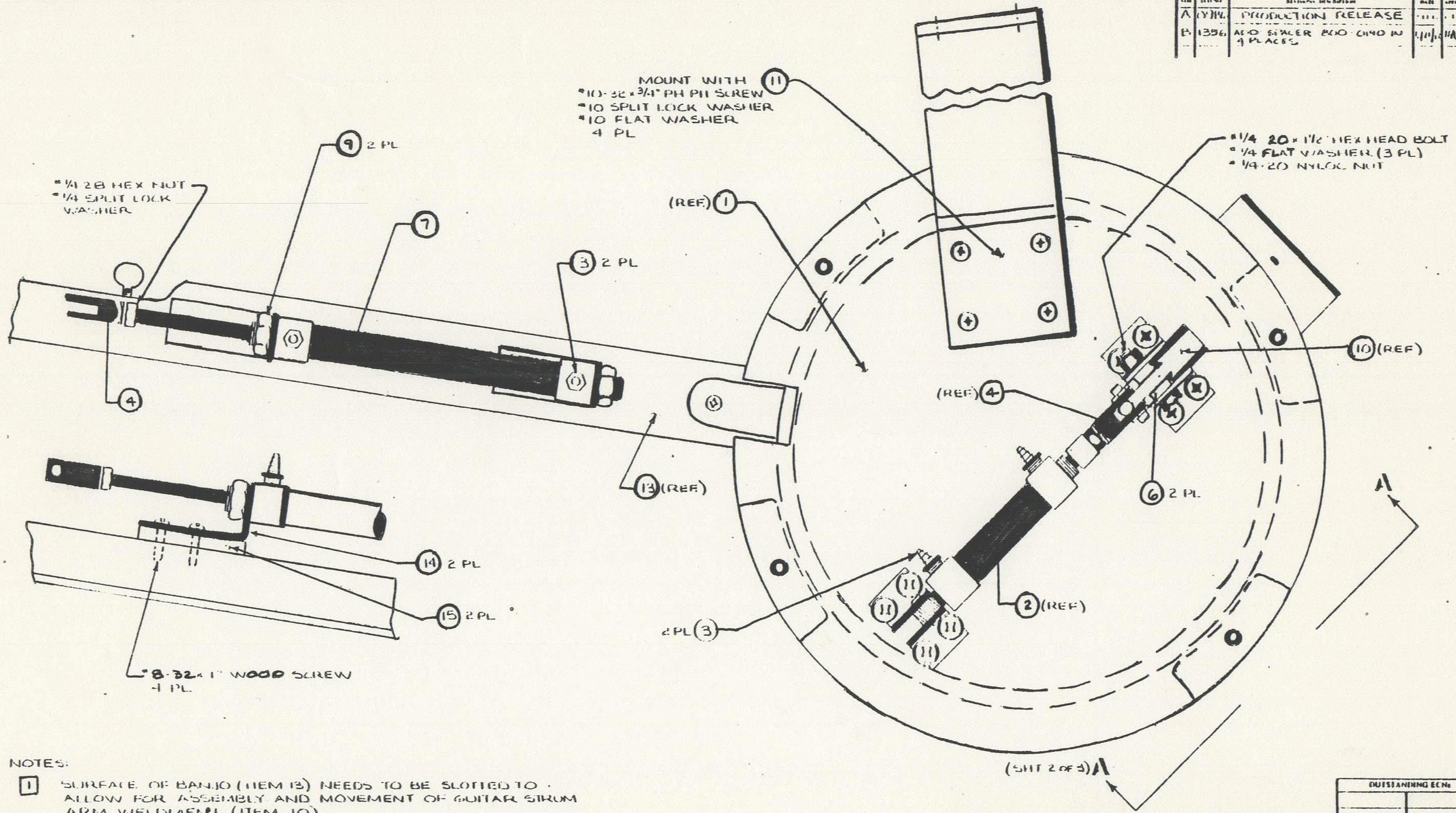

8
7
6
5
4
3
2
1
D
C
B
A
MOUNT WITH
#10-32 × 3/4" PH PH SCREW
#10 SPLIT LOCK WASHER
#10 FLAT WASHER
4 PL
11
9 2 PL
#1/4 28 HEX NUT
#1/4 SPLIT LOCK WASHER
7
3 2 PL
4
(REF) 1
#1/4 20 × 1 1/2 HEX HEAD BOLT
#1/4 FLAT WASHER (3 PL)
#1/4-20 NYLOC NUT
10 (REF)
(REF) 4
6 2 PL
13 (REF)
A
2 (REF)
2 PL 3
14 2 PL
15 2 PL
#8-32 × 1" WOOD SCREW
4 PL
(SHT 2 OF 3) A

NOTES:

1. SURFACE OF BANJO (ITEM 13) NEEDS TO BE SLOTTED TO ALLOW FOR ASSEMBLY AND MOVEMENT OF GUITAR STRUM ARM WELDMENT (ITEM 10)
2. WHEN BOLT OR SCREW LENGTHS SPECIFIED ARE NOT AVAILABLE, USE NEXT AVAILABLE SIZE, SO THAT FROM 1 1/2 TO 6 THREADS REMAIN EXPOSED AFTER MOUNTING NUTS ARE TIGHTENED. (3 THREADS SHOWING BEING THE AMOUNT DESIRED).

OUTSTANDING ECNs

DO NOT SCALE DRAWING	DRAWN BY L. FORTE	DATE 1/24/8	Pizza Time Theatre Inc 1213 Innsbruck Dr Sunnyvale, CA 94086
MATERIAL SEE L/M	CHECKED		TITLE BANJO ASSY - JASPER
			SIZE D DRAWING NO 00-0265 REV B
			SCALE 1/1 SHEET 1 OF 3

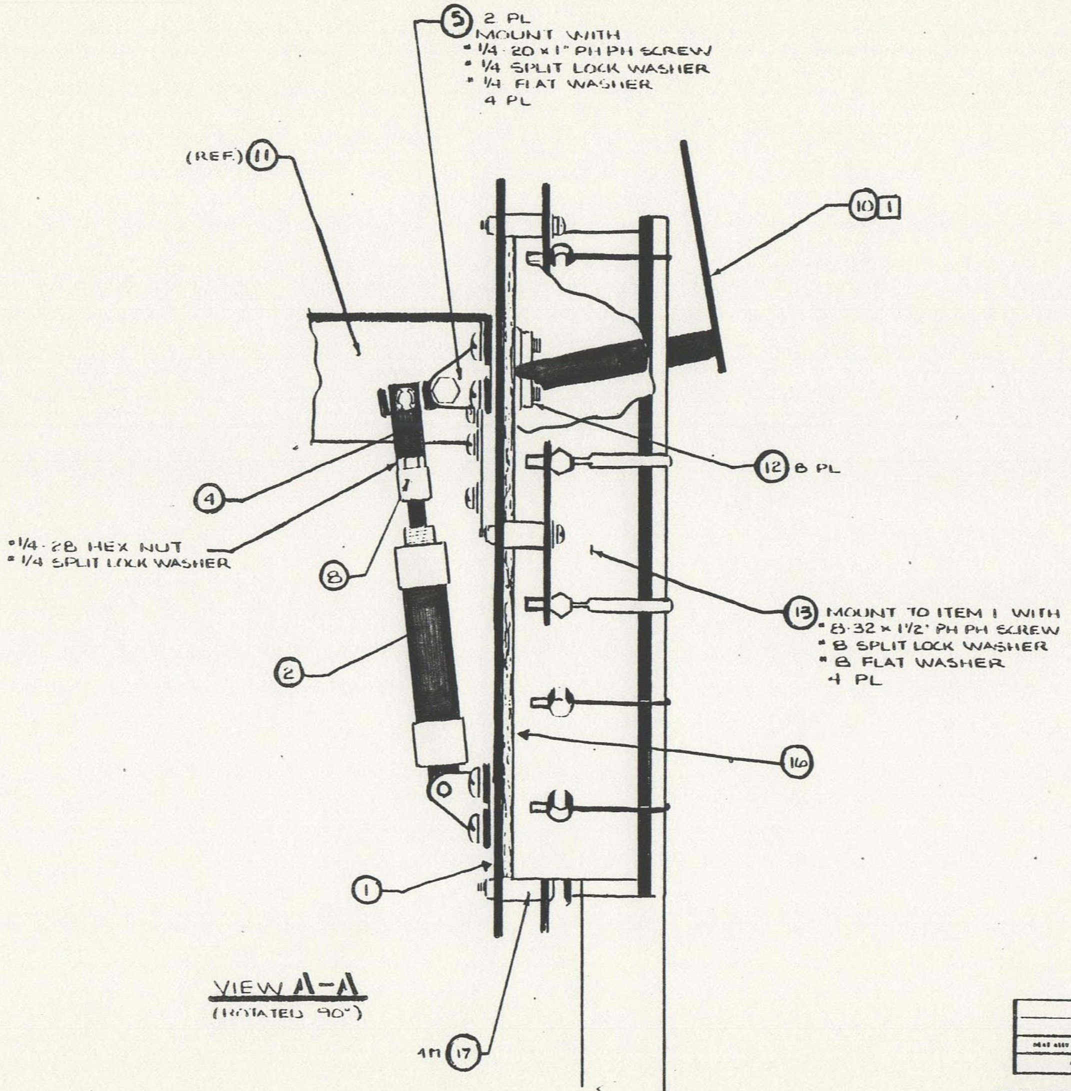
⑤ 2 PL
MOUNT WITH
#1/4-20 x 1" PH PH SCREW
#1/4 SPLIT LOCK WASHER
#1/4 FLAT WASHER
4 PL
(REF.) ⑪
⑩ 1
⑫ 8 PL
④
#1/4-28 HEX NUT
#1/4 SPLIT LOCK WASHER
⑧
⑬ MOUNT TO ITEM 1 WITH
#8-32 x 1 1/2" PH PH SCREW
#8 SPLIT LOCK WASHER
#8 FLAT WASHER
4 PL
②
⑯
①
4M ⑰

VIEW A-A
(ROTATED 90°)

OUTSTANDING ECNs

NEXT ASSY | USED ON
APPLICATION

DO NOT SCALE DRAWING

DRAWN BY DATE

CHECKED

ENGINEER

PRODUCT ENGINEER

MFG ENGINEER

MATERIAL

FINISH

Pizza Time Theatre Inc
1213 Innsbruck Dr
Sunnyvale, CA 94086

TITLE
BANJO ASSY-
JASPER

SIZE D
DRAWING NO 00-0265
REV B
SCALE 1/1
SHEET 2 OF 3

A6.1-2

LIST OF MATERIALS

Chuck E. Cheese's Pizza Time Theatre

00-0265 REV B

ITEM	90	80	70	60	50	40	30	20	10	PART NUMBER	REFERENCE	DESCRIPTION	L/M
1									1	01-0439-01		BANJO PLATE - JASPER	—
2									1	600-0006-01		AIR CYLINDER	—
3									4	630-0011-01		BARB, 1/8 NPT TO 1/16 TUBE	—
4									2	650-0007-01		CLEVIS	—
5									2	650-0006-01		PIVOT BRKT. (PAIR)	—
6									2	01-0114-03		SPACER	—
7									1	600-0024-01		AIR CYLINDER	—
8									1	01-0186-02		SPACER	—
9									2	800-0136-01		MTG. NUT	—
10									1	02-0308-10		GUITAR STRUM HAND WELD,	—
11									1	01-0440-01		BANJO SUPPORT PLATE	—
12									8	800-0030-01		WELL NUT # 1/4-20	—
13									1	700-0048-01		BANJO	—
14									2	01-0441-01		MTG. BRKT.-BANJO	—
15									2	01-0442-01		SHOCK PAD	—
16									3	800-0167-01		WEATHER SEAL 1/4" x 1/2"	—
17									4	800-0190-01		SPACER, BRASS #BCL 5/8 LG	—

	USED ON		
-10	00-0046-20	-70	
-20		-80	
-30		-90	
-40			
-50		-60	

REV	ECO
A	0986
B	1356

TITLE

BANJO ASSY-
JASPER

		REV
A	00-0265	B

SHT 3 OF 3

A6.1-3

BISHOP GRAPHICS/ACCUPRESS
REORDER NO. A 9624

A7. Bird
Mech. Final

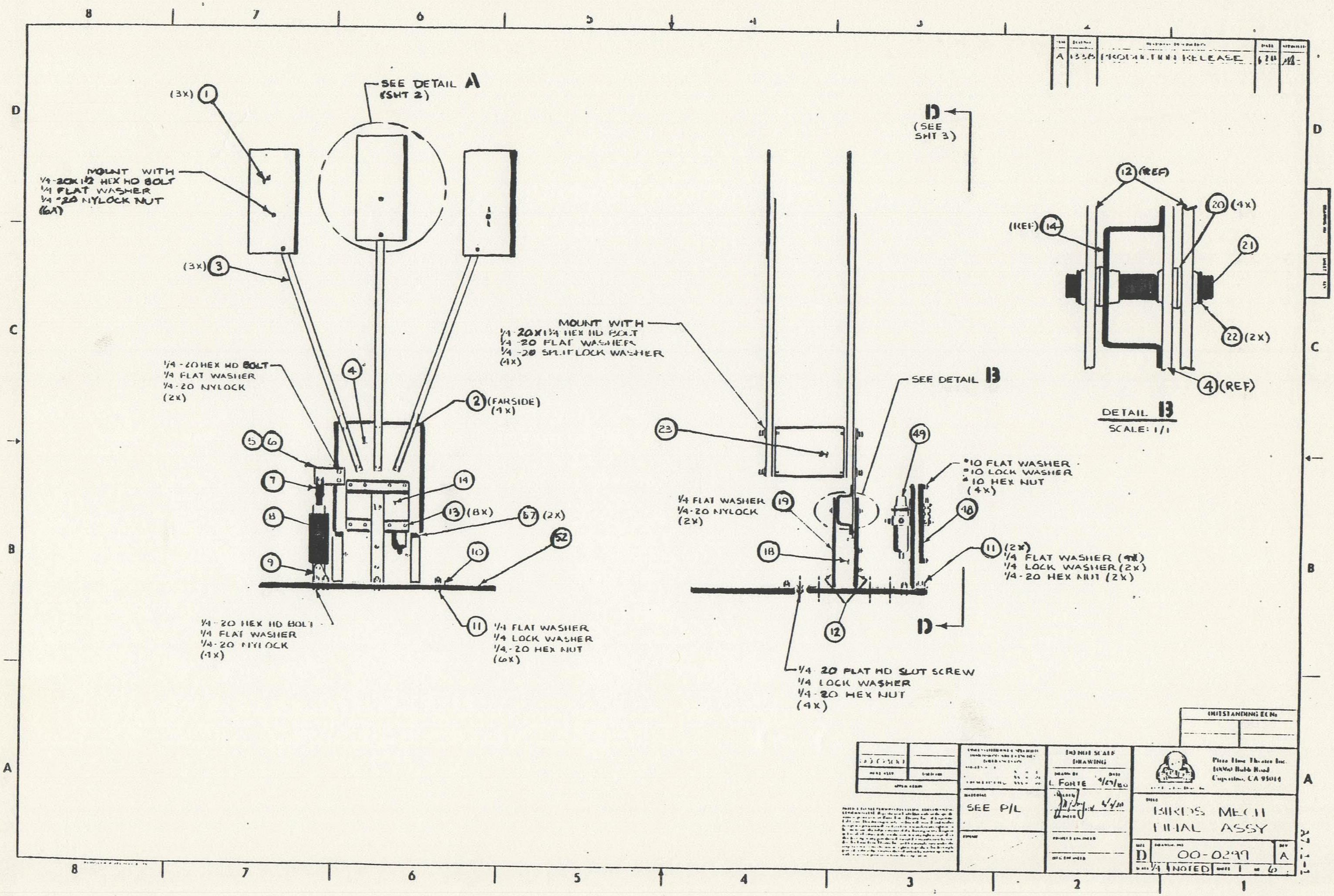
8
7
6
5
4
3
2
1
D
C
B
A
SEE DETAIL A
(SHT 2)
(3X) ①
MOUNT WITH
1/4-20X1 1/2 HEX HD BOLT
1/4 FLAT WASHER
1/4-20 NYLOCK NUT
(6X)
(3X) ③
④
② (FARSIDE)
(4X)
1/4-20 HEX HD BOLT
1/4 FLAT WASHER
1/4-20 NYLOCK
(2X)
⑤ ⑥
⑦
⑧
⑨
⑭
⑬ (8X)
(57) (2X)
(52)
⑩
1/4-20 HEX HD BOLT
1/4 FLAT WASHER
1/4-20 NYLOCK
(1X)
⑪ 1/4 FLAT WASHER
1/4 LOCK WASHER
1/4-20 HEX NUT
(6X)
D
(SEE
SHT 3)
MOUNT WITH
1/4-20X1 3/4 HEX HD BOLT
1/4-20 FLAT WASHER
1/4-20 SPLITLOCK WASHER
(4X)
㉓
SEE DETAIL B
1/4 FLAT WASHER
1/4-20 NYLOCK
(2X)
⑲
⑱
(49)
#10 FLAT WASHER
#10 LOCK WASHER
#10 HEX NUT
(4X)
⑱
⑪ (2X)
1/4 FLAT WASHER (4X)
1/4 LOCK WASHER (2X)
1/4-20 HEX NUT (2X)
⑫
D
1/4-20 FLAT HD SLOT SCREW
1/4 LOCK WASHER
1/4-20 HEX NUT
(4X)
⑫ (REF)
(REF) ⑭
⑳ (4X)
㉑
㉒ (2X)
④ (REF)
DETAIL B
SCALE: 1/1

A	1336	PRODUCTION RELEASE	6/24	[illegible]

OUTSTANDING ECNs

SEE P/L

DO NOT SCALE DRAWING

L. FORTE 4/27/80

4/4/80

Pizza Time Theatre Inc.
[illegible] Bubb Road
Cupertino, CA 95014

BIRDS MECH
FINAL ASSY

D | 00-0297 | A

1/4 NOTED 1 of 6

A7-1-1

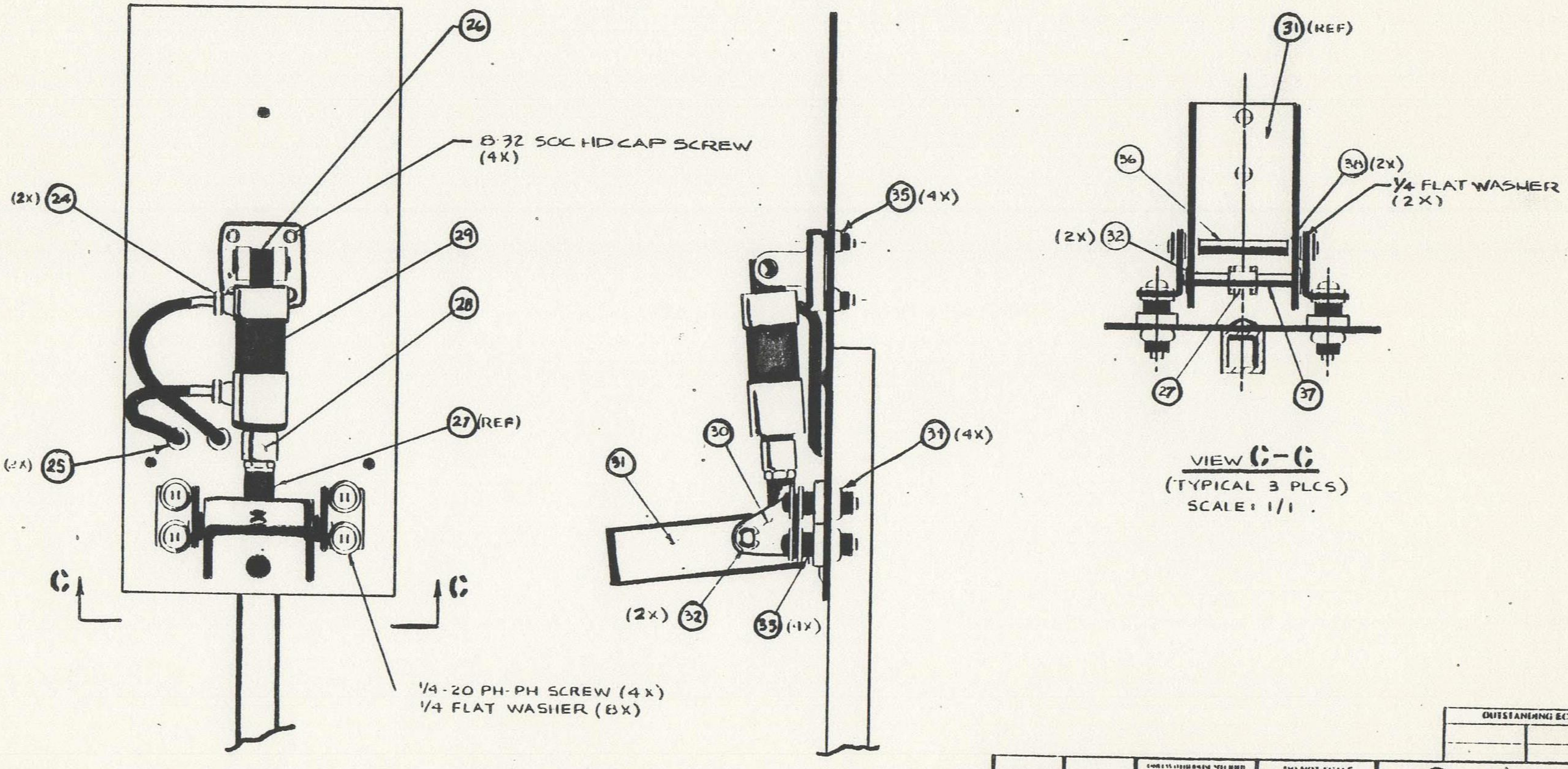

26
8-32 SOC HD CAP SCREW (4X)
(2X) 24
29
28
27 (REF)
(2X) 25
C
C
1/4-20 PH-PH SCREW (4X)
1/4 FLAT WASHER (8X)
35 (4X)
30
31
31 (4X)
(2X) 32
33 (4X)
31 (REF)
36
34 (2X)
1/4 FLAT WASHER (2X)
(2X) 32
27
37

VIEW C-C
(TYPICAL 3 PLCS)
SCALE: 1/1

DETAIL A (SEE SHT 1)
(TYPICAL 3 PLCS)
SCALE: 1/1

OUTSTANDING ECNs

00 0200

DO NOT SCALE DRAWING

SEE P/L

Pizza Time Theatre Inc.
10060 Bubb Road
Cupertino, CA 95014

BIRDS MECH.
FINAL ASSY

D 00 0299 A

FULL 2 of 6

A7.1-2

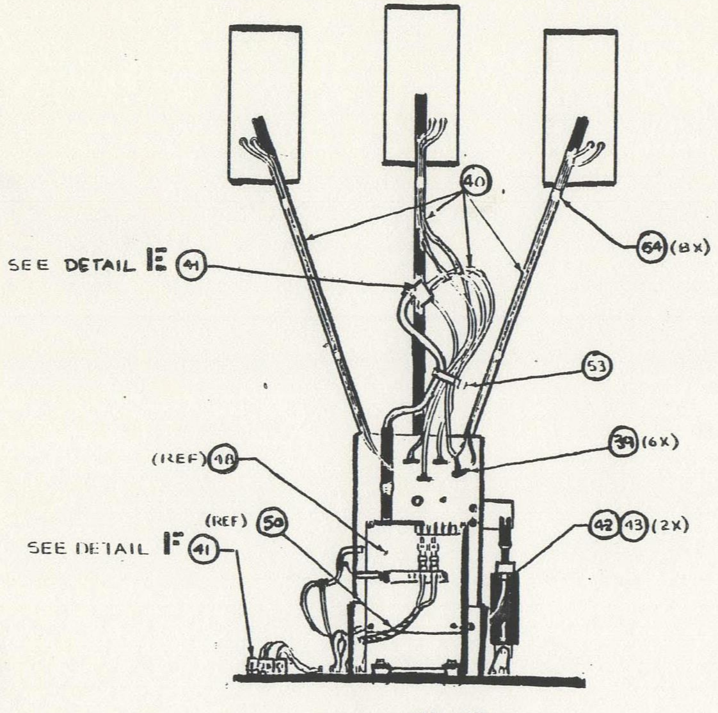
40
64 (8X)
SEE DETAIL E 41
53
39 (6X)
(REF) 48
(REF) 50
SEE DETAIL F 41
42 43 (2X)

VIEW D-D
(SEE SHT 1)

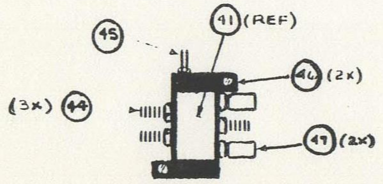
45
41 (REF)
46 (2X)
(3X) 44
47 (2X)

DETAIL E
SCALE: 1/1

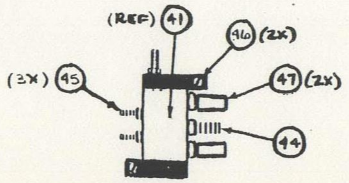
(REF) 41
46 (2X)
(3X) 45
47 (2X)
44

DETAIL F
SCALE: 1/1

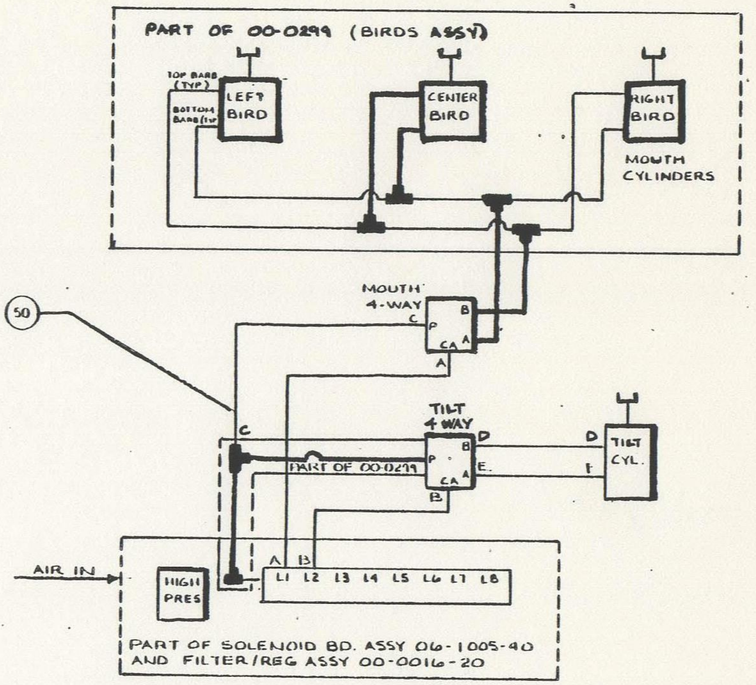
PART OF 00-0299 (BIRDS ASSY)
TOP BARB (TYP)
BOTTOM BARB (TYP)
LEFT BIRD
CENTER BIRD
RIGHT BIRD
MOUTH CYLINDERS
MOUTH 4-WAY
B
C
P
CA
A
50
TILT 4 WAY
D
E
PART OF 00-0299
TILT CYL.
AIR IN
HIGH PRES
L1 L2 L3 L4 L5 L6 L7 L8
PART OF SOLENOID BD. ASSY 06-1005-40
AND FILTER/REG ASSY 00-0016-20

AIRLINE ASSY SCHEMATIC

OUTSTANDING ECNs

00-0299

DO NOT SCALE DRAWING

DRAWN BY L FORTE DATE 4/30/80

MATERIAL SEE P/L

Pizza Time Theatre Inc.
10060 Bubb Road
Cupertino, CA 95014

TITLE BIRDS MECH. FINAL ASSY

SIZE D DRAWING NO. 00-0299 REV A

SCALE 1/4 NOTED SHEET 3 of 6

LIST OF MATERIALS

Chuck E. Cheese's Pizza Time Theatre

	REV
00-0299	A

ITEM	90	80	70	60	50	40	30	20	10	PART NUMBER	REFERENCE	DESCRIPTION	L/M
1									3	01-0078-01		HEAD PLATE	–
2									4	800-0089-01		DRIVE 1/4 OD X 1" GR	–
3									3	01-0080-01		BODY TUBE	–
4									1	01-0079-01		BODY MOUNT PLATE	–
5									1	01-0084-01		BRACKET BIRD DRIVE	–
6									1	680-0029-01		BEARING STRAIGHT 3/8 ID x 1/2 OD	–
7									1	650-0026-01		CLEVIS ROD	–
8									1	600-0015-01		CYLINDER	–
9									1PR	650-0025-01		PIVOT BRKT	–
10									1	01-0085-01		MOUNT PLATE	–
11									8	800-0055-01		CARRIAGE BOLT 1/4-20X1"	–
12									2	01-0196-01		BODY SUPPORT	–
13									8	800-0034-01		DRIVE RIVET 3/16 OD x 5/16 GR	–
14									1	01-0191-01		HAT SECTION	–
15													
16													
17													
18									1	01-0198-01		SUPPORT BLOCK	–
19									2	800-0114-01		FH SLOTTED - 1/4-20x3 1/2"	–
20									4	680-0033-01		BEARING FLANGE 5/8 ID	–
21									1	01-0081-01		PIVOT PIN	–
22									2	800-0085-01		"E" RING 5/8" SHAFT	–
23									1	01-0526-01		BRACKET SUPPORT BIRDS	–

	USED ON		
-10	00-0300	-60	
-20		-70	
-30		-80	
-40		-90	
-50			

ECO	REV
1338	A

TITLE

BIRDS MECH
FINAL ASSY

		REV
A	00-0299	A

SHT 4 OF 6

A7.1-4

BISHOP GRAPHICS/ACCUPRESS
REORDER NO. A 9624

LIST OF MATERIALS

REV
00-0299 A

ITEM	90	80	70	60	50	40	30	20	10	PART NUMBER	REFERENCE	DESCRIPTION	L/M
47									4	630-0003-01		AIR MUFFLER	–
48									1	06-1005-40		SOLENOID PCB ASSY	YES
49									1	00-0016-20		FILTER REG ASSY	YES
50									1	00-0092-10		AIRLINE ASSY	YES
51													
52									1	01-0331-01		CHAR. MTG. BOARD	–
53									1	760-0007-01		TIE WRAP - MIN.	–
54									8	760-0021-01		ADJUSTABLE CABLE TIE DOWN	–
55													
56													
57									2	01-0297-01		SOUND DAMPER	–

	USED ON		
		-60	
-10		-70	
-20		-80	
-30		-90	
-40			
-50			

REV

ECO

TITLE

BIRDS MECH
FINAL ASSY

REV
A 00-0299 A

SHT 6 OF 6

A7.1-6

BISHOP GRAPHICS/ACCUPRESS
REORDER NO. A 9624

A8. Drum Board

[illegible]	ECN NO	REVISION DESCRIPTION	DATE	APPROVED
H	1012	ADD 01-0474, CYMBOL STAND		
I	1083	ADD 760-0002, SPADE LUG		
J	1112	DELETE TERM BLK, ADD WIRING DIAGRAM		
K	1116	DELETE PTT P/N 800-0048 AND ADD 01-0912		

[illegible]	[illegible]	[illegible]	DATE	APPROVED
A	0470	PRODUCTION RELEASE		
B	0573	UPDATE L/M SEE ECO		
C	0515	ADD ITEM 13 & 14		
D	0750	ADD TERM BLK AND PAN MECH		
E	0769	QTY [illegible] BOLT		
F	0857	DELETE 650-0024, BARB		
G	1007	ADDED NOTE [3]		

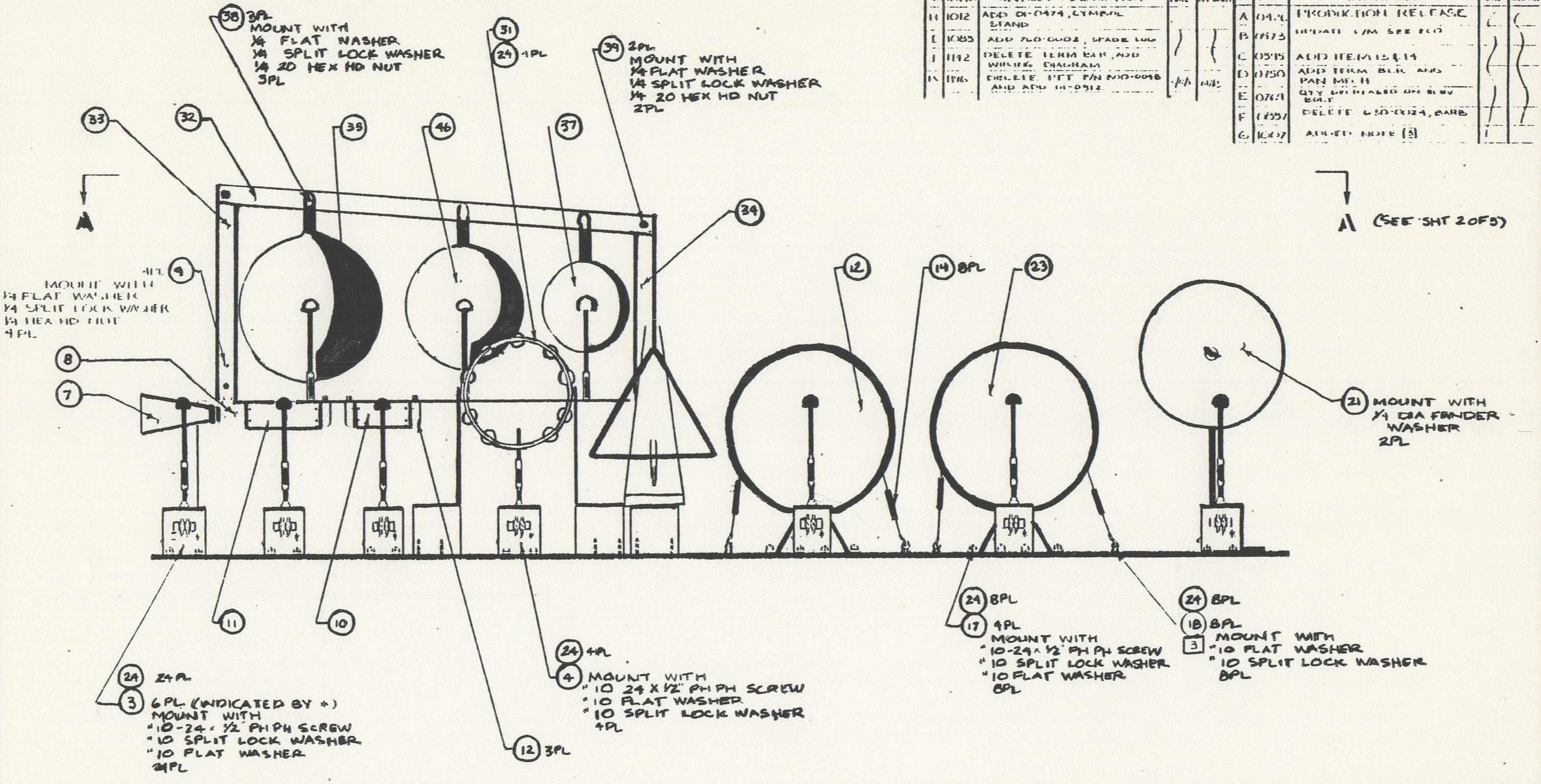

A
A (SEE SHT 2 OF 5)
38 3PL MOUNT WITH 1/4 FLAT WASHER 1/4 SPLIT LOCK WASHER 1/4 20 HEX HD NUT 3PL
31
24 4PL
39 2PL MOUNT WITH 1/4 FLAT WASHER 1/4 SPLIT LOCK WASHER 1/4 20 HEX HD NUT 2PL
33
32
35
46
37
34
9 4PL MOUNT WITH 1/4 FLAT WASHER 1/4 SPLIT LOCK WASHER 1/4 HEX HD NUT 4PL
8
7
12
14 8PL
23
21 MOUNT WITH 1/4 DIA FENDER WASHER 2PL
11
10
24 24PL
3 6PL (INDICATED BY *) MOUNT WITH #10-24 x 1/2 PH PH SCREW #10 SPLIT LOCK WASHER #10 FLAT WASHER 24PL
12 3PL
24 4PL
4 MOUNT WITH #10 24 X 1/2" PH PH SCREW #10 FLAT WASHER #10 SPLIT LOCK WASHER 4PL
24 8PL
17 4PL MOUNT WITH #10-24 x 1/2 PH PH SCREW #10 SPLIT LOCK WASHER #10 FLAT WASHER 8PL
24 8PL
18 8PL
3 MOUNT WITH #10 FLAT WASHER #10 SPLIT LOCK WASHER 8PL

NOTES:

1. WHEN BOLT OR SCREW LENGTHS SPECIFIED ARE NOT AVAILABLE USE NEXT AVAILABLE SIZE SO THAT FROM 1 1/2 TO 6 THREADS REMAIN EXPOSED AFTER MOUNTING NUTS ARE TIGHTENED, IN ORDER TO PASS INSPECTION (3 THREADS SHOWING BE INC THE AMOUNT DESIRED)
2. SEE SHT 3 OF 5 FOR WIRING DIAGRAM OF 00-0056-10 DRUM CABLE ASSY (ITEM 26)
3. ITEM 18 #10-24 EYEBOLTS TO BE CUT TO 1.25 LONG, BEFORE INSTALLATION

OUTSTANDING ECNs

00 0123
00-0233

DO NOT SCALE DRAWING

DRAWN BY: ADAMS, D — DATE: 5/7/82
CHECKED: L Fortie — 9/12/82

MATERIAL: SEE L/M

Pizza Time Theatre Inc
1213 Innsbruck Dr
Sunnyvale, CA 94086

TITLE: DRUM BOARD ASSEMBLY

SIZE: D — DRAWING NO: 00-0050 — REV: K
SCALE: 1/4 — SHEET 1 OF 5

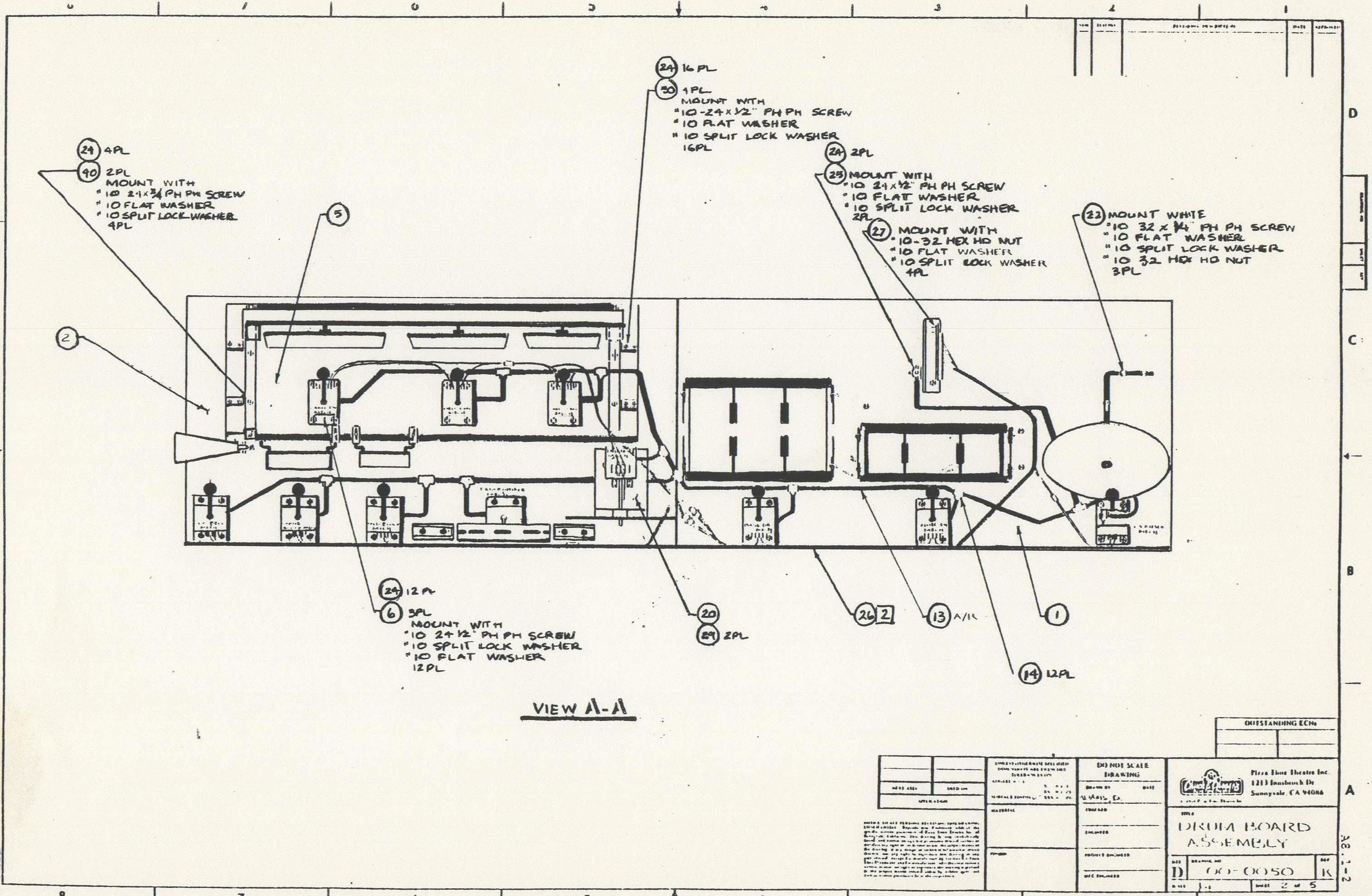

D
C
B
A
8
7
6
5
4
3
2
1
24 16 PL
30 4PL
MOUNT WITH
#10-24x1/2" PH PH SCREW
#10 FLAT WASHER
#10 SPLIT LOCK WASHER
16PL
24 4PL
40 2PL
MOUNT WITH
#10 24x3/4 PH PH SCREW
#10 FLAT WASHER
#10 SPLIT LOCK WASHER
4PL
5
24 2PL
25 MOUNT WITH
#10 24x1/2" PH PH SCREW
#10 FLAT WASHER
#10 SPLIT LOCK WASHER
2PL
27 MOUNT WITH
#10-32 HEX HD NUT
#10 FLAT WASHER
#10 SPLIT LOCK WASHER
4PL
22 MOUNT WHITE
#10 32 x 3/4" PH PH SCREW
#10 FLAT WASHER
#10 SPLIT LOCK WASHER
#10 32 HEX HD NUT
3PL
2
24 12 PL
6 3PL
MOUNT WITH
#10 24x1/2" PH PH SCREW
#10 SPLIT LOCK WASHER
#10 FLAT WASHER
12PL
20
29 2PL
26 2
13 A/R
1
14 12PL
OUTSTANDING ECNs

VIEW A-A

DO NOT SCALE DRAWING

Pizza Time Theatre Inc.
1213 Innsbruck Dr.
Sunnyvale, CA 94086

DRUM BOARD ASSEMBLY

D 00-0050 K

2 of 5

A8 1-2

LIST OF MATERIALS

Chuck E. Cheese's Pizza Time Theatre

	REV
00-0050	K

ITEM	90	80	70	60	50	40	30	20	10	PART NUMBER	REFERENCE	DESCRIPTION	L/M
1									1	01-0119-01		DRUM SHELF-RIGHT	—
2									1	01-0125-01		DRUM SHELF-LEFT	—
3									6	00-0002-10		D.T.T. MECH ASSY (DRUM)	YES
4									1	00-0002-20		D.T.T. MECH. ASSY (TAMB.)	YES
5									1	01-0130-01		BELL & BLOCK STAND	—
6									3	00-0002-40		D.T.T. MECH ASSY (PAN)	YES
7									1	700-0018-01		COWBELL	—
8									1	700-0034-01		BELL & BLOCK HOLDER	—
9									4	800-0055-01		CARRIAGE BOLT 1/4-20×1"	—
10									1	700-0015-01		CB BLOCK-MED.	—
11									1	700-0016-01		CB. BLOCK-LRG.	—
12									3	700-0035-01		BLOCK HOLDER	—
13									A/R	740-0001-01		TUBING 1/4"OD × 1/8"ID	—
14									12	630-0005-01		AIR TEE 1/8"	—
15													
16									1	700-0012-01		BASS DRUM	—
17									2	800-0027-01	(PAIR)	MTG: BASE BRKT.	—
18									8	800-0023-01		#10-24 EYEBOLT	—
19									8	800-0040-01		TURN BUCKLE	—
20									1	00-0024-10		TRIANGLE ASSY	YES
21									1	700-0014-01		CYMBOL	—
22									1	01-0474-01		CYMBOL STAND	—
23									1	700-0013-01		SNARE DRUM	—

	USED ON		
-10	00-0123 00-0233	-70	
-20		-80	
-30		-90	
-40			
-50			
		-60	

REV	A	B	C	D	E	F	G	I	H	J	K
ECO	0426	0573	0595	0750	0769	0857	1007	1012	1085	1142	1196

TITLE

DRUM BOARD ASSEMBLY

		REV
A	00-0050	K

SHT 4 OF 5

A8.1-4

BISHOP GRAPHICS/ACCUPRESS
REORDER NO A 9624

LIST OF MATERIALS

Chuck E. Cheese's Pizza Time Theatre

REV

00-0050 | K

ITEM	90	80	70	60	50	40	30	20	10	PART NUMBER	REFERENCE	DESCRIPTION	L/M
24									76	800-0041-01		'T' NUT #10-24	—
25									1	00-0016-20		FILTER/REG ASSY	YES
26									1	00-0056-10		DRUM CABLE ASSY	YES
27									1	06-0005-50		SOLENOID BD. ASSY	YES
28									2	800-0039-01		4MM x 16MM PH. PAN. HD	—
29									6	800-0044-01		#12 x 2" WOOD SCREW	—
30									4	01-0512-01		MTG BRACKET-DRUM SHELF	—
31									1	00-0027-10		TAMBORINE ASSY	YES
32									1	01-0134-01		HORIZ. PAN SUPPORT	—
33									1	01-0135-01		VERT. PAN SUPPORT	—
34									1	01-0135-02		VERT. PAN SUPPORT	—
35									1	700-0023-01		LARGE PAN	—
36									1	700-0022-01		MEDIUM PAN	—
37									1	700-0021-01		SMALL PAN	—
38									3	800-0087-01		ELEVATOR BOLT	—
39									2	800-0051-01		3½" CARRIAGE BOLT	—
40									2	800-0042-01		10"x10" ANGLE	—

	USED ON		
		-60	
-10		-70	
-20		-80	
-30		-90	
-40			
-50			

REV

ECO

TITLE

DRUM BOARD ASSEMBLY

REV

A 00-0050-K

SHT 5 OF 5

A8.1-5

BISHOP GRAPHICS/ACCUPRESS
REORDER NO. A 9624

D	0198	DELETED 630-0057 & REPLACED WITH 630-0083. REL-RAVIN		JW
E	0750	-40 VERSION ADDED & FLAT WASHER ADDED TO TOP OF SWITCH		ell
F	1217	DELETED 570-0001		MC

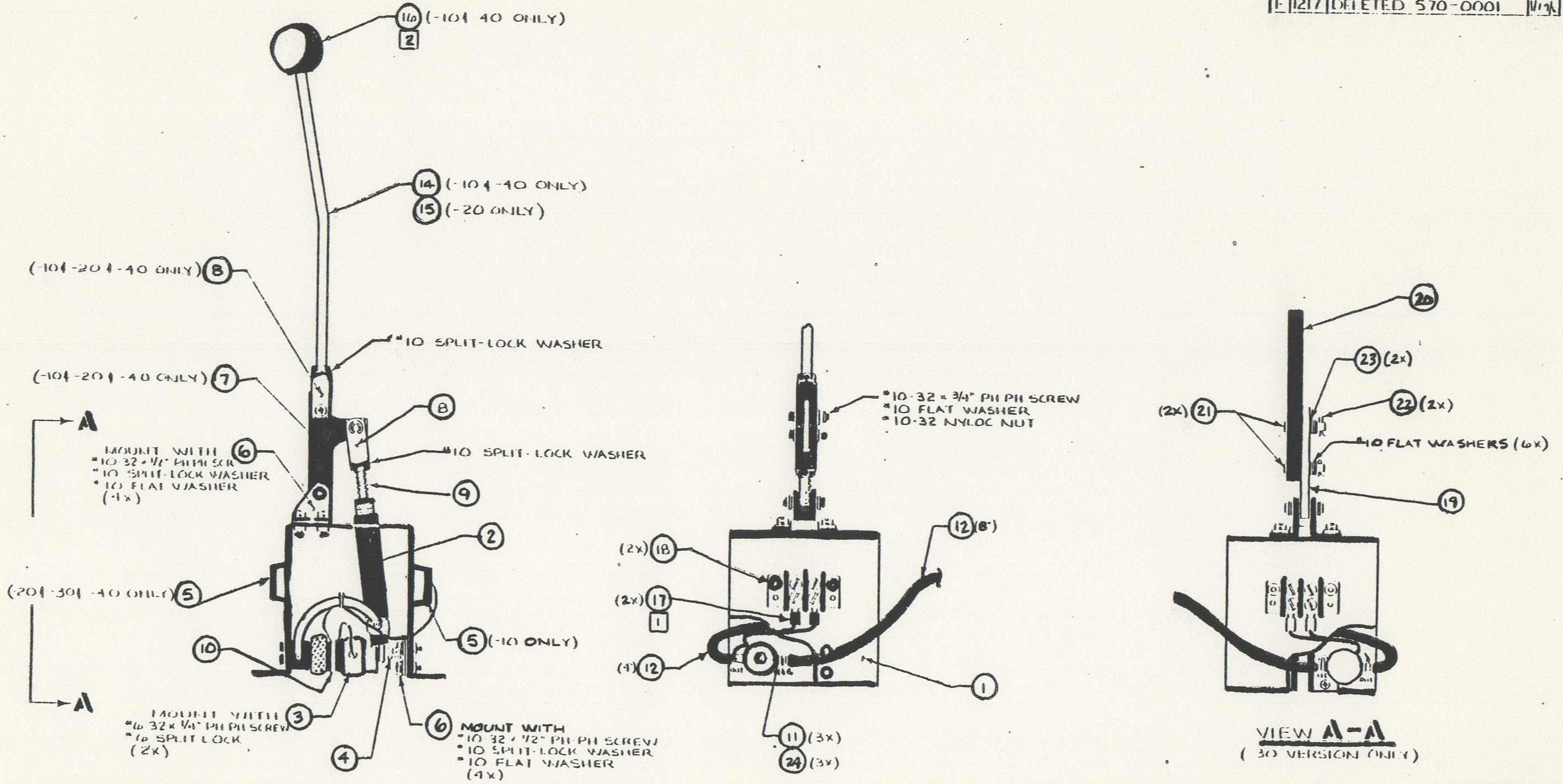

16 (-10 & 40 ONLY)
2
14 (-10 & -40 ONLY)
15 (-20 ONLY)
(-10 & -20 & -40 ONLY) 8
#10 SPLIT-LOCK WASHER
(-10 & -20 & -40 ONLY) 7
8
#10 SPLIT-LOCK WASHER
A
MOUNT WITH #10-32 × 1/2" PH PH SCR. #10 SPLIT-LOCK WASHER #10 FLAT WASHER (4x) 6
9
2
(-20 & -30 & -40 ONLY) 5
5 (-10 ONLY)
10
A
MOUNT WITH #6-32 × 1/4" PH PH SCREW #6 SPLIT LOCK (2x) 3
4
6 MOUNT WITH #10-32 × 1/2" PH PH SCREW #10 SPLIT-LOCK WASHER #10 FLAT WASHER (4x)
#10-32 × 3/4" PH PH SCREW #10 FLAT WASHER #10-32 NYLOC NUT
(2x) 18
(2x) 17
1
12 (8")
(4") 12
1
11 (3x)
24 (3x)
20
23 (2x)
(2x) 21
22 (2x)
#10 FLAT WASHERS (6x)
19
VIEW A-A
(30 VERSION ONLY)

NOTES:

1. CUT AND STRIP WIRE BEFORE CRIMPING WITH ITEM 17 (SPADE LUG)(2x)
2. APPLY EPOXY BEFORE MOUNTING BALL (ITEM 16) ON THREADED SHAFT (ITEM 14)
3. WHEN BOLT OR SCREW LENGTHS SPECIFIED ARE NOT AVAILABLE, USE NEXT AVAILABLE SIZE, SO THAT FROM 1½ TO 6 THREADS REMAIN EXPOSED AFTER MOUNTING NUTS ARE TIGHTENED, IN ORDER TO PASS INSPECTION (3 THREADS SHOWING BEING THE AMOUNT DESIRED.

OUTSTANDING ECNs

00 0050

MATERIAL SEE P/L

DO NOT SCALE DRAWING

DRAWN BY L. Forte DATE 6/31/0

Pizza Time Theatre Inc
1213 Innsbruck Dr
Sunnyvale, CA 94086

TITLE D.L.T. MECHANICAL ASSEMBLY

SIZE D DRAWING NO 00 0002 REV F

SCALE FULL SHEET 1 of 2

A3.2-1

LIST OF MATERIALS

CHUCK E. CHEESE'S PIZZA TIME THEATRE

	REV
00-0002-10-20-30	F

ITEM	90	80	70	60	50	40	30	20	10	PART NUMBER	REFERENCE	DESCRIPTION	L/M
1						1	1	1	1	01-0013-01		MOUNTING FRAME	—
2						1	1	1	1	600-0002-01		AIR CYLINDER	—
3						1	1	1	1	610-0001-01		AIR SOLENOID	—
4						1	1	1	1	630-0003-01		AIR MUFFLER	—
5						1	1	1	1	580-0001-01		TERM. BLOCK - 2 POS.	—
6						2	2	2	2	650-0005-01		PIVOT BRACKET (1 PAIR)	—
7						1	–	1	1	01-0011-01		DRUM LINKAGE	—
8						2	1	2	2	650-0004-01		CLEVIS #D-850	—
9						1	1	1	1	620-0002-01		SPRING #LC-032D	—
10						1	1	1	1	760-0001-01		TIE-WRAP	—
11						3	3	3	3	630-0001-01		BARB #10-32 TO 1/8" I.D. TUBE	—
12						12"	12"	12"	12"	740-0001-01		TUBING 1/4" OD x 1/8" ID	—
13													
14						1	–	–	1	01-0014-01		ROD STRIKER	—
15						–	–	1	–	01-0014-02		ROD STRIKER - FORESHORTEN	—
16						1	–	–	1	800-0007-01		BALL, STRIKER	—
17						2	2	2	2	760-0002-01		SPADE LUG #6 x #22 AWG.	—
18						2	2	2	2	800-0024-01		POP RIVET 1/8" DIA x 3/8" GR	—
19						–	1	–	–	01-0090-01		TRIANGLE LINKAGE	—
20						–	1	–	–	01-0091-01		TRIANGLE STRIKER	—
21						–	2	–	–	800-0026-01		CLEVIS PIN 3/16 DIA x 3/4" LG	—
22						–	2	–	–	800-0004-01		COTTER PIN	—
23						–	2	–	–	800-0025-01		NYLON WASHER #10	—

	USED ON	
-10	DRUM	-60
-20	TAMB.	-70
-30	TRIANGLE	-80
-40	PAN	-90
-50		

REV	B	C	D	E	F
ECO	0301	0412	0498	0750	1217

TITLE

D.T.T. MECH.
ASSEMBLY

		REV
A	00-0002-10-20-30	F

SHT 2 OF 3

BISHOP GRAPHICS/ACCUPRESS
REORDER NO. A 9624

LIST OF MATERIALS

CHUCK E. CHEESE'S PIZZA TIME THEATRE

		REV
00	0002 -10 -20 -30	F

ITEM	90	80	70	60	50	40	30	20	10	PART NUMBER	REFERENCE	DESCRIPTION	L/M
24						3	3	3	3	630-0033-01		WASHER, RUBBER #10	—

	USED ON		
		-60	
-10	00-0050-10	-70	
-20	00-0050-10	-80	
-30	00-0024-10	-90	
-40	00-0050-10		
-50			

REV

ECO

TITLE

D.T.T. MECH.

ASSEMBLY

			REV
A	00	0002 -10 -20 -30	F

SHT 3 OF 3

BISHOP GRAPHICS/ACCUPRESS
REORDER NO. A 9624

REV	ECN NO	REVISION DESCRIPTION	DATE	APPROVED
A	0216	MISCELLANEOUS CHANGES	2-2-77	[illegible]
B	0545	DELETED ITEMS 3,4,9,10,11, AND 14. REVISED NOTE 1.	[illegible]	[illegible]

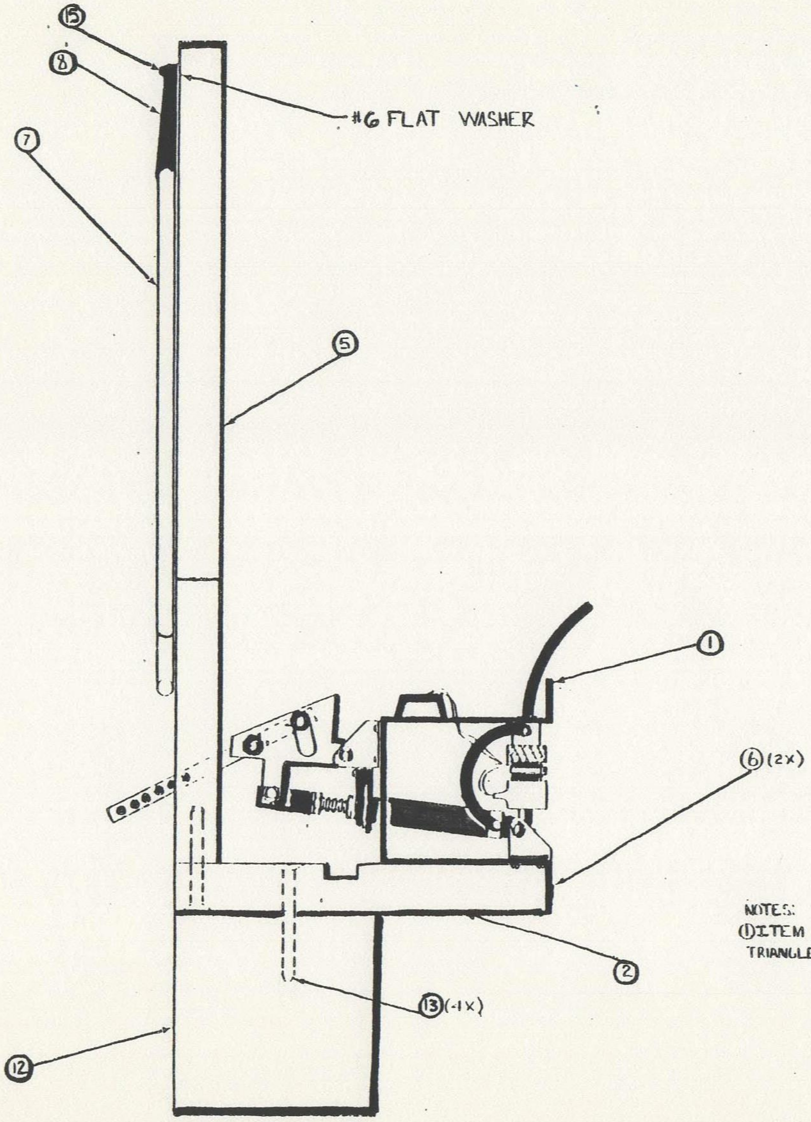

NOTES:
① ITEM # 8 TIE WRAP CENTER TO TRIANGLE CENTER, TO BE 2"

00 0050	
NEXT ASSY	USED ON
APPLICATION	

DO NOT SCALE DRAWING

DRAWN BY J.T. M. DATE [illegible]

CHECKED

ENGINEER

OUTSTANDING ECNs

Pizza Time Theatre Inc.
10060 Bubb Road
Cupertino, CA 95014

TITLE
ASSEMBLY
TRIANGLE STAND

SIZE	DRAWING NO	REV
D	00 0024	B

SCALE FULL SHEET 1 of 2

LIST OF MATERIALS

CHUCK E. CHEESE'S PIZZA TIME THEATRE

REV
00-0C .4 | B

ITEM	90	80	70	60	50	40	30	20	10	PART NUMBER	REFERENCE	DESCRIPTION	L/M
1									1	00-0002-30		DRUM MECH. ASSY	YES
2									1	01-0089-		TRIANGLE STAND-HORIZ.	—
3													
4													
5									1	01-0092-		TRIANGLE STAND-VERT.	—
6									2	800-0045-		#10 x 2" WOOD SCREW	—
7									1	700-0019-		TRIANGLE	—
8									1	760-0005-		#6 TIE WRAP	—
9													
10													
11													
12									1	01-0105-		TRIANGLE SUPPORT	—
13									4	800-0044		#12 x 2" WOOD SCREW	—
14													
15									1	800-0093-		#6 x 1" TAP SCREW	—

	USED ON		
		-60	
-10	00-0050	-70	
-20		-80	
-30		-90	
-40			
-50			

ECO	REV
0216	A
0545	B

TITLE

TRIANGLE
STAND ASSY

REV
A | 00-0024 | B

SHT 2 OF 2

A8.3-2

BISHOP GRAPHICS/ACCUPRESS
REORDER NO. A 9624

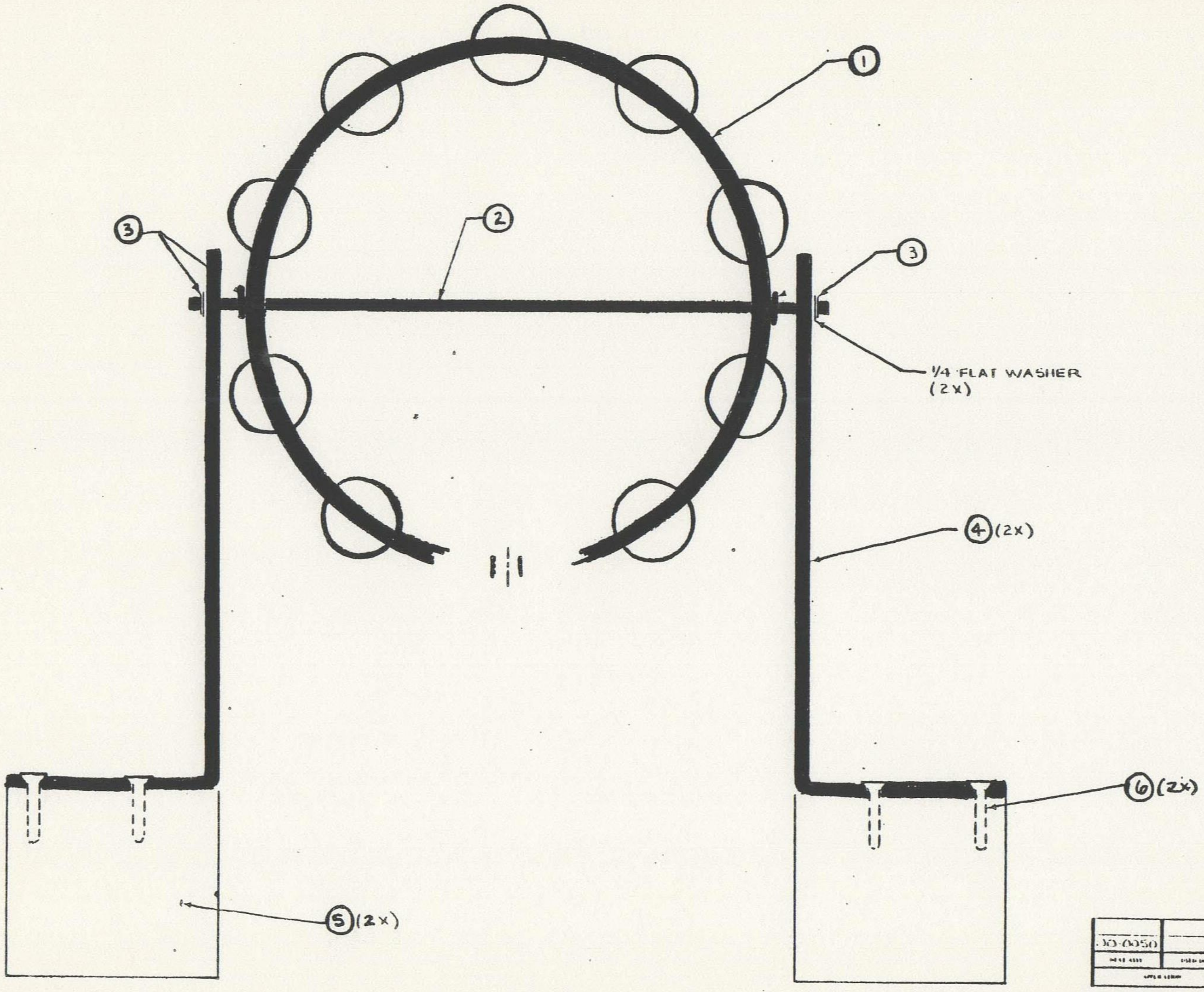
①
②
③
③
1/4 FLAT WASHER
(2X)
④(2X)
⑤(2X)
⑥(2X)

A	0541	DELETED ITEM 7 · SPACER RELEASED ASSY DRWG	4/25/	JJ

OUTSTANDING ECNs

00-0050

DO NOT SCALE DRAWING

L.FORTE 8/26/80

MATERIAL SEE P/L

Pizza Time Theatre Inc
1213 Innsbruck Dr
Sunnyvale, CA 94086

TAMBORINE
ASSY

D 00-0027 A

FULL 1 of 2

A3.4.

LIST OF MATERIALS

CHUCK E. CHEESE'S PIZZA TIME THEATRE

	REV
00-0027	A

ITEM	90	80	70	60	50	40	30	20	10	PART NUMBER	REFERENCE	DESCRIPTION	L/M	
1									1	01-0128		TAMBORINE FAB.	—	✓
2									1	01-0129		TAMBORINE ROD	—	
3									4	800-0015		"E"-RING 1/4" SHAFT	—	
4									2	01-0126		ANGLE SUPPORT	—	✓
5									2	01-0127		TAMB. SUPPORT BLOCK	—	✓
6									4	800-0043		#12 x 1" WOOD SCREW	—	✓

	USED ON		
-10	00-0050	-60	
-20		-70	
-30		-80	
-40		-90	
-50			

ECO 0547 REV A

TITLE

TAMBORINE ASSEMBLY

		REV
A	00-0027	A

SHT 2 OF 2

A8.4-2

BISHOP GRAPHICS/ACCUPRESS
REORDER NO A 9624

A9. Applause Board

REV	ECO NO	REVISION DESCRIPTION	DATE	APPROVED
1	0514	UPDATE [illegible] ASSY DWG [illegible] PLATE [illegible]		
6	1138	OBSOLETE [illegible]-0054 TO VERSION	[illegible]	B/I

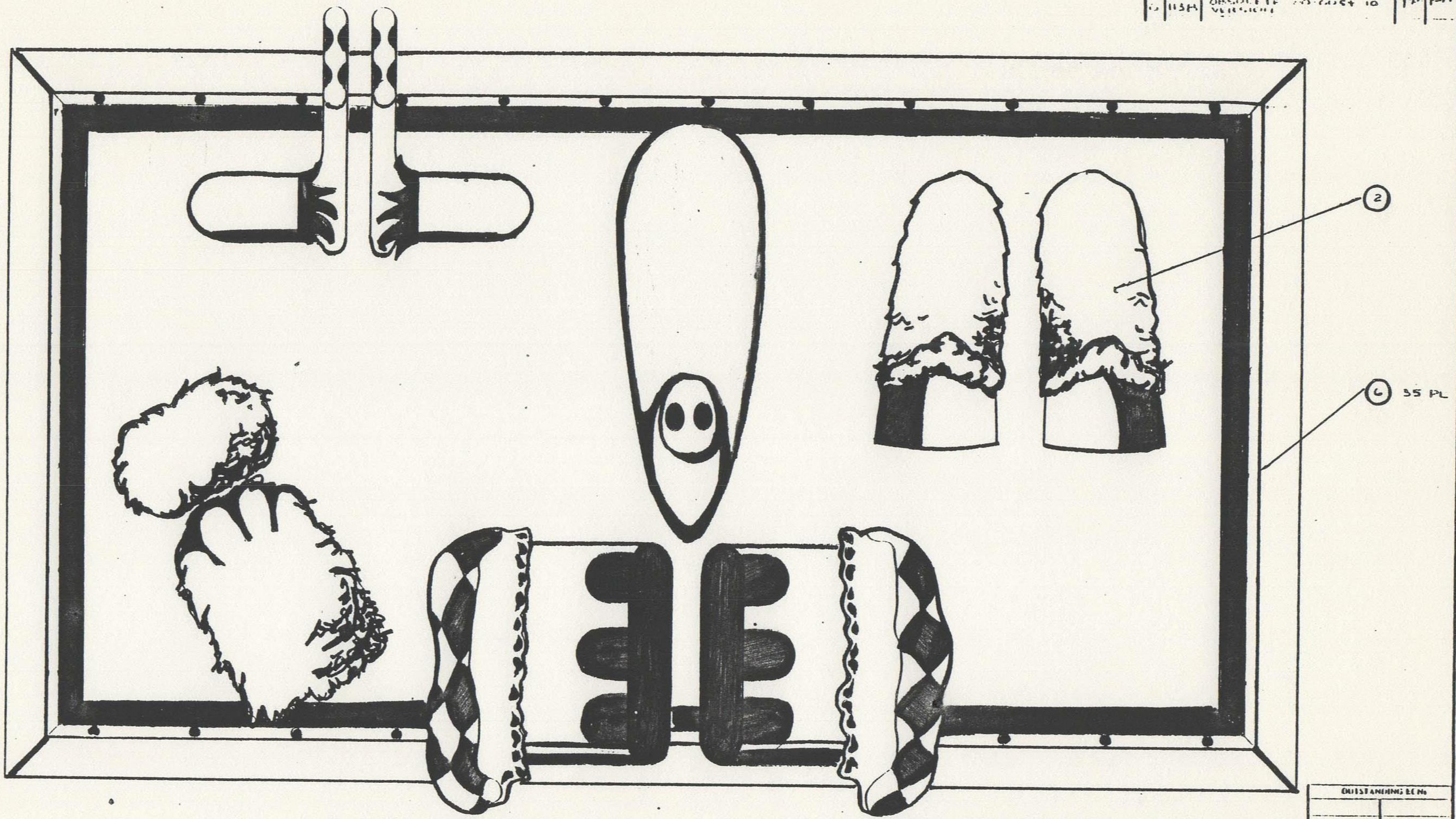

FRONT VIEW
(20 VERSION ONLY)

NOTES:

[1] WHEN BOLT OR SCREW LENGTHS SPECIFIED ARE NOT AVAILABLE, USE NEXT AVAILABLE SIZE SO THAT FROM 1½ TO [illegible] THREADS REMAIN EXPOSED AFTER NUTS ARE TIGHTENED, IN ORDER TO PASS INSPECTION. BOLTS & THREADS SHOWN BEING THE AMOUNT DESIRED

[2] USE [illegible] LABELS TO IDENTIFY TERMINAL BLOCKS.

OUTSTANDING ECNs

NEXT ASSY	USED ON
00-0253	00-0273
APPLICATION	

DO NOT SCALE DRAWING

DRAWN BY	D. ADAMS
DATE	[illegible]
CHECKED	L. FORTE 3/4/82
MATERIAL	SEE I/M
TITLE	APPLAUSE BOARD FINAL ASSY
SIZE	D
DRAWING NO	00 0054
REV	6
SCALE	1/2
SHEET	1 of 3

Pizza Time Theatre Inc.
1213 Innsbruck Dr
Sunnyvale, CA 94086

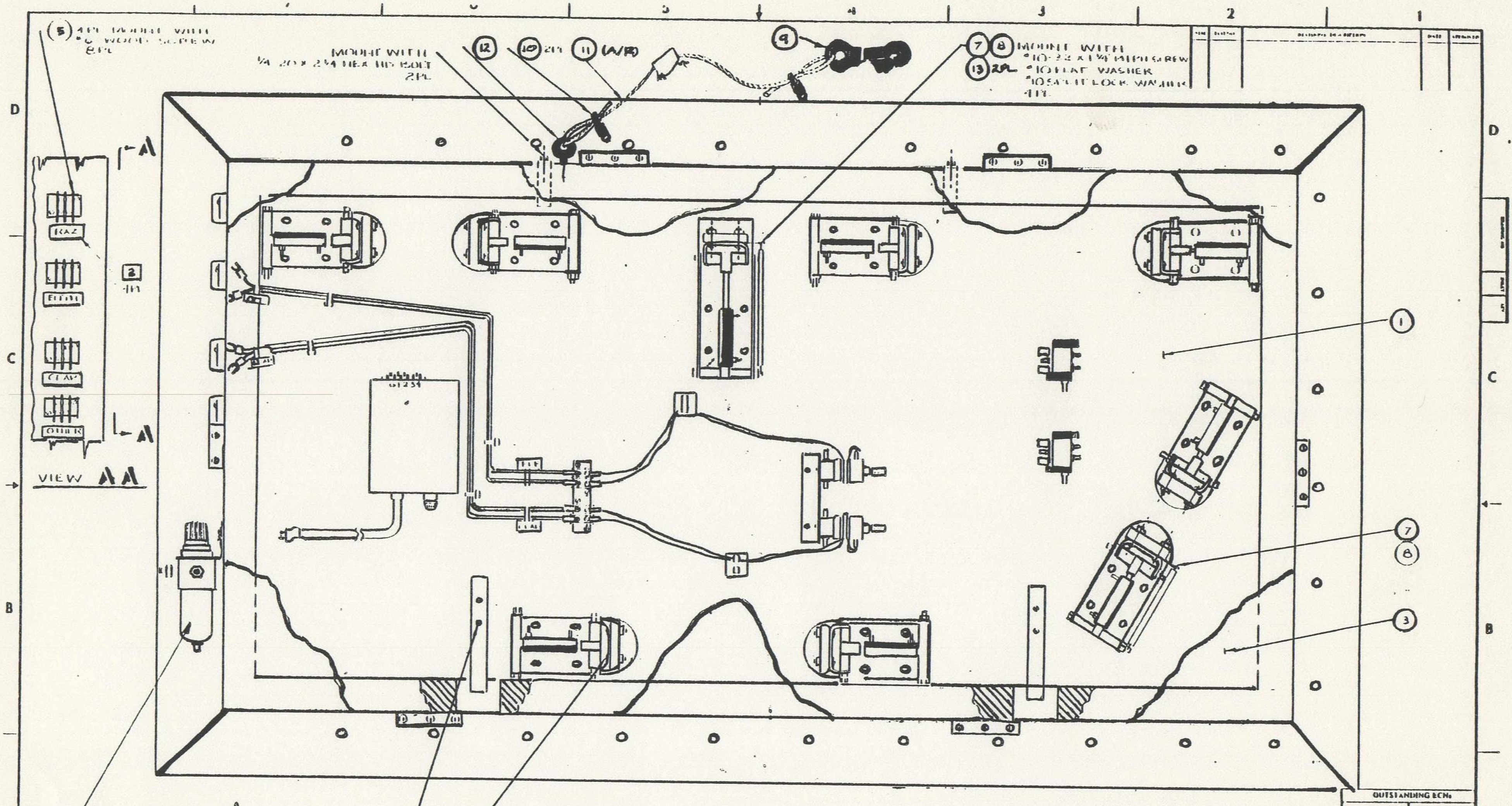
(5) 4PL MOUNT WITH
#6 WOOD SCREW
8PL
MOUNT WITH
1/4-20 x 2 3/4 HEX HD BOLT
2PL
12
10 2PL
11 (W/F)
9
7 8 MOUNT WITH
#10-32 x 1 1/4 PHPH SCREW
13 2PL #10 FLAT WASHER
#10 SPLIT LOCK WASHER
4PL
RAZ
ECHO
CLAP
OTHER
2
4PL
A
A
VIEW AA
1
7
8
3
D
C
B
A
8
7
6
5
4
3
2
1

REAR VIEW (.20 VERSION ONLY)

(4) MOUNT WITH
#10-24 x 5/8" PHPH SCREW
#10 FLAT WASHER
2PL

MOUNT WITH
#10-24 x 1/2" PHPH SCREW
#10 FLAT WASHER
#10 SPLIT LOCK WASHER
4PL

(B) 2PL
MOUNT WITH
#10-32 x 1" PHPH SCREW
#10 FLAT WASHER
#10 SPLIT LOCK WASHER
4PL

OUTSTANDING ECNs

DO NOT SCALE DRAWING

D. ADAMS 2/18/8

MATERIAL SEE L/M

Pizza Time Theatre Inc
1213 Innsbruck Dr
Sunnyvale, CA 94086

APPLAUSE BOARD
FINAL ASSY

D 00-0054 G

SHEET 2 OF 3

A9.1-2

LIST OF MATERIALS

Chuck E. Cheese's Pizza Time Theatre

REV

00-0054 G

ITEM	90	80	70	60	50	40	30	20	10	PART NUMBER	REFERENCE	DESCRIPTION	L/M
1								1		00-0122-20		MECH. FINAL ASSY-LT.	YES
2								1		00-0121-10		COSMETIC FINAL ASSY-LT.	YES
3								1		01-0182-01		BACK SUPPORT	—
4								1		00-0016-10		FILTER/REG ASSY	YES
5								4		580-0001-01		TERM BLK (2POS)	—
6								35		840-0002-01		BULB T 3¼ 6.3 VAC	—
7								2		01-0176-01		BRACKET, TRUNK SPRING	—
8								2		620-0003-01		SPRING	—
9								1		800-0112-01		3/4" SWIVEL SNAP BOLT	—
10								2		800-0078-01		LOOP SLEEVES #793-A	—
11								A/R		770-0014-01		1/8" STEEL CABLE	—
12								1		800-0072-01		1/4-20 EYEBOLT 2½" LG	—
13								9		001-0254-01		SUPPORT PLATE	—

	USED ON		
-10		-60	
-20	00-0123 00-0283	-70	
-30		-80	
-40		-90	
-50			

REV	A	B	C	D	E	F	G
ECO	0381	0383	0415	0476	0487	0594	1138

TITLE

APPLAUSE BOARD
FINAL ASSY

REV

A 00-0054 - G

SHT 3 OF 3

BISHOP GRAPHICS/ACCUPRESS
REORDER NO. A 9624

SYM	ECN NO.	DESCRIPTION OF CHANGE	DATE	APPROVED
A	0447	P/N 800-0048 WAS 3½" IS 4" LG	[illegible]	[illegible]
B	1158	OBSOLETE -10 VERSION	[illegible]	[illegible]
C	1251	[illegible]	[illegible]	MC

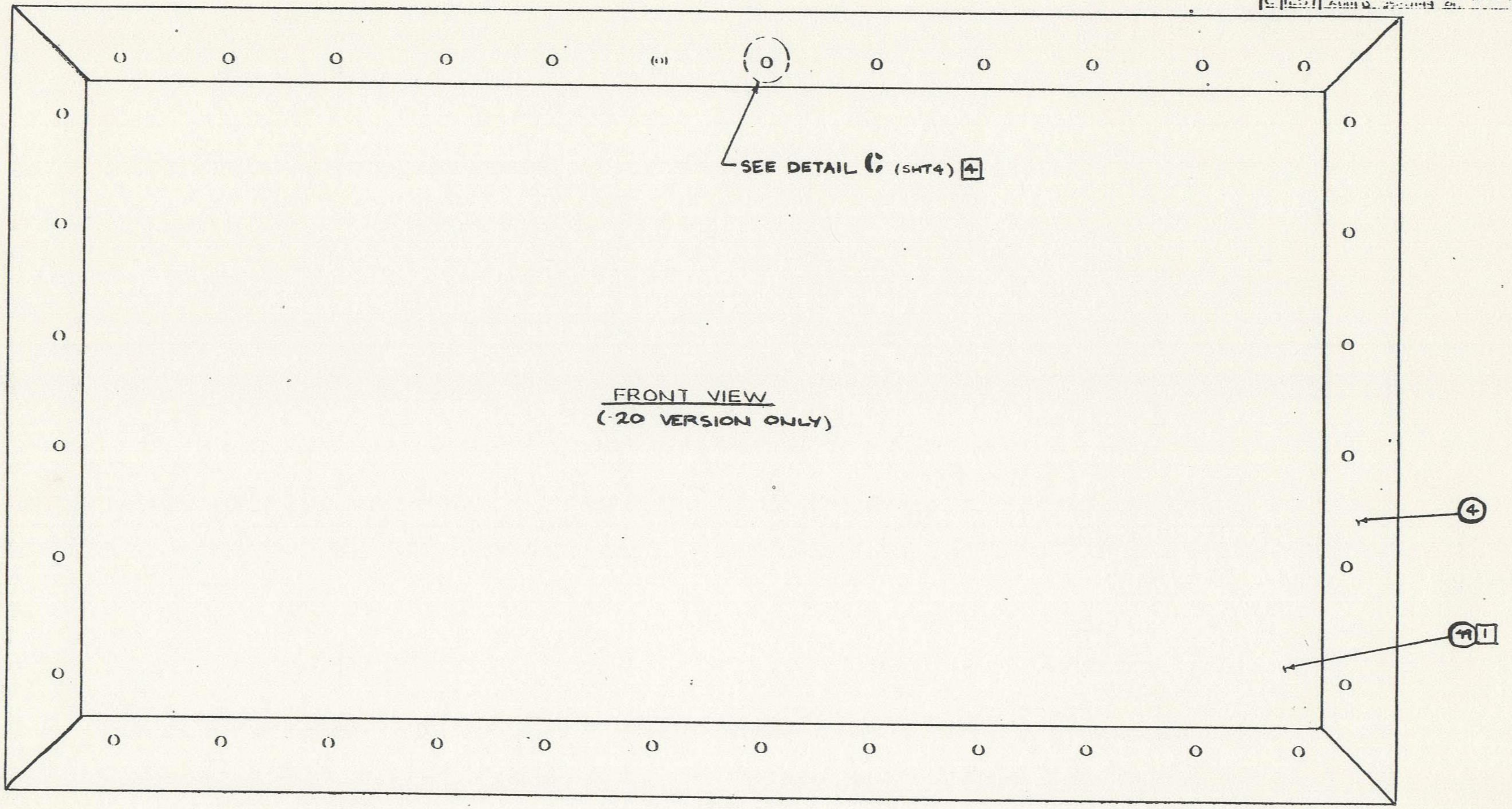

NOTES:
1 ATTACH FOAM USING STAPLE GUN
2 STAPLE DOWN SOCKET LEAD AND TIE WRAP AS SHOWN.
3
4 DO NOT INSTALL SOCKET IN THIS HOLE TO BE USED FOR PLACEMENT OF HEM

OO 0054	
NEXT ASSY	USED ON
APPLICATION	

MATERIAL
SEE L/M

DO NOT SCALE DRAWING
DRAWN BY L. FORTE DATE 6/10/80

Pizza Time Theatre Inc.
10060 Bubb Road
Cupertino, CA 95014

TITLE
APPLAUSE BOARD
MECH ASSY

SIZE D DWG NO. OO-0122 REV E
SCALE 1/2 & NOTED SHEET 3 of 5

39.2-1

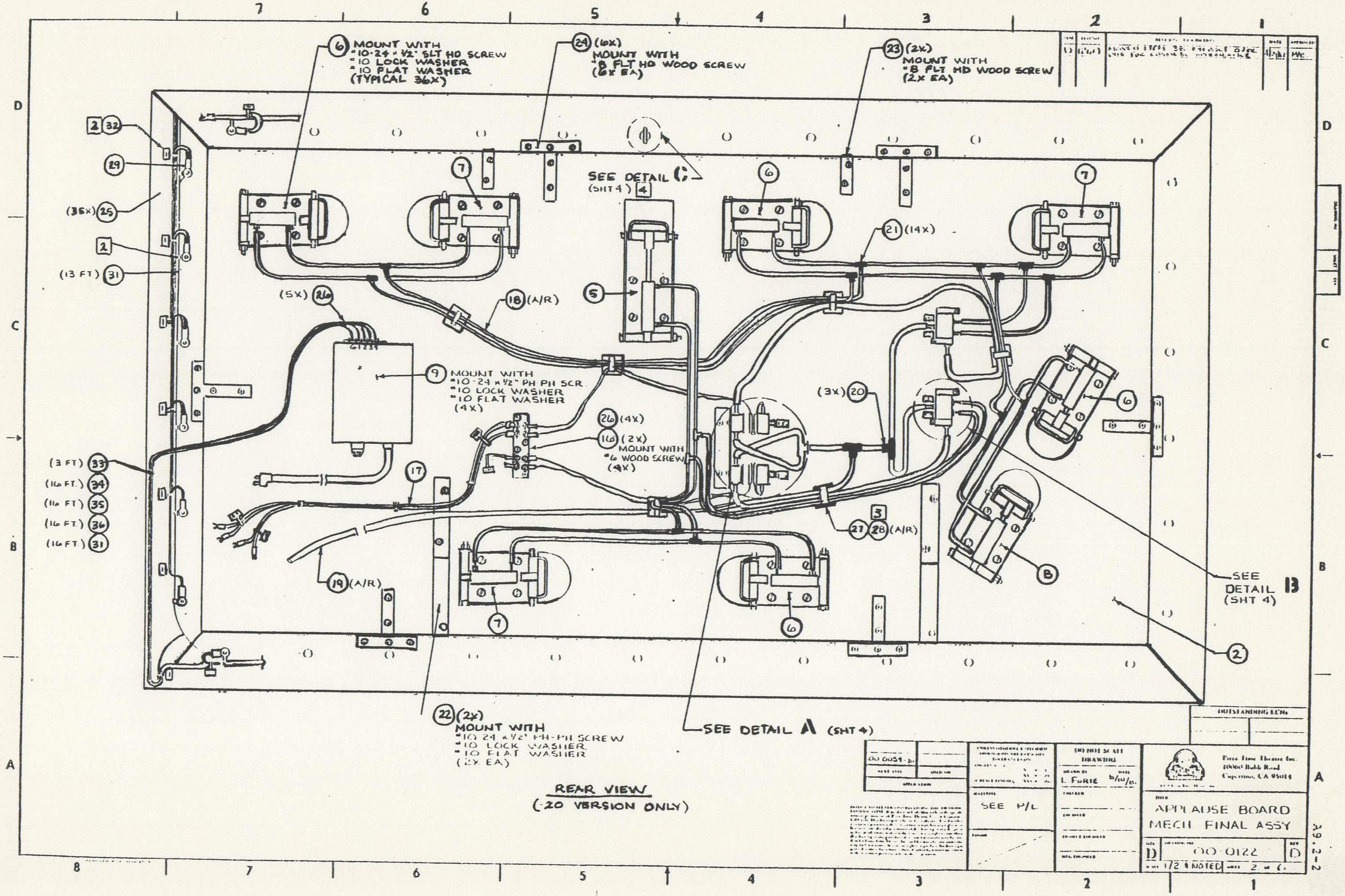

⑥ MOUNT WITH
#10-24 × 1/2" SLT HD SCREW
#10 LOCK WASHER
#10 FLAT WASHER
(TYPICAL 36X)
㉔ (6X)
MOUNT WITH
#8 FLT HD WOOD SCREW
(6X EA)
㉓ (2X)
MOUNT WITH
#8 FLT HD WOOD SCREW
(2X EA)
SEE DETAIL C
(SHT 4) 4
2 32
29
(36X) 25
2
(13 FT) 31
⑦
⑦
⑥
⑦
5
(5X) 26
18 (A/R)
21 (14X)
9 MOUNT WITH
#10-24 × 1/2" PH PH SCR.
#10 LOCK WASHER
#10 FLAT WASHER
(4X)
26 (4X)
16 (2X)
MOUNT WITH
#6 WOOD SCREW
(4X)
(3X) 20
⑥
8
SEE DETAIL B
(SHT 4)
(3 FT) 33
(16 FT.) 34
(16 FT) 35
(16 FT.) 36
(16 FT) 31
17
3
27 28 (A/R)
19 (A/R)
⑦
⑥
2
22 (2X)
MOUNT WITH
#10-24 × 1/2" PH-PH SCREW
#10 LOCK WASHER
#10 FLAT WASHER
(2X EA)
SEE DETAIL A (SHT 4)
8
7
6
5
4
3
2
1
D
C
B
A

REAR VIEW
(-20 VERSION ONLY)

OUTSTANDING ECNs

00 0054-

SEE P/L

DO NOT SCALE DRAWING

L. FORTE 6/10/83

Pizza Time Theatre Inc.
1000 Bubb Road
Cupertino, CA 95014

APPLAUSE BOARD
MECH FINAL ASSY

SIZE	DRAWING NO.	REV
D	00-0122	D
SCALE 1/2 & NOTED	SHEET 2 of 6	

39.2-2

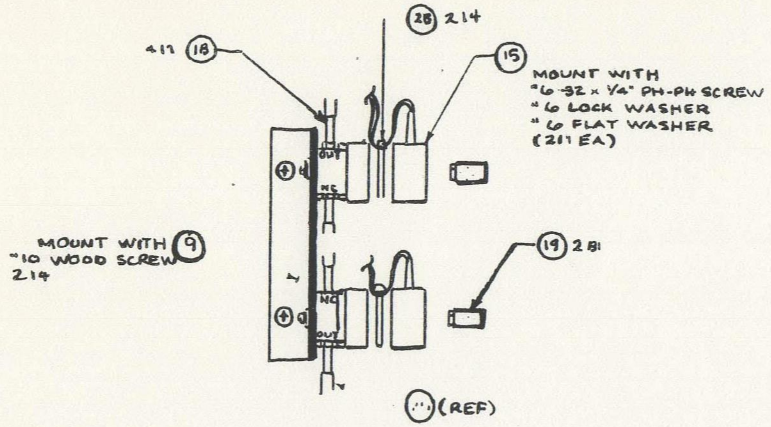

4 11 ⑱
㉘ 2 14
⑮
MOUNT WITH
#6-32 x 1/4" PH-PH SCREW
#6 LOCK WASHER
#6 FLAT WASHER
(2 1 EA)
MOUNT WITH ⑨
#10 WOOD SCREW
2 14
OUT
NC
NC
OUT
⑲ 2 BI
(REF)

DETAIL A

SCALE: FULL
(SEE SHTS 2 & 3)

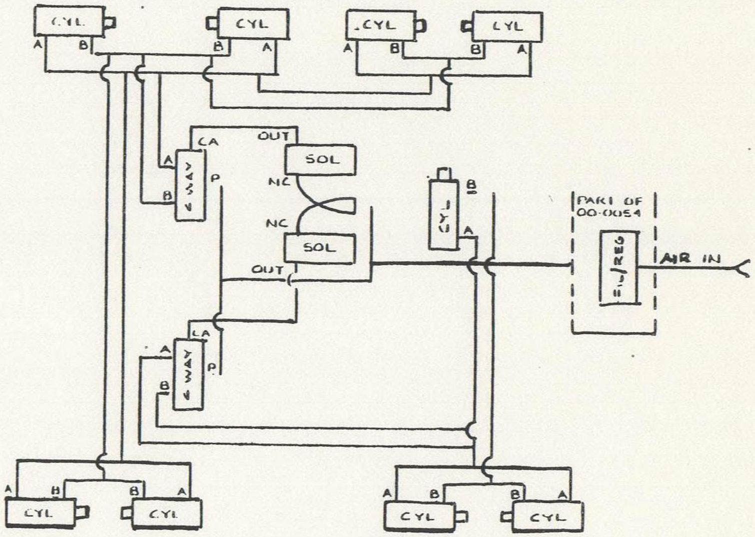

CYL
CYL
CYL
CYL
A
B
B
A
A
B
B
A
CA
OUT
SOL
A
B
4 WAY
P
NC
NC
SOL
OUT
B
A
PART OF
00-0054
REG
AIR IN
LA
A
B
4 WAY
P
A
B
B
A
A
B
B
A
CYL
CYL
CYL
CYL

AIRLINE SCHEMATIC

(-20 VERSION ONLY)

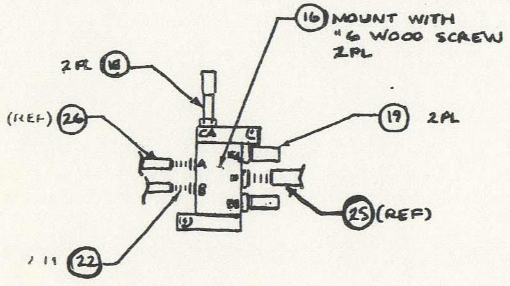

⑯ MOUNT WITH
#6 WOOD SCREW
2PL
2PL ⑱
(REF) ㉖
⑲ 2PL
CA
A
B
㉕(REF)
2 14 ㉒

DETAIL B

SCALE: FULL
(TYPICAL 2X)
(SEE SHTS 2 & 3)

OUTSTANDING ECNs

00-0054

DO NOT SCALE DRAWING

DRAWN BY L. FORTE DATE 5/12/83

MATERIAL SEE I/M

Pizza Time Theatre Inc.
10960 Bubb Road
Cupertino, CA 95014

TITLE APPLAUSE BOARD MECH ASSY

SIZE D DRAWING NO. 00-0122 REV D

SCALE 1/2 & NOTED SHEET 3 of 6

A9.2-3

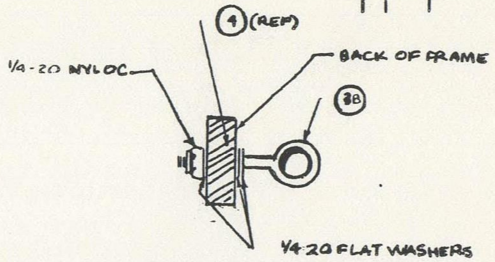
4 (REF)
1/4-20 NYLOC
BACK OF FRAME
38
1/4-20 FLAT WASHERS

DETAIL C
SCALE: FULL
(SEE SHTS 1, 2 & 3)

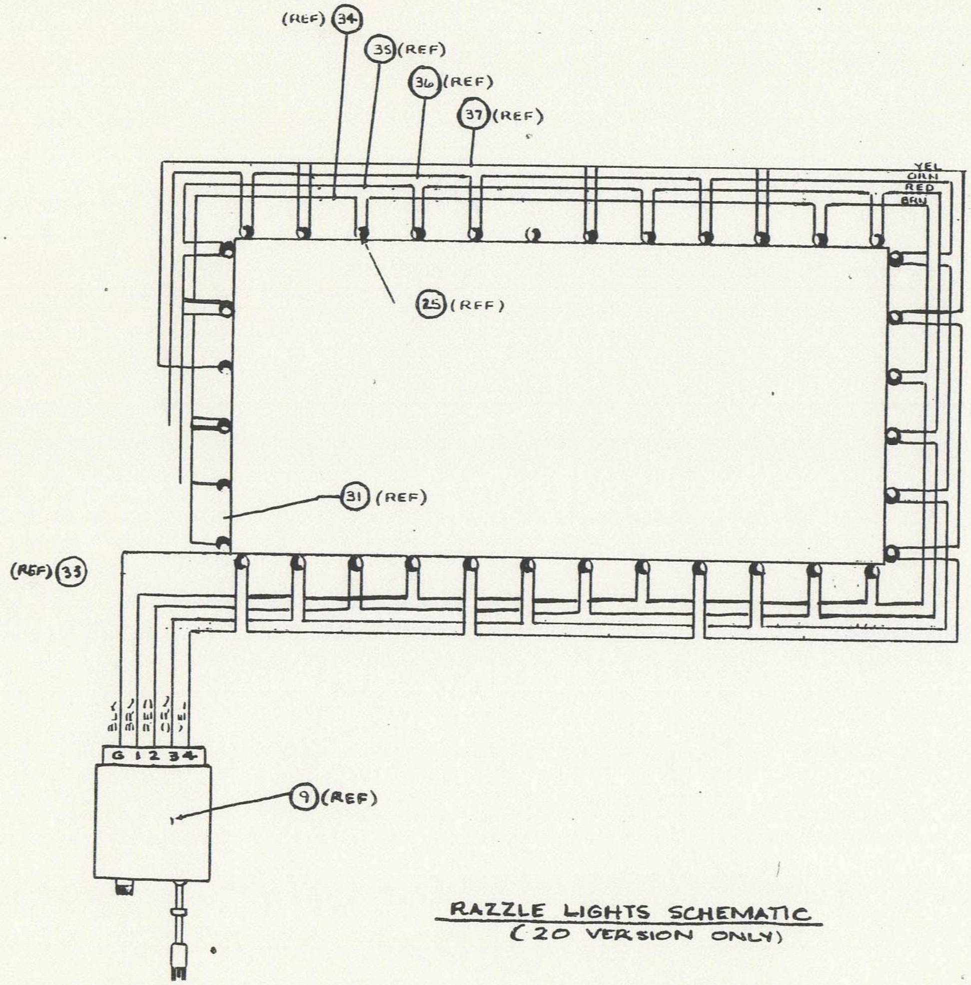
(REF) 34
35 (REF)
36 (REF)
37 (REF)
YEL
ORN
RED
BRN
25 (REF)
31 (REF)
(REF) 33
BLK
BRN
RED
ORN
YEL
G 1 2 3 4
9 (REF)

RAZZLE LIGHTS SCHEMATIC
(20 VERSION ONLY)

OUTSTANDING ECNs

00-0054

DO NOT SCALE DRAWING

DRAWN BY L FORTE DATE 5/13/80

MATERIAL SEE P/L

Pizza Time Theatre Inc.
10060 Bubb Road
Cupertino, CA 95014

APPLAUSE BOARD
MECH FINAL ASSY

D 00-0122 D

SCALE 1/2 & NOTED SHEET 4 of 6

LIST OF MATERIALS

	REV
00-0122	D

ITEM	90	80	70	60	50	40	30	20	10	PART NUMBER	REFERENCE	DESCRIPTION	L/M
1													
2								1		02-0243-10		STG. LT. 'T' NUT PLACEMENT	Yes
3													
4								1		01-0179-01		FRAME - APPLAUSE BD.	—
5								1		00-0163-10		HINGE MECH. ASSY - TRUNK	Yes
6								4		00-0163-20		HINGE MECH. ASSY - HAND	Yes
7								3		00-0163-30		HINGE MECH. ASSY - HAND	Yes
8								1		00-0163-40		HINGE MECH. ASSY - HAND	Yes
9								1		00-0023-10		RAZZLE MODULE	Yes
10								1		01-0175-01		BRKT., SOLENOID MT.	—
11								2		610-0001-01		SOLENOID	—
12								2		610-0008-01		4-WAY VALVE	—
13								6		630-0003-01		AIR MUFFLER	—
14								4		630-0008-01		BARB #10-32 TO 1/16 TUBE	—
15								8		630-0001-01		BARB #10-32 TO 1/8 TUBE	—
16								2		580-0001-01		TERM. BLOCK - 2 POS.	—
17								1		00-0143-10		INTERNAL APPL. CABLE	Yes
18								A/R		740-0002-01		TUBING 1/8 OD x 1/16 ID	—
19								A/R		740-0001-01		TUBING 1/4 OD x 1/8 ID	—
20								3		630-0005-01		AIR TEE 1/8 x 1/8 x 1/8	—
21								14		630-0023-01		AIR TEE 1/16 x 1/16 x 1/16	—
22								2		800-0048-01		90° CORNER IRON - 4" x 4"	—
23								2		800-0049-01		90° CORNER IRON - 2" x 2"	—

	USED ON		
-10		-60	
-20	00-0054-20	-70	
-30		-80	
-40		-90	
-50			

REV	A	B	C	D
ECO	0447	1138	1257	1269

TITLE

APPLAUSE BD.
MECH. ASSY

		REV
A	00-0122	D

SHT 5 OF 6

A9.2-5

BISHOP GRAPHICS/ACCUPRESS
REORDER NO. A 9624

LIST OF MATERIALS

REV
00-0122 D

ITEM	90	80	70	60	50	40	30	20	10	PART NUMBER	REFERENCE	DESCRIPTION	L/M
24								6		800-0109-01		T - BRACKET	—
25								35		520-0002-01		SOCKET, LAMP	—
26								9		760-0002-01		SPADE LUG #6x22AWG	—
27								A/R		760-0009-01		CABLE TIE MOUNT	—
28								A/R		760-0007-01		CABLE TIE WRAP	—
29								A/R		750-0002-01		SHRINK TUBING - BLK	—
30								2		760-0001-01		TIE WRAP, SMALL	—
31								13'		770-0018-01	(FT.)	#22AWG BUSS WIRE	—
32								38		760-0100-01		MARKER TIE, MIN.	—
33								3'		770-0011-01	(FT.)	#22 AWG INSUL. WIRE - BLK	—
34								16'		770-0011-02	(FT.)	↕ ↕ ↕ ↕ - BRN	—
35								16'		770-0011-03	(FT.)	↕ ↕ ↕ ↕ - RED	—
36								16'		770-0011-04	(FT.)	↕ ↕ ↕ ↕ - ORG	—
37								16'		770-0011-05	(FT.)	#22 AWG INSUL. WIRE YEL	—
38								1		800-0072-01		EYEBOLT, 1/4-20 x 2 1/2"	—
39								1		35-0144-01		FOAM 3/8" x 25" x 49" BLK	—

USED ON			
-10		-60	
-20		-70	
-30		-80	
-40		-90	
-50			

ECO REV

TITLE

APPLAUSE BD.
MECH, ASSY

REV
A 00-0122 D

SHT 6 OF 6

A9.2-6

BISHOP GRAPHICS/ACCUPRESS
REORDER NO. A 9524

	0176	RELEASE TO PRODUCTION		
A	0814	ITEMS 10 & 14 ON 40 VERSION MOUNTED ON OPPOSITE SIDE OF ITEM 9		

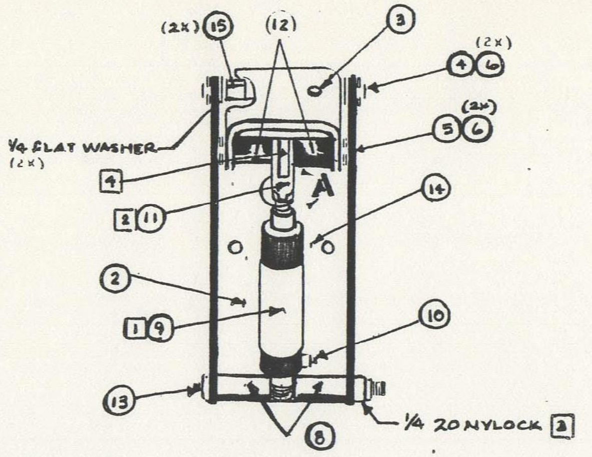
(2X) 15
(12)
3
(2X) 4 6
(2X) 5 6
1/4 FLAT WASHER (2X)
4
A
2 11
14
2
1 9
10
13
8
1/4 20 NYLOCK 3

10 VERSION
TRUNK HINGE

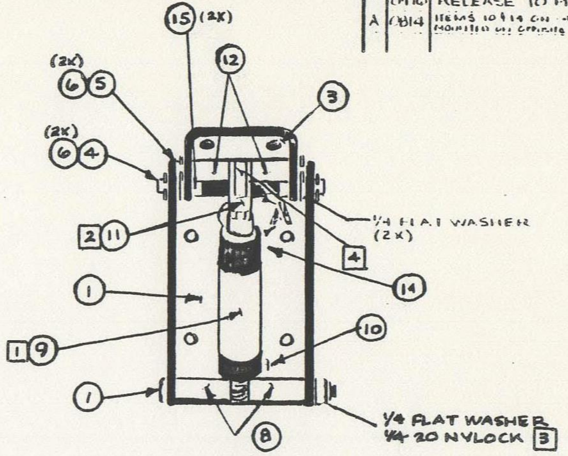
15 (2X)
(2X) 6 5
12
3
(2X) 6 4
1/4 FLAT WASHER (2X)
4
2 11
14
1
1 9
10
1
8
1/4 FLAT WASHER
1/4 20 NYLOCK 3

20 VERSION
HAND HINGE

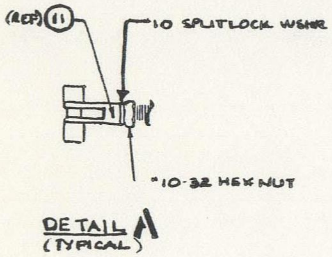
(REF) 11
10 SPLITLOCK WSHR
#10-32 HEX NUT

DETAIL A
(TYPICAL)

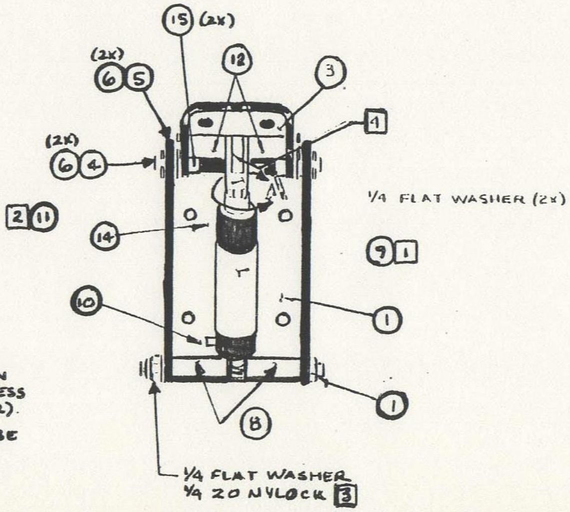
15 (2X)
(2X) 6 5
12
3
4
(2X) 6 4
1/4 FLAT WASHER (2X)
2 11
9 1
14
10
1
1
8
1/4 FLAT WASHER
1/4 20 NYLOCK 3

30 VERSION
HAND HINGE

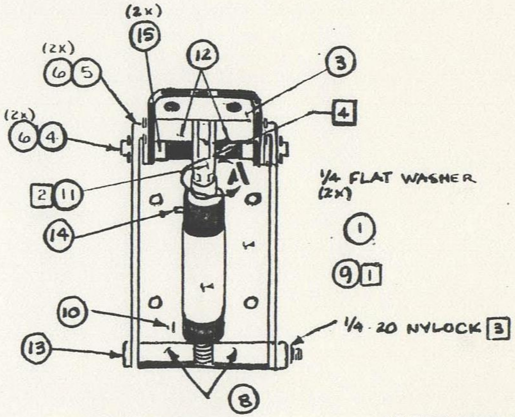
(2X) 15
(2X) 6 5
12
3
(2X) 6 4
4
2 11
A
1/4 FLAT WASHER (2X)
1
9 1
14
10
13
1/4-20 NYLOCK 3
8

40 VERSION
HAND HINGE

NOTES:

1. ITEM ④ MUST HAVE REAR PIVOT HOLE DRILLED OUT TO .250 DIA.
2. ITEM ⑪ MUST HAVE PIVOT PIN HOLE DRILLED OUT TO .250 DIA.
3. 1/4-20 NYLOCK MUST BE TIGHTENED DOWN SNUGLY, BUT NOT SO MUCH AS TO COMPRESS SIDE WALLS OF HINGE BASE (ITEMS 1 OR 2).
4. LUBRICATE ITEM ⑪ WITH TEFLON DRY LUBE AT PIVOT POINT.

OUTSTANDING ECNs

SEE L/M

DO NOT SCALE DRAWING

L. FORTE 3/6/80

Pizza Time Theatre Inc.
10040 Bubb Road
Cupertino, CA 95014

HINGE MECH
ASSY

D
00-0163
A
FULL
1 of 2

LIST OF MATERIALS

CHUCK E. CHEESE'S PIZZA TIME THEATRE

		REV
00	0163 -10→ -40	A

ITEM	90	80	70	60	50	40	30	20	10	PART NUMBER	REFERENCE	DESCRIPTION	L/M
1						1	1	1	–	01-0158-01		BOARD HAND HINGE	—
2						–	–	–	1	01-0171-01		TRUNK HINGE	—
3						1	1	1	1	01-0157-01		HAND HINGE	—
4						1	1	1	1	01-0167-01		CLAPPER PIN	—
5						1	1	1	1	01-0159-01		CYLINDER PIVOT PIN	—
6						4	4	4	4	800-0015-01		"E" RING - 1/4" SHAFT	—
7						–	1	1	–	800-0092-01		BOLT, CYLINDER PIVOT	—
8						2	2	2	2	01-0172-02		CYLINDER SPACER	—
9						1	1	1	1	600-0016-01		CYLINDER	—
10						1	1	1	1	630-0010-01		BARB #10-32 × 1/16 RT. ANGLE	—
11						1	1	1	1	01-0184-01		CLEVIS (MOD TO 650-0004)	—
12						2	2	2	2	01-0172-03		CLEVIS SPACER	—
13						1	–	–	1	01-0174-01		BOLT WITH HOLE	—
14						1	1	1	1	630-0008-01		BARB #10-32 × 1/16 STRAIGHT	—
15						2	2	2	2	680-0014-01		BEARING 1/4" FLANGED	—

	USED ON	
		-60
-10	00-0122 -10 -20	-70
-20	00-0122 -10 -20	-80
-30	00-0122 -10 -20	-90
-40	00-0122 -10 -20	
-50		

ECO	REV
C476	–
0814	A

TITLE

HINGE MECH
ASSY

		REV
A	00-0163 -10→ -40	A

SHT 2 OF 2

A9.3-2

BISHOP GRAPHICS/ACCUPRESS
REORDER NO. A 9624

A10. Flag Waver

1	OBS[illegible]	OBSOLETED 10 VERSION [illegible] TO SHOW 20 VERSION	[illegible]	RH
G	10[illegible]	[illegible] PLAQUE [illegible]	[illegible]	[illegible]

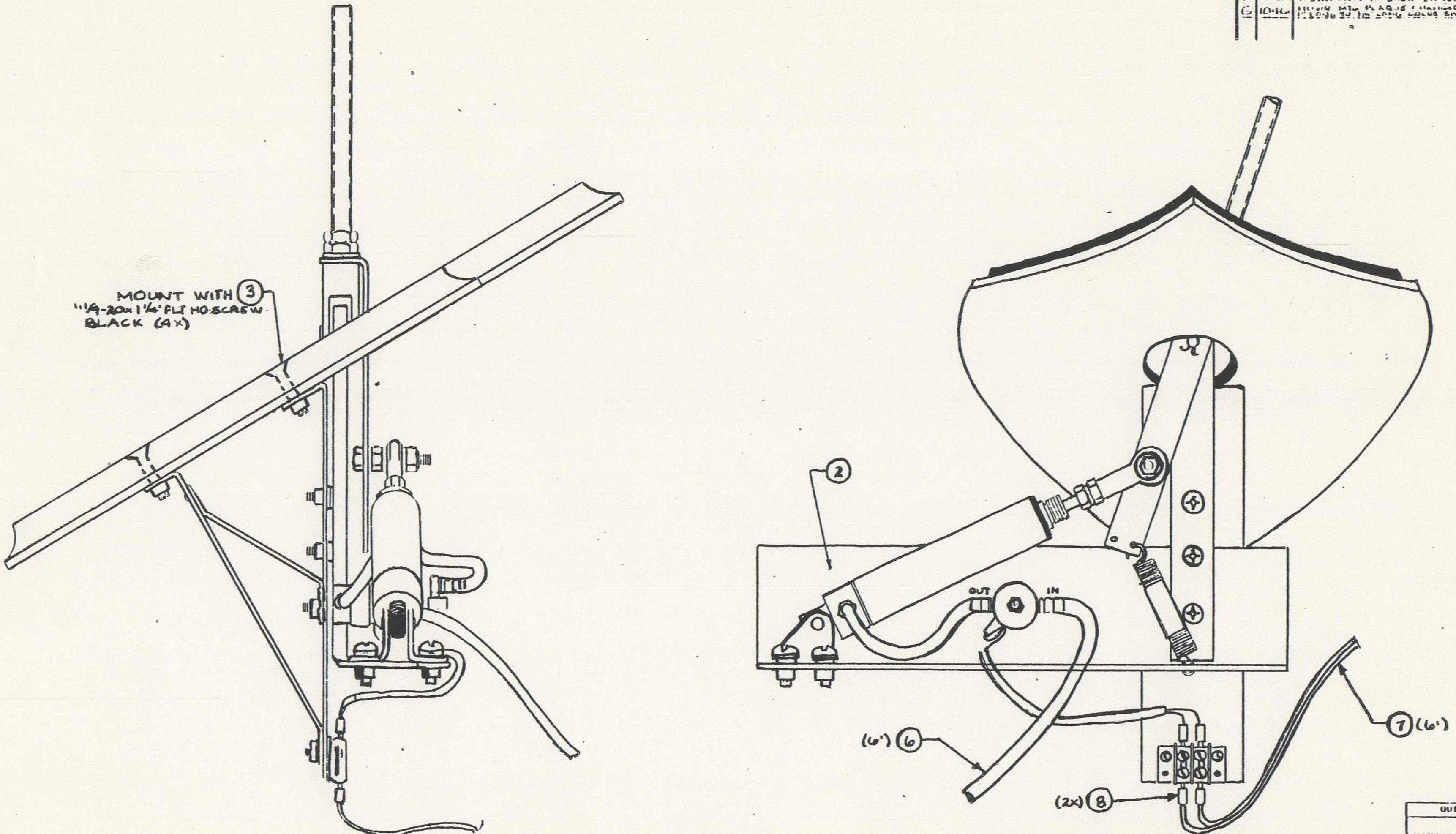

MOUNT WITH ③
1/4-20 x 1 1/4" FLT HD. SCREW
BLACK (4X)
②
OUT
IN
(6') ⑥
⑦ (6')
(2X) ⑧

20 VERSION

OUTSTANDING ECNs

00-0233
00-0123

DO NOT SCALE DRAWING

C. Fiacle [illegible]

SPE L/M

Pizza Time Theatre Inc
1213 Innsbruck Dr
Sunnyvale, CA 94086

FLAG WAVER
FINAL ASSY

D
00-0004
G
1/1
1 of 2

A10.1-1

LIST OF MATERIALS

REV

00-0004 G

ITEM	90	80	70	60	50	40	30	20	10	PART NUMBER	REFERENCE	DESCRIPTION	L/M
1													
2								1		00-0001-20		FLAG WAVER ASSY-RIGHT	YES
3								1		01-0003-01		DECORATIVE PLAQUE	—
4													
5													
6								6'		740-0001-01		TUBING 1/4 O.D. × 1/8 I.D.	—
7								6'		770-0022-01		2 COND ZIP, WHITE #18AWG	—
8								2		760-0002-01		#6 SPADE LUG	—

	USED ON		
-10		-60	
-20	00-0123 00-0233	-70	
-30		-80	
-40		-90	
-50			

REV	A	B	C	D	E	F	G
ECO	0437	0480	0505	0776	0836	0889	1046

TITLE

FLAG WAVER
FINAL ASSY

REV

A 00-0004 G

SHT 2 OF 2

A10.1-2

Ⓢ BISHOP GRAPHICS/ACCUPRESS
REORDER NO. A 9624

F	[illegible]	COMPLETED [illegible] VERSION [illegible]	[illegible]	R/I
G	[illegible]	[illegible]		
H	[illegible]	[illegible]	1/1 [illegible]	RA!

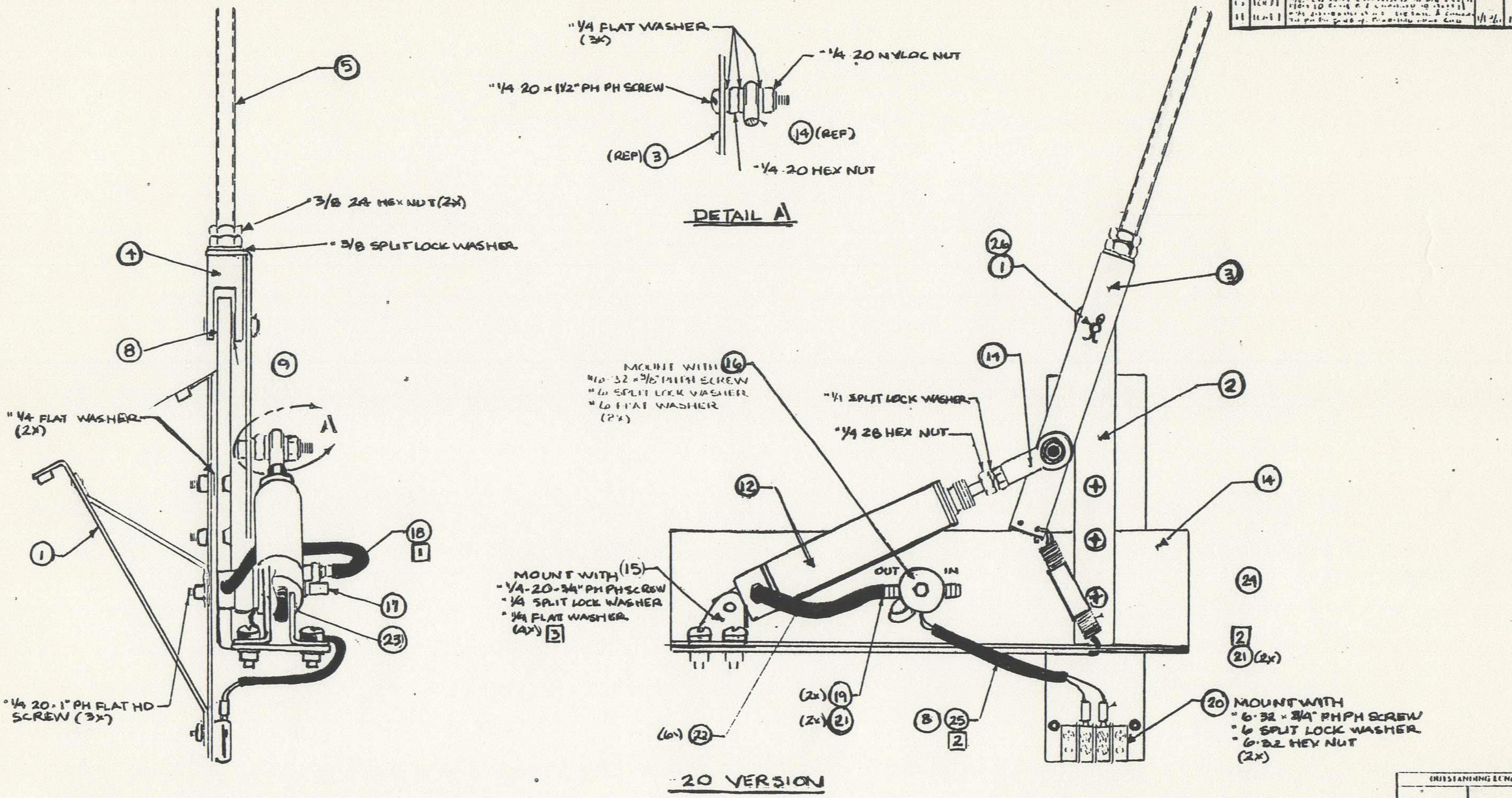
"1/4 FLAT WASHER (3X)
"1/4 20 NYLOC NUT
"1/4 20 × 1 1/2" PH PH SCREW
(REF) 3
14 (REF)
"1/4 20 HEX NUT
DETAIL A
5
3/8 24 HEX NUT (2X)
" 3/8 SPLIT LOCK WASHER
4
8
9
"1/4 FLAT WASHER (2X)
A
1
18
1
17
23
"1/4 20 · 1" PH FLAT HD SCREW (3X)
26
1
3
MOUNT WITH 16
"6·32 × 5/8" PH PH SCREW
"6 SPLIT LOCK WASHER
"6 FLAT WASHER
(2X)
14
"1/4 SPLIT LOCK WASHER
"1/4 28 HEX NUT
2
12
14
OUT
IN
MOUNT WITH (15)
"1/4-20-3/4" PH PH SCREW
"1/4 SPLIT LOCK WASHER
"1/4 FLAT WASHER
(4X) 3
24
2
21 (2X)
(2X) 19
(2X) 21
(6X) 22
8
25
2
20 MOUNT WITH
"6·32 × 3/4" PH PH SCREW
"6 SPLIT LOCK WASHER
"6·32 HEX NUT
(2X)
20 VERSION

NOTES:

1. 1/8 NPT BARB (ITEM 18) SHOULD BE WRAPPED WITH TEFLON TAPE BEFORE INSERTING
2. TUBING (ITEM 25) TO BE PUT ON SOLENOID WIRES BEFORE ITEM 21 IS CRIMPED ON
3. MOUNTING HARDWARE FOR PIVOT BRACKETS (ITEM 15) TO BE [illegible]

OUTSTANDING ECNs

00-0001

DO NOT SCALE DRAWING

L. Fouche

RTL [illegible]

MATERIAL SEE L/M

Pizza Time Theatre Inc
1213 Innsbruck Dr
Sunnyvale, CA 94086

FLAG WAVER
SUB ASSY

D 00-0001 H

SCALE 1/1 SHEET 1 OF 3

A10.2-1

LIST OF MATERIALS

Chuck E. Cheese's Pizza Time Theatre

00-000. REV H

ITEM	90	80	70	60	50	40	30	20	10	PART NUMBER	REFERENCE	DESCRIPTION	L/M
1								1		02-0001-10		FLAG WAVER MT.	YES
2								1		01-0007-01		SUPPORT BAR	—
3								1		01-0004-01		LINKAGE	—
4								1		650-0001-01		CLEVIS	—
5								1		01-0002-01	✓	SUPPORT-FLAG POLE	—
6										- -			
7								1		800-0003-01		CLEVIS PIN	—
8								1		680-0001-01		FLANGE BEARING	—
9								1		680-0002-01		THRUST BEARING	—
10										- -			
11								1		01-0005-02		BRKT SUPPORT - RT.	—
12								1		600-0001-01		AIR CYLINDER	—
13										- -			
14								1		680-0026-01		SPHERICAL ROD END	—
15								1PR.		650-0006-01		PIVOT BRKT (PAIR)	—
16								1		610-0001-01		SOLENOID	—
17								1		630-0003-01		MUFFLER	—
18								1		630-0002-01		NIPPLE 1/8 NPT TO 1/8 ID	—
19								2		630-0001-01		NIPPLE 10-32 TO 1/8 ID	—
20								1		580-0001-01		TERM BLOCK - 2 POS.	—
21								2		760-0002-01		SPADE LUG #6	—
22								6"		740-0001-01		AIR HOSE 1/8" ID	—
23								1		760-0001-01		TIE WRAP	—

	USED ON		
-10		-60	
-20	00-0004-20	-70	
-30		-80	
-40		-90	
-50			

REV	A	B	C	D	E	F	G	H
ECO	0437	0480	0505	0567	0577	0954	1009	1047

TITLE

FLAG WAVER
SUB ASSY

A 00-0001 REV H

SHT 2 OF 3

A10.2-2

© BISHOP GRAPHICS/ACCUPRESS
REORDER NO. A 9524

LIST OF MATERIALS

REV H
00-0001

ITEM	90	80	70	60	50	40	30	20	10	PART NUMBER	REFERENCE	DESCRIPTION	L/M
24								1		620-0001-01		SPRING	—
25								8"		750-0001-01		SHRINK TUBING 1/8 ID	—
26								1		800-0004-01		COTTER PIN	—
27								2		630-0033-01		WASHER #10-32	—

	USED ON			
		-60		REV
-10		-70		
-20		-80		ECO
-30		-90		
-40				
-50				

TITLE
FLAG WAVER
SUB ASSY

REV
A 00-0001-H

SHT 3 OF 3

A10.2-3

BISHOP GRAPHICS/ACCUPRESS
REORDER NO. A 9624

A11. Pneumatics

REV	ECN NO	REVISION DESCRIPTION	DATE	APPROVED
A	0231	SOME NEW NIPPLES AND NEW HARDWARE	[illegible]	DZ
B	0481	DELETED ITEM 7 AND (2) OF ITEM 5 ADDED (1 EA) TO ITEM 6 AND DELETE ITEM 9 [illegible] CHANGED [illegible] TO WOOD SCR. ADDED AIR [illegible]	[illegible]	[illegible]
C	0141		[illegible]	[illegible]
D	0121	ADDED 20 VERSION	[illegible]	[illegible]

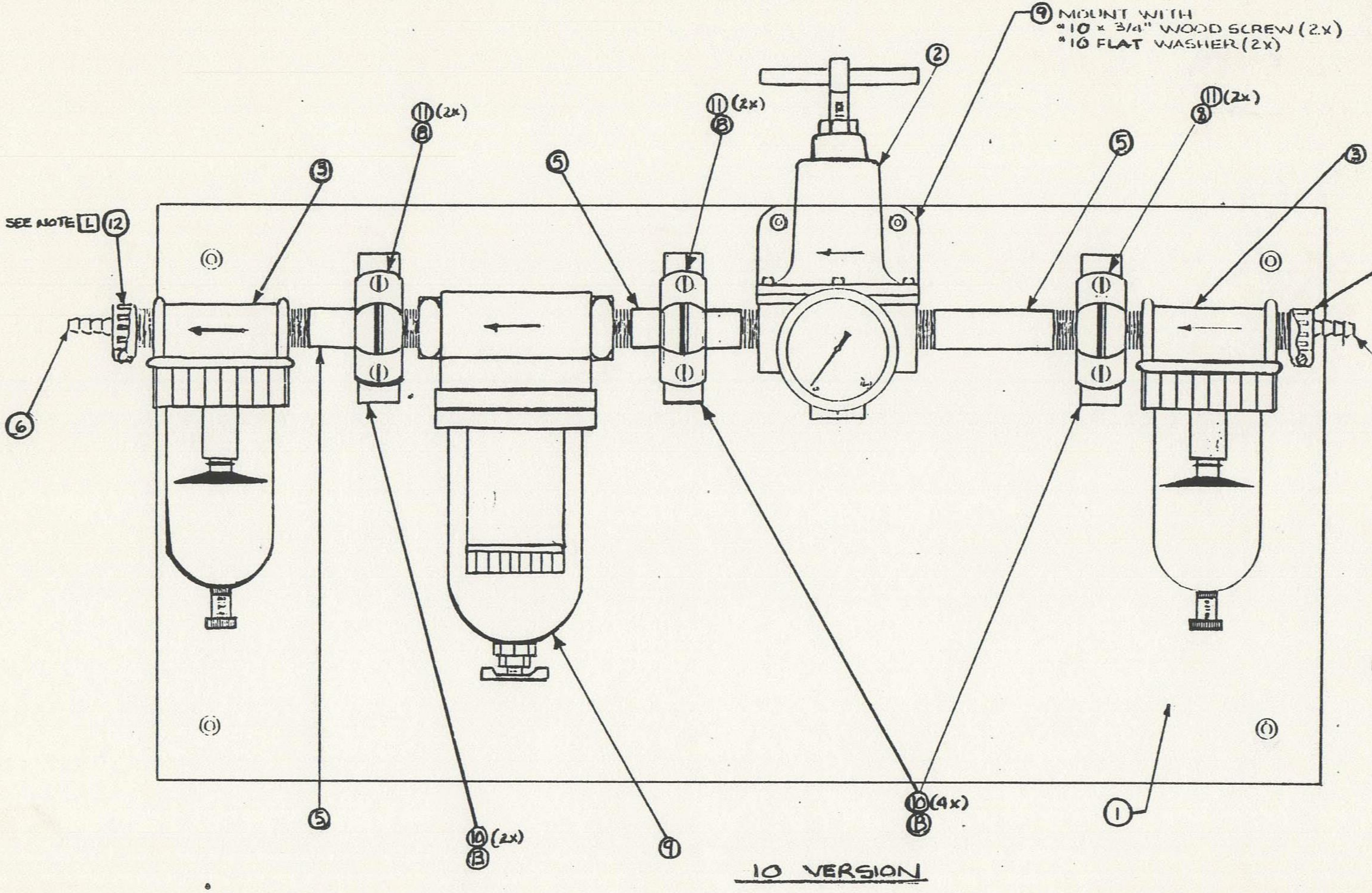
⑨ MOUNT WITH
#10 × 3/4" WOOD SCREW (2X)
#10 FLAT WASHER (2X)
②
⑪(2X)
⑧
⑪(2X)
⑧
⑪(2X)
⑧
⑤
⑤
⑤
③
③
SEE NOTE 1 ⑫
⑫ SEE NOTE 1
⑥
⑥
⑤
⑩(2X)
⑬
⑨
⑩(4X)
⑬
①

10 VERSION

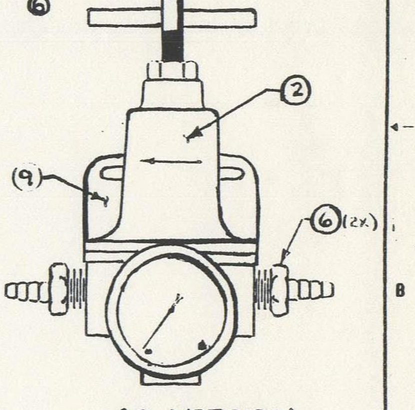

20 VERSION
SEE NOTE 4

NOTES:

1. CLAMP ITEM ⑫ AROUND ADAPTOR (ITEM ⑥)
2. USE TEFLON PIPE TAPE AROUND ALL JOINTS
3. INSERT FILTER & REGULATOR DATA SHEETS IN PLASTIC BAG & STAPLE TO FRONT UNDER REGULATOR
4. PUT 00 0052 20, HOSE CLAMPS (ITEM 14), AND AIR TEE (ITEM 14) IN PLASTIC BAG, TO BE SHIPPED WITH 00-0266-30.

OUTSTANDING ECNs

00 0266	
00 0216	
NEXT ASSY	USED ON
APPLICATION	

MATERIAL
SEE L/M

DO NOT SCALE DRAWING

Pizza Time Theatre Inc.
10950 Bubb Road
Cupertino, CA 95014

TITLE FILTER REGULATOR
ASSY
MAIN

SIZE D
DRAWING NO 00 0052
REV D
SHEET 1 OF 2

LIST OF MATERIALS

CHUCK E. CHEESE PIZZA TIME THEATRE

REV

00-00 2	D

ITEM	90	80	70	60	50	40	30	20	10	PART NUMBER	REFERENCE	DESCRIPTION	L/M
1								-	1	01-0152-01		FILTER/REG. MTG. BOARD	-
2								1	1	610-0004-01		REGULATOR W/ GUAGE	-
3								-	2	610-0010-01		AIR FILTER	-
4								-	1	610-0011-01		AIR FILTER-COALESCING	-
5								-	3	730-0001-01		3" LONG COPPER 3/8 NPT PIPE	-
6								2	2	630-0014-01		3/8 NPT TO 3/8 HOSE ADAPTER	-
7													
8								-	3	800-0032-01		3/8 'U' PIPE CLAMP	-
9								1	1	650-0030-01		REG. MTG. BRKT.	-
10								-	6	800-0096-01		#10 x 1 1/2" LONG WOOD SCREW	-
11								-	6	800-0095-01		#10 x 1" LONG WOOD SCREW	-
12								2	2	800-0031-01		1" ID HOSE SCREW CLAMP	-
13								-	3	01-0153-01		BRKT. MTG. BLOCK	-
14								1	-	630-0040-01		AIR TEE 3/8 x 3/8 x 3/8	-

	USED ON	
		-60
-10	00-0210	-70
-20	00-0266-36	-80
-30		-90
-40		
-50		

REV	ECO
A	0231
B	0481
C	0747
D	0924

TITLE

FILTER / REG.
MAIN ASSY

REV

A 00-0052 D

SHT 2 OF 2

A11.1-2

BISHOP GRAPHICS/ACCUPRESS
REORDER NO. A 9624

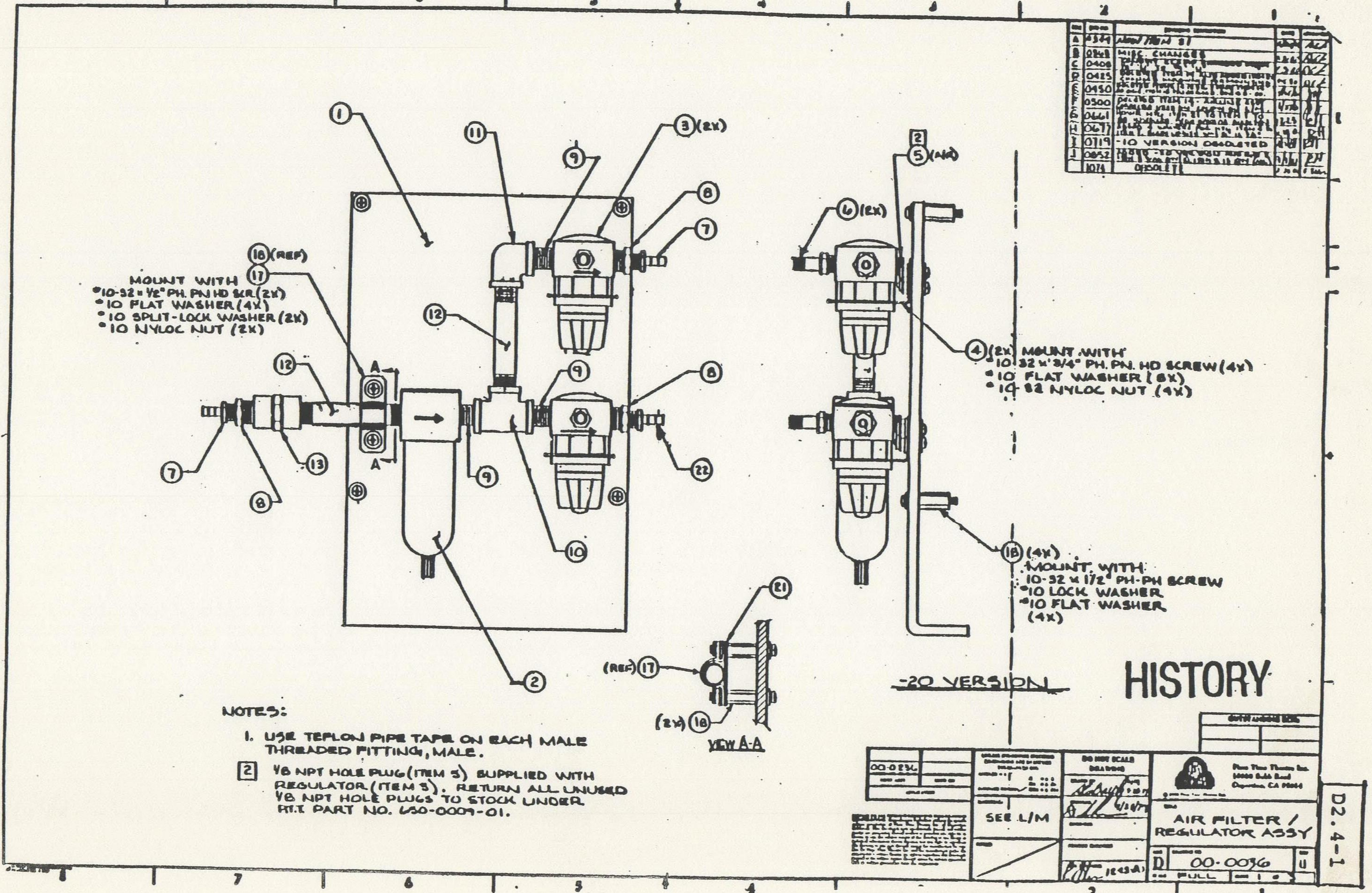
①
⑪
⑨
③(2X)
⑧
⑦
⑱(REF)
⑰
⑫
⑫
⑨
⑧
⑬
⑦
⑧
⑨
⑩
㉒
②
A
A
2
⑤(4X)
⑥(2X)
④(2X)
⑱(4X)
㉑
(REF)⑰
(2X)⑱
VIEW A-A
-20 VERSION

MOUNT WITH ⑰
°10-32 x 1/2" PH. PN HD SCR (2X)
°10 FLAT WASHER (4X)
°10 SPLIT-LOCK WASHER (2X)
°10 NYLOC NUT (2X)

④(2X) MOUNT WITH
°10-32 x 3/4" PH. PN. HD SCREW (4X)
°10 FLAT WASHER (8X)
°10-32 NYLOC NUT (4X)

⑱(4X)
MOUNT WITH
10-32 x 1/2" PH-PH SCREW
°10 LOCK WASHER
°10 FLAT WASHER
(4X)

NOTES:

1. USE TEFLON PIPE TAPE ON EACH MALE THREADED FITTING, MALE.

2 1/8 NPT HOLE PLUG (ITEM 5) SUPPLIED WITH REGULATOR (ITEM 3). RETURN ALL UNUSED 1/8 NPT HOLE PLUGS TO STOCK UNDER P.T.T. PART NO. 650-0009-01.

A	0324	NEW ITEM 21	[illegible]	[illegible]
B	0268	MISC. CHANGES	[illegible]	[illegible]
C	0400	[illegible]	[illegible]	[illegible]
D	0425	[illegible]	[illegible]	[illegible]
E	0450	[illegible]	[illegible]	[illegible]
F	0500	[illegible]	[illegible]	[illegible]
G	0661	[illegible]	[illegible]	[illegible]
H	0677	[illegible]	[illegible]	[illegible]
I	0719	-10 VERSION OBSOLETED	[illegible]	[illegible]
J	0852	[illegible]	[illegible]	[illegible]
	1014	OBSOLETE	[illegible]	[illegible]

HISTORY

00-0236

SEE L/M

DO NOT SCALE DRAWING

AIR FILTER /
REGULATOR ASSY

D 00-0036 U

FULL

D2.4-1

LIST OF MATERIALS

CHUCK E. CHEESE'S PIZZA TIME THEATRE

REV

00-0036 J

ITEM	90	80	70	60	50	40	30	20	10	PART NUMBER	REFERENCE	DESCRIPTION	L/M
1							–	1		01-0097-01		FILTER MOUNTING PLATE	–
2							1	1		610-0006-01		FILTER	–
3							2	2		610-0009-01		REGULATOR	–
4							2	2		650-0010-01		REGULATOR MTG. BRKT.	–
5							A/R	A/R		650-0009-01		1/8 NPT PIPE PLUG	–
6							2	2		630-0006-01		VALVE STEM FITTING	–
7							2	2		630-0002-01		BARB 1/8 NPT TO 1/8 TUBE	–
8							3	3		630-0022-01		ADAPTER 1/4 NPT MALE TO 1/8 NPT FEM	–
9							3	3		630-0021-01		NIPPLE, 1/4 NPT - MALE/MALE	–
10							1	1		630-0020-01		1/4 NPT FEMALE TEE	–
11							1	1		630-0018-01		1/4 NPT FEMALE ELBOW	–
12							1	2		730-0003-01		1/4 NPT PIPE 3" LG.	–
13							–	1		630-0019-01		COUPLING - STRAIGHT 1/4 NPT FEM	–
14													
15													
16													
17							–	1		800-0103-01		CONDUIT CLAMP 1/4" U	–
18							–	6		580-0038-01		10-32 x 3/4 THD. M/F STAND OFF	–
19													
20													
21							–	1		01-0251-01		PIPE SUPPORT STRAP	–
22							1	1		630-0011-01		BARB 1/8 NPT TO 1/16 TUBE	–

	USED ON		
-10		-60	
-20	00-0236	-70	
-30	00-0250	-80	
-40		-90	
-50			

REV	A	B	C	D	E	F	G	H	I	J
ECO	0349	0363	0408	0425	0450	0500	0661	0677	0719	0852

TITLE

AIR FILTER /
REGULATOR
ASSY

REV

A 00-0036 J

HT 3 OF 3

D2.4-3

BISHOP GRAPHICS/ACCUPRESS
REORDER NO. A 9624

A	1927	PRODUCTION RELEASE -40 VERSION WAS 20 . 30		

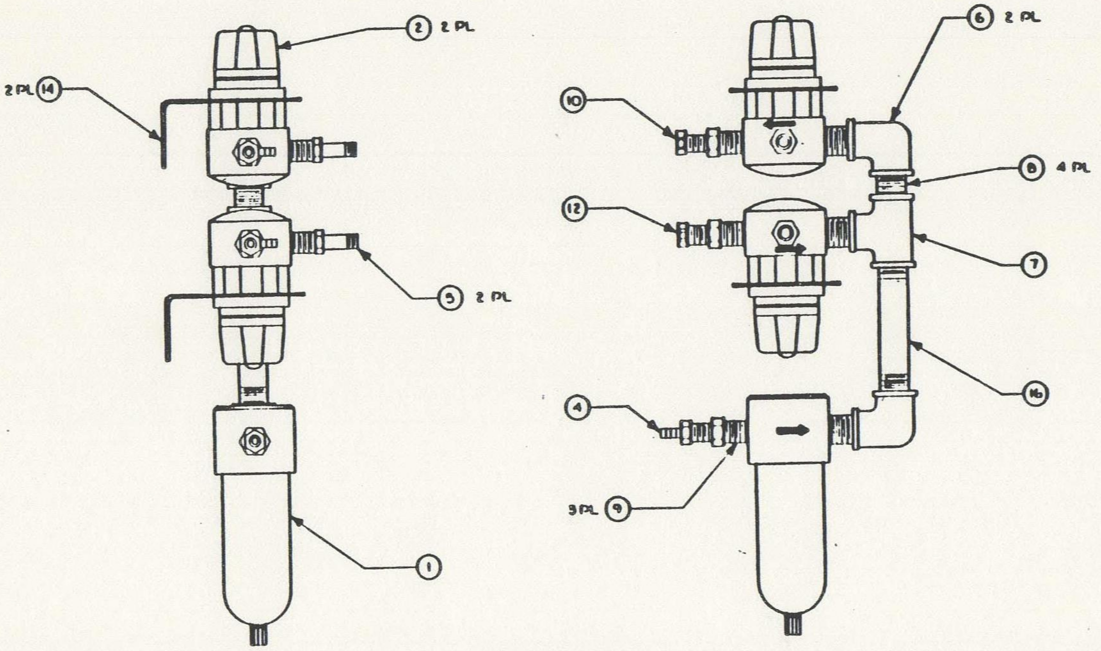

② 2 PL
2 PL ⑭
⑤ 2 PL
①
⑥ 2 PL
⑩
⑧ 4 PL
⑫
⑦
⑯
④
3 PL ⑨

-40 VERSION

NOTES
1 APPLY TEFLON TAPE ON ALL MALE FITTINGS BEFORE INSTALLATION

40	00 0320
40	00 0236

DRODUE 1/4/9

FORTE 1/5/9

SEE L/M

AIR FILTER/
REGULATOR ASSY'

D

00 0036

A

1/1

1 2

Chuck E. Cheese's
Pizza Time Theatre
© 1978 Pizza Time Theatre Inc

LIST OF MATERIALS

ITEM	90	80	70	60	50	40	30	20	10	PART NUMBER	REFERENCE	DESCRIPTION	L/M
1						1				610-0006-01		FILTER	-
2						2				610-0009-01		REGULATOR	-
3													
4						1				630-0002-01		BARB 1/8" x 1/8"	-
5						2				630-0006-01		VALVE STEM FITTING	-
6						2				630-0018-01		ELBOW 1/4" NPT FEM.	-
7						1				630-0020-01		TEE 1/4" NPT FEM.	-
8						4				630-0021-01		NIPPLE 1/4" NPT	-
9						3				630-0022-01		ADAPTER 1/4" NPT	-
10						1				630-0025-01		RIGHT ANGLE 1/8" NPT	-
11													
12						1				630-0043-01		RIGHT ANGLE 1/16" I.D.	-
13													
14						2				650-0010-01		REG. MTG. BRACKET	-
15													
16						1				730-0003-01		3" COPPER PIPE	-

	USED ON		
-10		-60	
-20		-70	
-30		-80	
-40	00-0236 00-0320	-90	
-50	1		

REV	ECO
A	0349
B	0363
C	0408
D	0425
E	0450
F	0500
G	0661
H	0677
I	0719
J	0852
OBS	1074
A	1527

TITLE
AIR FILTER /
REGULATOR
ASSY.

REV
ASSY NO. 00-0036-A

SHT 2 OF 2

Chuck E. Cheese's Pizza Time Theatre

Q.A.	REV DATE
ORIGINATOR J. Barrial	APPROVAL QA J. Barrial
APPROVAL ENG M. Crew	APPROVAL MFG.

QUALITY ASSURANCE OPERATING PROCEDURE

Title: C.E.C./GUEST AIRLINE ASSEMBLY WORKMANSHIP STANDARD

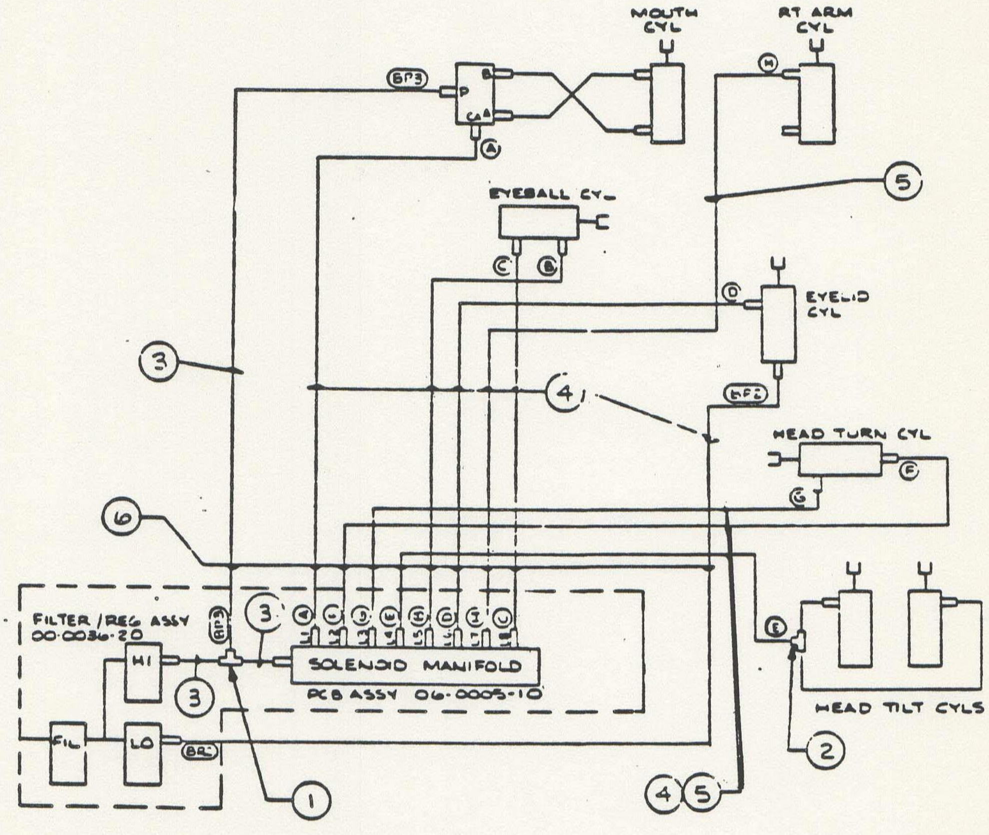
MOUTH CYL
RT ARM CYL
BP3
P
B
A
Ⓐ
Ⓗ
5
EYEBALL CYL
Ⓒ
Ⓑ
Ⓓ
EYELID CYL
3
4
BP2
HEAD TURN CYL
Ⓕ
Ⓖ
6
FILTER/REG ASSY 00-0036-20
BP3
3
Ⓐ Ⓖ Ⓘ Ⓔ Ⓗ Ⓓ Ⓘ Ⓒ
SOLENOID MANIFOLD
PCB ASSY 06-0005-10
HI
3
FIL
LO
BP2
1
4 5
Ⓔ
HEAD TILT CYLS
2

NOTES:

1. SEE 04-0001 WIRE LIST- CEC & GUEST AIRLINES, FOR TUBING USEAGE.

FOR USE BY PIZZA TIME THEATRE, INC.® ONLY

PROPRIETARY INFORMATION
PIZZA TIME THEATRE, INC.®

Chuck E. Cheese's
Pizza Time Theatre

Q.A.	REV DATE.
ORIGINATOR J. Barrial	APPROVAL QA J. Barrial
APPROVAL ENG. M. Crew	APPROVAL MFG.

QUALITY ASSURANCE OPERATING PROCEDURE

Title: WIRE LIST - CEC/GUEST AIRLINE ASSEMBLY

WORKMANSHIP STANDARD

FROM - (SOL CONTROL)	TO	AIRLINE SIZE AND P/N
A (L1)	A	1/16" I.D. 740-0002
F (L2)	F	↕
G (L3)	G	↕
E (L4)	E	↕
B (L5)	B	↕
D (L6)	D	↕
H (L7)	H	↕
C (L8)	C	↕
BP2	BP2	1/16" I.D. 740-0002
BP3	BP3	1/8" I.D. 740-0001

NOTES:

1. LABEL EACH END OF AIRLINE WITH WIRE MARKERS (PTT P/N 700-0076), USING LETTERS SPECIFIED IN TABLE.
2. USE P/N 13-0002, HARNESS BOARD - AIRLINE ASSYS TO CUT TUBING LENGTHS.

FOR USE BY PIZZA TIME THEATRE, INC.® ONLY
PROPRIETARY INFORMATION

LIST OF MATERIALS

PIZZA TIME THEATRE

		REV
00	0087	A

ITEM	90	80	70	60	50	40	30	20	10	PART NUMBER	REFERENCE	DESCRIPTION	L/M
1									1	630-0005		PLASTIC AIR TEE 1/8"x1/8"x1/8"	—
2									1	630-0023		PLASTIC AIR TEE 1/16"x1/16"x1/16"	—
3									4'	740-0001		TUBING 1/4" OD x 1/8" ID	—
4									28'	740-0002		TUBING 1/8" OD x 1/16" ID	—
5									3'	760-0011		SPIRAL WRAP 1/4" OD	—
6									6'	760-0012		SPIRAL WRAP 1/2" OD	—
7									A/R	700-0076		INSTA-CODE WIRE MARKERS	-
							REF			04-0001		WIRE LIST- CEC/GUEST AIRLINES	
							REF			13-0002		HARNESS BD. - AIRLINE ASSYS	-

PROPRIETARY INFORMATION
PIZZA TIME THEATRE, INC.©

	USED ON		
-10		-60	
-20		-70	
-30		-80	
-40		-90	
-50			

REV	A
ECO	0632

TITLE
CEC / GUEST
AIRLINE ASSY

		REV	
A	00	0087	A

SHT OF

BISHOP GRAPHICS/ACCUPRESS
REORDER NO. A 9624

Chuck E. Cheese's Pizza Time Theatre

Q.A.	REV DATE
ORIGINATOR J. Barrial	APPROVAL QA J. Barrial
APPROVAL ENG M. Casa	APPROVAL MFG.

QUALITY ASSURANCE OPERATING PROCEDURE

Title: JASPER T. JOWLS AIRLINE ASSEMBLY WORKMANSHIP STANDARD

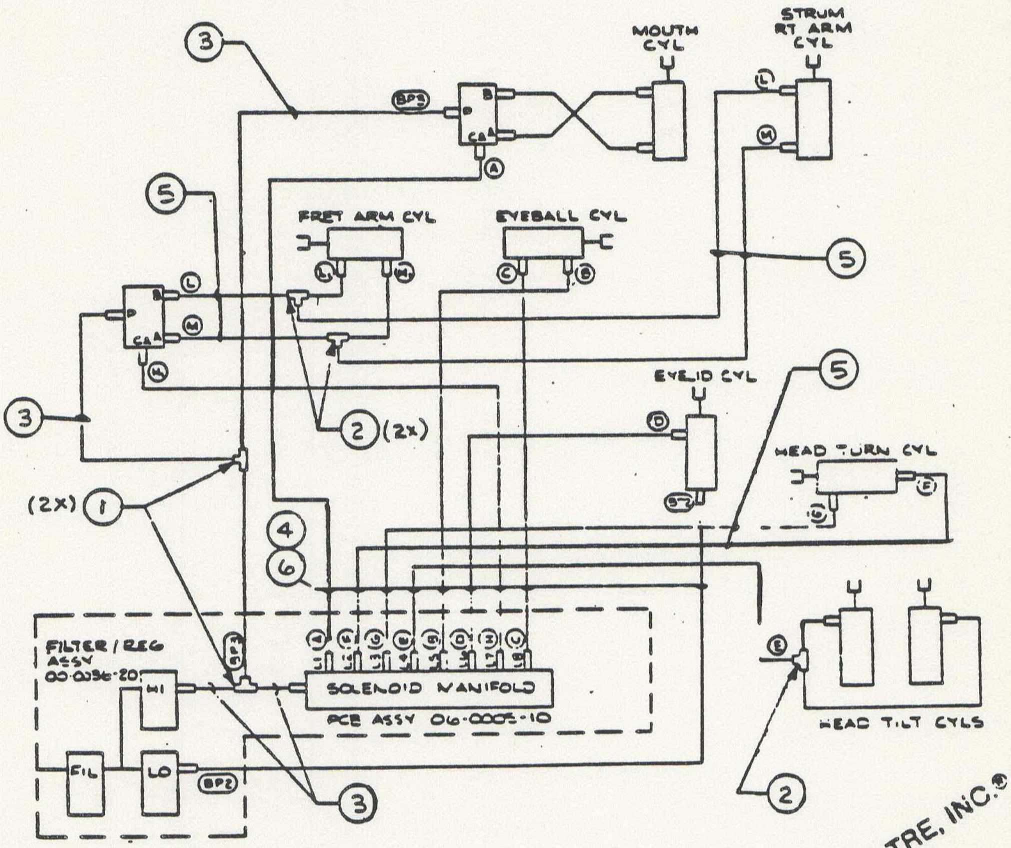
MOUTH CYL
STRUM RT ARM CYL
BP3
B
P
CA
A
L
M
FRET ARM CYL
EYEBALL CYL
C
B
EYELID CYL
D
HEAD TURN CYL
F
G
E
HEAD TILT CYLS
FILTER / REG ASSY 00-0036-20
HI
FIL
LO
BP2
SOLENOID MANIFOLD
PCE ASSY 06-0005-10
③
⑤
②
(2X)
①
④
⑥

NOTES:

1. SEE 04-0002 WIRE LIST - JASPER JOWLS AIRLINES FOR TUBING USEAGE.

FOR USE BY PIZZA TIME THEATRE, INC.® ONLY

PROPRIETARY INFORMATION
PIZZA TIME THEATRE, INC.®

Chuck E. Cheese's
Pizza Time Theatre

Q.A.	REV DATE.
ORIGINATOR Barriel	APPROVAL QA Barriel
APPROVAL ENG	APPROVAL MFG.

QUALITY ASSURANCE OPERATING PROCEDURE

Title: WIRE LIST - JASPER T. JOWLS AIRLINES

WORKMANSHIP STANDARD

FROM - (SOL CONTROL)	TO	AIRLINE SIZE AND P/N
A (L1)	A	1/16" I.D. 740-0002
F (L2)	F	↕
G (L3)	G	
E (L4)	E	
B (L5)	B	
D (L6)	D	
H (L7)	H1	
C (L8)	C	
L	L & L1 (TEE)	
M	M & M1 (TEE)	
BP2	BP2	1/16" I.D. 740-0002
BP3	BP3	1/8" I.D. 740-0001

NOTES:

1. LABEL EACH END OF AIRLINE WITH WIRE MARKERS (PTT P/N 700-0076) USING LETTERS SPECIFIED IN TABLE.
2. USE P/N 13-0002, HARNESS BOARD-AIRLINE ASSYS TO CUT TUBING LENGTHS.

FOR USE BY PIZZA TIME THEATRE, INC.® ONLY

CHUCK E. CHEESE'S PIZZA TIME THEATRE

LIST OF MATERIALS

		REV
00	0088	B

ITEM	90	80	70	60	50	40	30	20	10	PART NUMBER	REFERENCE	DESCRIPTION	L/M
1									2	630-0005-01		PLASTIC AIR TEE 1/8"x1/8"x1/8"	—
2									3	630-0023-01		PLASTIC AIR TEE 1/16"x1/16"x1/16"	—
3									6'	740-0001-01		TUBING 1/4" OD x 1/8" ID	—
4									38'	740-0002-01		TUBING 1/8" OD x 1/16" ID	—
5									3'	760-0011-01		SPIRAL WRAP 1/4" OD	—
6									6'	760-0012-01		SPIRAL WRAP 1/2" OD	—
7									A/R	700-0076-01		INSTA-CODE WIRE MARKERS	—
							REF			04-0002-01		WIRE LIST - JASPER AIRLINES	—
							REF			13-0002-01		HARNESS BD. - AIRLINE ASSYS	—

PROPRIETARY INFORMATION
PIZZA TIME THEATRE, INC.®
FOR USE BY PIZZA TIME THEATRE, INC.® ONLY

	USED ON		
-10	00-0046-20	-60	
-20		-70	
-30		-80	
-40		-90	
-50			

ECO	REV
0633	A
0987	B

TITLE

JASPER JOWLS
AIRLINE ASSY

			REV
A	00	0088	B

SHT 2 OF 2

BISHOP GRAPHICS/ACCUPRESS
REORDER NO. A-9624

Chuck E. Cheese's Pizza Time Theatre

Q.A.

REV DATE

ORIGINATOR J Barrios

APPROVAL QA J Barrios

APPROVAL ENG. M. Crew

APPROVAL MFG.

QUALITY ASSURANCE OPERATING PROCEDURE

Title: MUNCH (STAGE) AIRLINE ASSEMBLY

WORKMANSHIP STANDARD

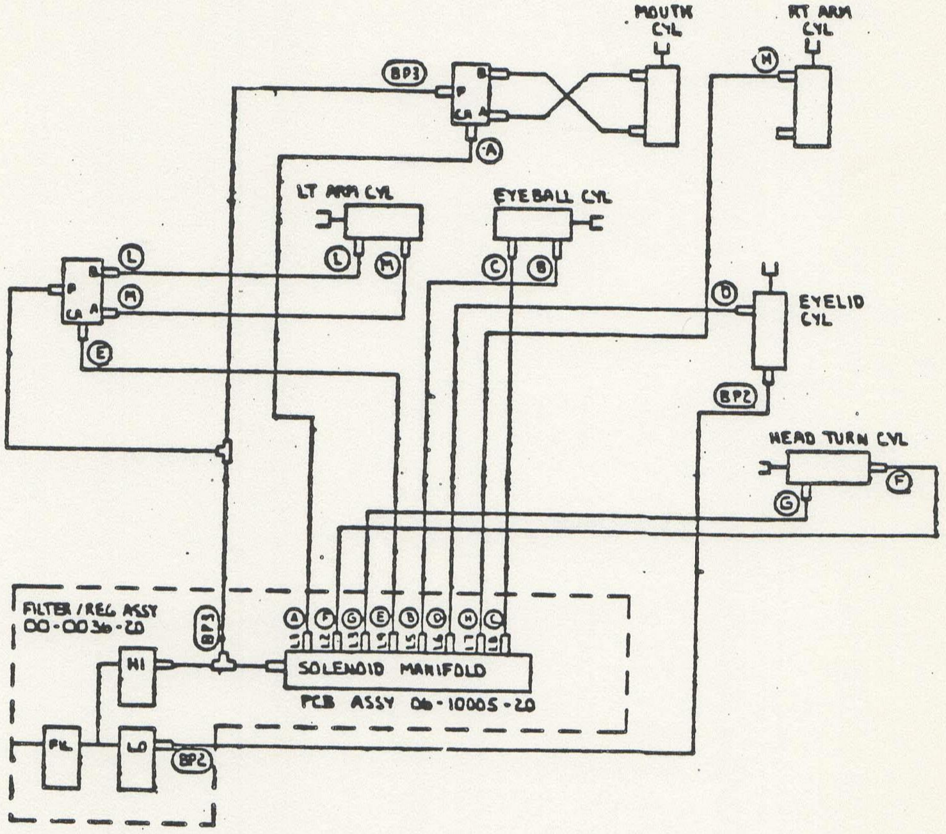
MOUTH CYL
RT ARM CYL
BP3
P
B
CA
A
Ⓐ
Ⓜ
LT ARM CYL
EYEBALL CYL
Ⓛ
Ⓜ
Ⓒ
Ⓑ
Ⓛ
Ⓜ
Ⓔ
Ⓓ
EYELID CYL
BP2
HEAD TURN CYL
Ⓖ
Ⓕ
FILTER / REG ASSY 00-0036-20
BP3
Ⓐ Ⓕ Ⓖ Ⓔ Ⓑ Ⓓ Ⓜ Ⓒ
SOLENOID MANIFOLD
PCB ASSY 06-10005-20
HI
FIL
LO
BP2

NOTES:

1. SEE DWG # 00-0324-10 MUNCH (STAGE) AIRLINE ASSY FOR TUBING USAGE.

FOR USE BY PIZZA TIME THEATRE, INC.®
ONLY

PROPRIETARY INFORMATION
PIZZA TIME THEATRE, INC.®

Chuck E. Cheese's Pizza Time Theatre

Q.A.	REV DATE
ORIGINATOR Barrial	APPROVAL QA Barrial
APPROVAL ENG. M.	APPROVAL MFG.

QUALITY ASSURANCE OPERATING PROCEDURE

Title: WIRE LIST - MUNCH AIRLINES

WORKMANSHIP STANDARD

FROM- (SOL CONTROL)	TO	AIRLINE SIZE AND P/N
A (L1)	A	1/16" I.D. 740-0002
F (L2)	F	↑ ↑ ↑
G (L3)	G	
E (L4)	E	
B (L5)	B	
D (L6)	D	
H (L7)	H	
C (L8)	C	
L.	L	
M	M	↓ ↓ ↓
BP2	BP2	1/16" I.D. 740-0002
BP3	BP3	1/8" I.D. 740-0001

NOTES:

1. LABEL EACH END OF AIRLINE WITH WIRE MARKERS (PTT P/N 700-0076) USING LETTERS SPECIFIED IN TABLE
2. USE P/N 13-0002, HARNESS BOARD - AIRLINE ASSYS TO CUT TUBING LENGTHS.

FOR USE BY PIZZA TIME THEATRE, INC.© ONLY

LIST OF MATERIALS

PIZZA TIME THEATRE

00-0229 A

ITEM	90	80	70	60	50	40	30	20	10	PART NUMBER	REFERENCE	DESCRIPTION	U/M
1									2	630-0005		PLASTIC AIR TEE 1/8"x1/8"x1/8"	—
2									6'	740-0001		TUBING 1/4" OD x 1/8" ID	—
3									32'	740-0002		TUBING 1/8" OD x 1/16" ID	—
4									3'	760-0011		SPIRAL WRAP 1/4" OD	—
5									6'	760-0012		SPIRAL WRAP 1/2" OD	—
6									A/R	700-0076		INSTA-CODE WIRE MARKER	—
							R	E	F	04-0008		WIRE LIST-MUNCH STAGE	—
							R	E	F	13-0002		HARNESS BD.-AIRLINE ASSYS	—

	USED ON		
-10	00-0046-70	-60	
-20		-70	
-30		-80	
-40		-90	
-50			

REV	ECO
A	0765

TITLE

MUNCH (STAGE)
AIRLINE ASSY

REV

A 00-0229-A

SHT 2 OF 2

BISHOP GRAPHICS/ACCUPRESS
REORDER NO. A-9624

Chuck E. Cheese's Pizza Time Theatre

Q.A.	REV DATE.
ORIGINATOR J. Barrios	APPROVAL QA J. Barrios
APPROVAL ENG M. Crow	APPROVAL MFG.

QUALITY ASSURANCE OPERATING PROCEDURE

Title: PASQUALLY (STAGE) AIRLINE ASSEMBLY

WORKMANSHIP STANDARD

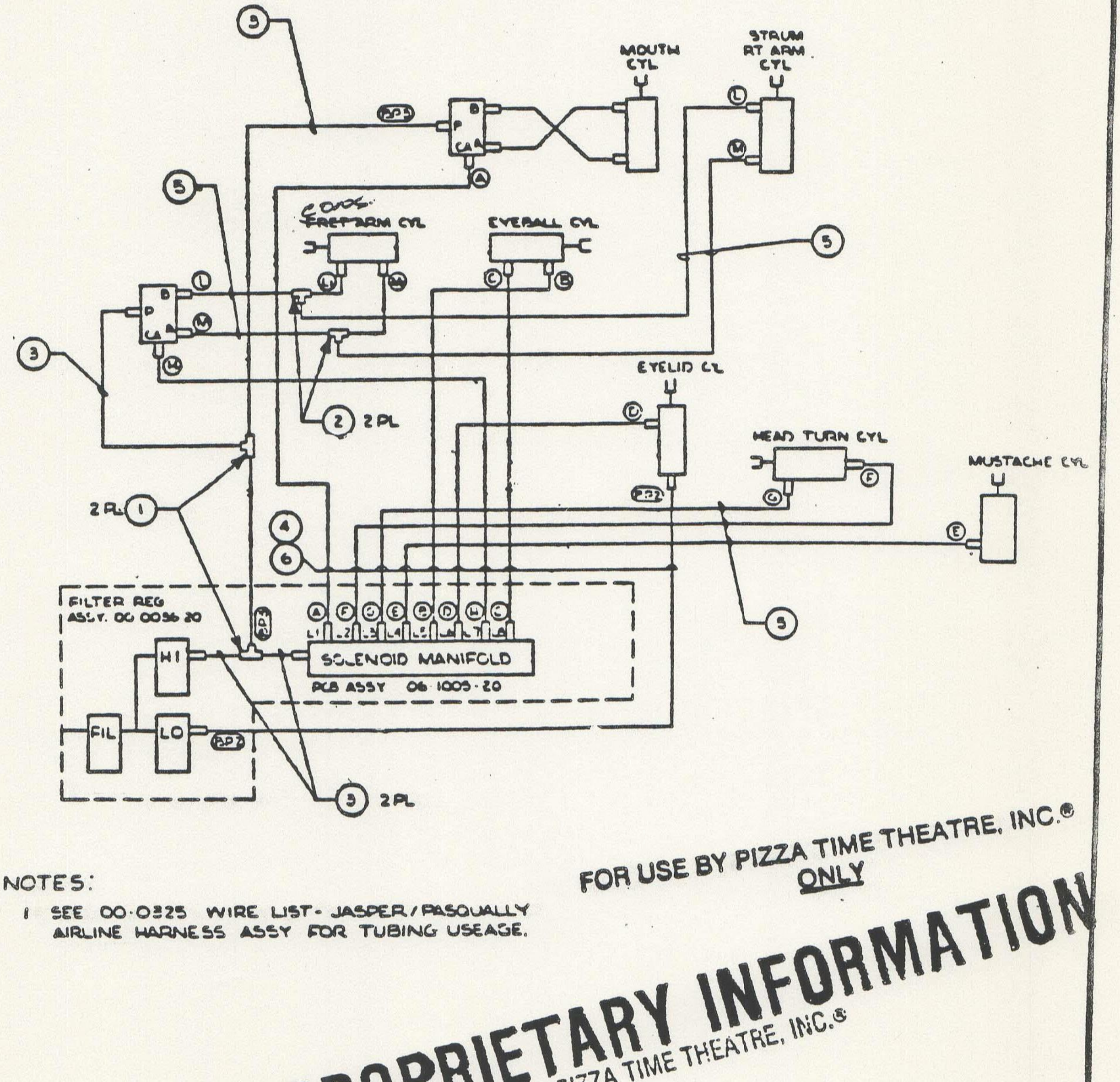

3
MOUTH CYL
STRUM RT ARM CYL
B
P
CA
A
L
M
5
CONDS
~~FRET ARM~~ CYL
EYEBALL CYL
C
B
L
M
5
3
H
2 2PL
EYELID CL
D
HEAD TURN CYL
F
G
MUSTACHE CYL
E
2PL 1
4
6
FILTER REG
ASSY. 00 0036 20
A F G E B D H C
L1 L2 L3 L4 L5 L6 L7 L8
SOLENOID MANIFOLD
PCB ASSY 06 1005 20
HI
FIL
LO
5
3 2PL

NOTES:
1 SEE 00-0325 WIRE LIST- JASPER/PASQUALLY AIRLINE HARNESS ASSY FOR TUBING USEAGE.

FOR USE BY PIZZA TIME THEATRE, INC.®
ONLY

PROPRIETARY INFORMATION
PIZZA TIME THEATRE, INC.®

Chuck E. Cheese's
Pizza Time Theatre

Q.A.	REV DATE.
ORIGINATOR	APPROVAL QA
APPROVAL ENG	APPROVAL MFG.

QUALITY ASSURANCE OPERATING PROCEDURE

Title: WIRE LIST - PASQUALLY (STAGE) AIRLINES

WORKMANSHIP STANDARD

FROM- (SOL CONTROL)	TO	AIRLINE SIZE AND P/N
A (L1)	A	1/16" I.D. 740-0002
F (L2)	F	↕
G (L3)	G	↕
E (L4)	E	↕
B (L5)	B	↕
D (L6)	D	↕
H (L7)	H1	↕
C (L8)	C	↕
L	L & L1 (TEE)	↕
M	M & M1 (TEE)	↕
BP2	BP2	1/16 I.D. 740-0002
BP3	BP3	1/8" I.D. 740-0001

NOTES:

1. LABEL EACH END OF AIRLINE WITH WIRE MARKERS (PTT P/N 700-0076), USING LETTERS SPECIFIED IN TABLE.
2. USE P/N 13-0002, HARNESS BOARD- AIRLINE ASSYS TO CUT TUBING LENGTHS.

FOR USE BY PIZZA TIME THEATRE, INC.® ONLY

LIST OF MATERIALS

CHUCK E. CHEESE'S PIZZA TIME THEATRE

REV

00-0228	A

ITEM	90	80	70	60	50	40	30	20	10	PART NUMBER	REFERENCE	DESCRIPTION	L/M
1									2	630-0005-		PLASTIC AIR TEE 1/8"x1/8"x1/8"	–
2									2	630-0023-		PLASTIC AIR TEE 1/16"x1/16"x1/16"	–
3									6'	740-0001-		TUBING 1/4" OD x 1/8" ID	–
4									35'	740-0002-		TUBING 1/8" OD x 1/16" ID	–
5									3'	760-0011-		SPIRAL WRAP 1/4" OD	–
6									6'	760-0012-		SPIRAL WRAP 1/2" OD	–
7									A/R	700-0076-		INSTA-CODE WIRE MARKERS	–
							R	E	F	04-0007-		WIRE LIST - PASQ. AIRLINES	–
							R	E	F	13-0002-		HARNESS BD. - AIRLINE ASSYS	–

	USED ON			ECO	REV
-10	00-0046-80	-70		0765	A
-20		-80			
-30		-90			
-40					
-50		-60			

FOR USE BY PIZZA TIME THEATRE, INC. ONLY

TITLE

PASQUALLY (STAGE)
AIRLINE ASSY

REV

A 00-0228-A

SHT 2 OF 2

BISHOP GRAPHICS/ACCUPRESS
REORDER NO. A-9624

A12. Electronics

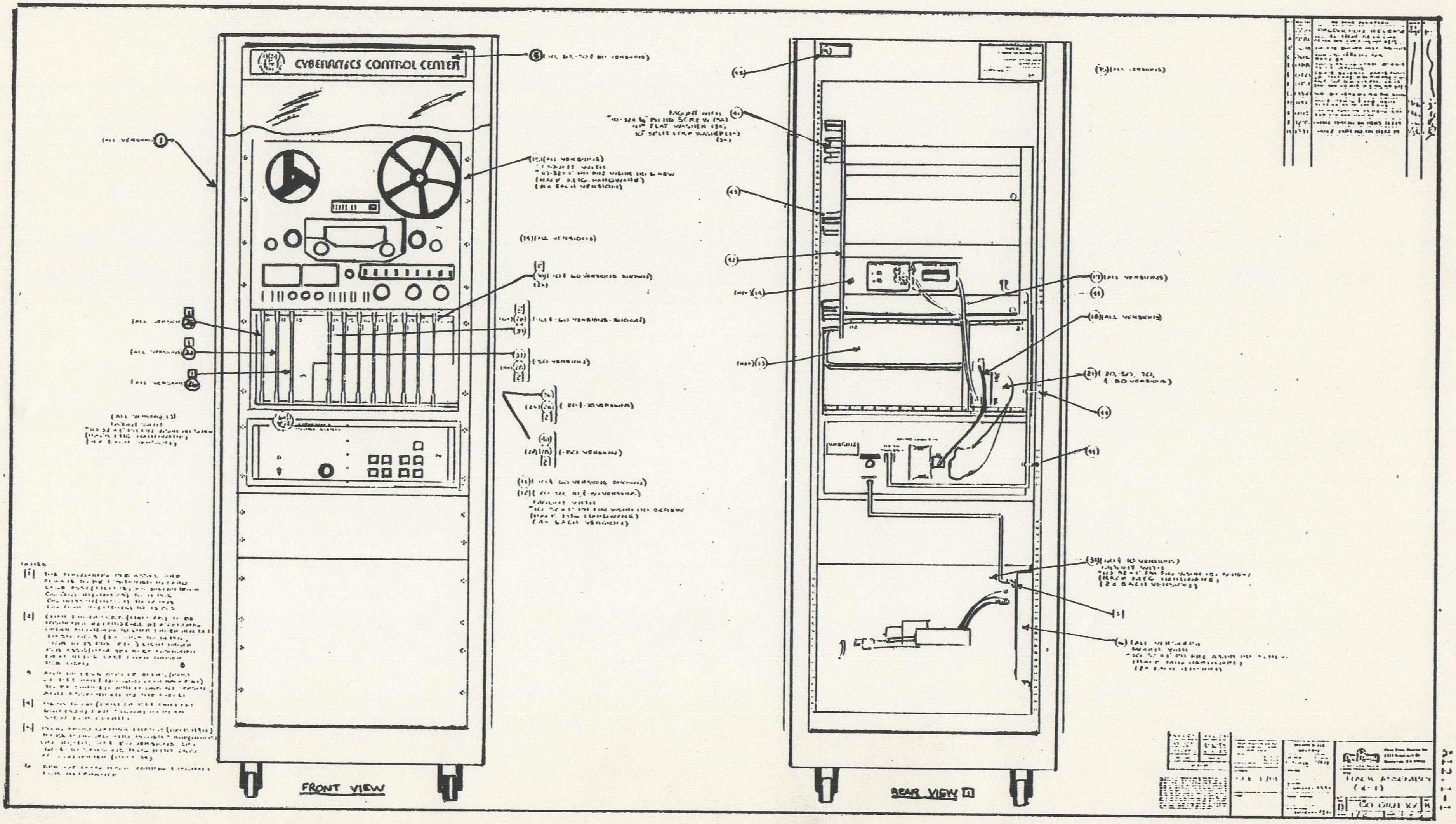
CYBERNETICS CONTROL CENTER
(14)(ALL VERSIONS)
FLAT WASHER
SPLIT LOCK WASHER
(ALL VERSIONS)
FRONT VIEW
REAR VIEW
RACK ASSEMBLY

LIST OF MATERIALS

	REV
00-0169	K

ITEM	90	80	70	60	50	40	30	20	10	PART NUMBER	REFERENCE	DESCRIPTION	L/M
1		1	1	1	1			1	1	660-0001-01		RACK ASSY - STANTRON	—
2										- -			
3										- -			
4										- -			
5		1	–	–	1			1	1	01-0118-01		C.E.C. HEADER LOGO	—
6										- -			
7										- -			
8										- -			
9										- -			
10										- -			
11		–	–	1	–			–	1	00-0012-10		CONTROL CHASSIS	YES
12		1	1	–	1			1	–	00-0012-20		CONTROL CHASSIS	YES
13		1	1	1	1			1	1	00-0168-10		CARD CAGE ASSY	YES
14		1	1	1	1			1	1	000-0297-10		TAPE DECK (X-7) MODIFIED	YES
15		1	1	1	1			1	1	700-0074-01		RACK MOUNTING KIT	—
16		1	1	1	1			1	1	550-0008-01		POWER STRIP	—
17										- -			
18		1	1	1	1			1	1	00-0014-10		D.C. POWER CABLE ASSY	YES
19		1	1	1	1			1	1	00-0167-10		TAPE CONTROL/AUDIO CABLE	YES
20										- -			
21		1	1	–	1			1	–	00-0007-20		CONTROL CONSOLE CABLE	YES
22		REF	REF	REF	REF			REF	REF	03-0006-01		WIRING DIAGRAM	—
23										+ +			

	USED ON		
-10	00-0123	-60	00-0230
-20	00-0180	-70	00-0232
-30		-80	00-0241
-40		-90	
-50	00-0186		

REV	—	A	B	C	D	E	F	G	H	I	J	K
ECO	0511	0581	0678	0696	0718	0721	0757	0868	1151	1203	1295	1331

TITLE

RACK ASSEMBLY
(X-7)

		REV
A	00-0169	K

SHT 2 OF 3

A12.1-2

LIST OF MATERIALS

	REV
00-0169	K

ITEM	90	80	70	60	50	40	30	20	10	PART NUMBER	REFERENCE	DESCRIPTION	L/M
24													
25		1	1	1	1			1	1	06-0020-10		TRANSPORT CNTL X-7 PCB	YES
26		1	1	1	1			1	1	06-0001-10		CPU PCB ASSY	YES
27		1	1	1	1			1	1	06-0033-10		AUDIO CNTL PCB ASSY	YES
28		2	2	6	4			2	6	06-0034-10		CHAR. DRIVER PCB ASSY	YES
29													
30													
31													
32													
33													
34		–	1	1	–			–	–	00-0209-10		240V AC CONV. ASSY	YES
35		1	1	1	1			1	1	01-0314-01		WARNING LABEL	–
36		–	1	–	–			1	–	00-0224-10		CHAR. HDR. SET - DOLLI	YES
37		–	–	–	1			–	–	00-0225-10		CHAR. HDR. SET - BEAG.	YES
38		–	–	2	–			–	2	06-0021-10		LIGHT DRIVER PCB	YES
39		–	–	1	–			–	1	00-1018-10		CHAR. HDR. SET - CYBER.	YES
40		1	–	–	–			–	–	00-0244-10		CHAR. HDR. SET - KING	YES
41		18"	18"	18"	18"			18"	18"	760-0033-01		WIRE DUCT 18"	–
42		18"	18"	18"	18"			18"	18"	760-0034-01		WIRE DUCT COVER 18"	–
43		1	1	1	1			1	1	001-0504-01		LABEL NEC CLASS 2	–
44		3	3	3	3			3	3	760-0001-01		CABLE TIE	–
45		1	1	1	1			1	1	001-0516-01		LABEL, UL, COMPUTER RACK 85oz	–

	USED ON		
-10	CYBER	-60	AUS. CYBER
-20	DOLLI/ARTIE	-70	AUS. CAB.
-30		-80	KING
-40		-90	
-50	BEAGLES		

REV

ECO

TITLE

RACK ASSEMBLY
(X-7)

		REV
A	00-0169	K

SHT 3 OF 3

A12.1-3

BISHOP GRAPHICS/ACCUPRESS
REORDER NO. A 9624

B	0515	ADDED ITEMS 2? THRU 28. NEW DRAWING	7/13/..	[illegible]
C	0611	ADDED (1) 3.2A FUSE P/N [illegible] AND (3) [illegible]	2-11-81	B.H
D	0109	[illegible] LABELS [illegible] FUSE [illegible] (1) [illegible] AND (3) [illegible]		
E	0136	ADDED 2 WARNING LABELS [illegible]	[illegible]	B.H
F	0840	[illegible] WIRING [illegible] AND FOR [illegible]	[illegible]	B.H
G	1106	CHANGE FUSE BLOCK [illegible] [illegible] 6-32 [illegible]	[illegible]	[illegible]

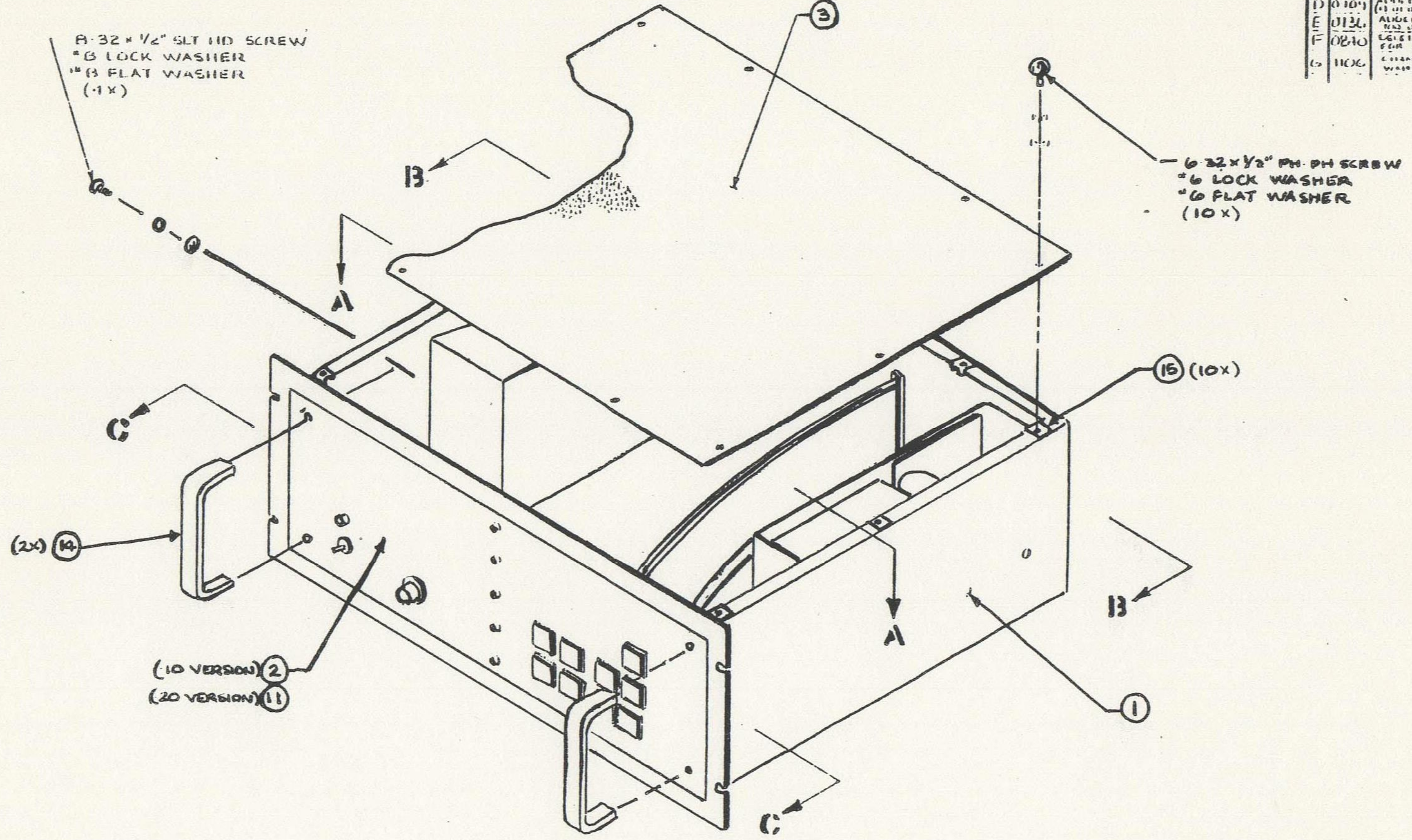

8-32 × 1/2" SLT HD SCREW
#8 LOCK WASHER
#8 FLAT WASHER
(4X)
3
B
A
6-32 × 1/2" PH-PH SCREW
#6 LOCK WASHER
#6 FLAT WASHER
(10X)
15 (10X)
C
(2X) 14
(10 VERSION) 2
(20 VERSION) 11
A
B
1
C

OUTSTANDING ECNs

OC DIG.1

DO NOT SCALE DRAWING

I. FORTE 1/10/81

MATERIAL
SEE T/M

Pizza Time Theatre Inc
10900 Bubb Road
Cupertino, CA 95014

CONTROL CHASSIS ASSEMBLY

D | 00-0012 | G

SCALE 1/2 SIZE | SHEET 1 of 5

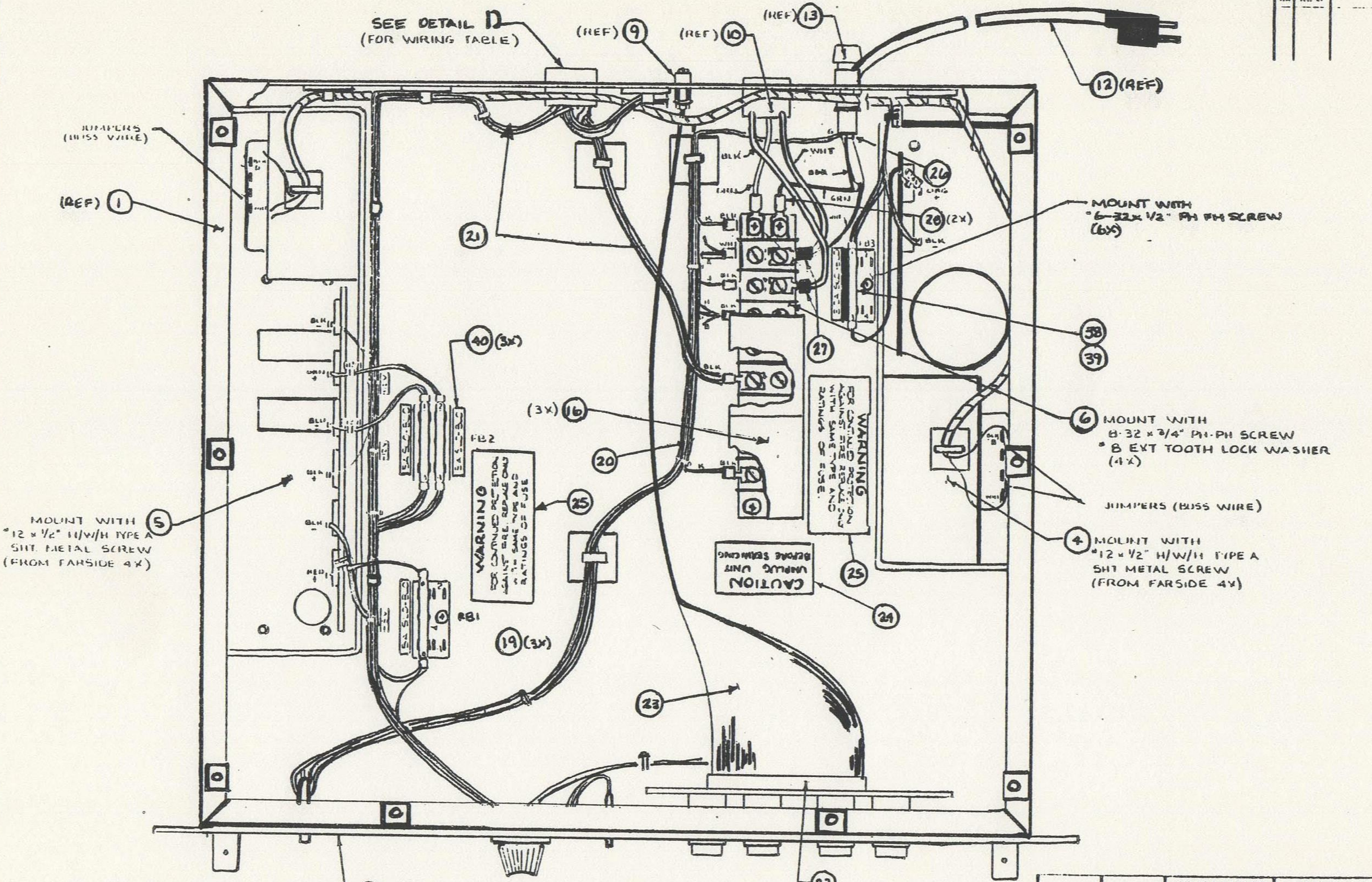
SEE DETAIL D
(FOR WIRING TABLE)
(REF) 9
(REF) 10
(REF) 13
12 (REF)
JUMPERS (BUSS WIRE)
(REF) 1
21
26
26 (2X)
MOUNT WITH
#6-32 x 1/2" PH FH SCREW
(6X)
38
39
27
40 (3X)
FB2
FB1
(3X) 16
20
25
19 (3X)
WARNING
FOR CONTINUED PROTECTION AGAINST FIRE REPLACE ONLY WITH SAME TYPE AND RATINGS OF FUSE.
CAUTION
UNPLUG UNIT BEFORE SERVICING
24
23
22
6 MOUNT WITH
#8-32 x 3/4" PH-PH SCREW
#8 EXT TOOTH LOCK WASHER
(4X)
JUMPERS (BUSS WIRE)
4 MOUNT WITH
#12 x 1/2" H/W/H TYPE A
SHT METAL SCREW
(FROM FARSIDE 4X)
MOUNT WITH 5
#12 x 1/2" H/W/H TYPE A
SHT METAL SCREW
(FROM FARSIDE 4X)
BLK
WHT
GRN
2 (REF)
11 (REF)

VIEW A-A
SCALE: FULL

OUTSTANDING ECNs

DO NOT SCALE DRAWING

MATERIAL
SEE L/M

Pizza Time Theatre Inc
10060 Bubb Road
Cupertino, CA 95014

TITLE
CONTROL CHASSIS
ASSEMBLY

SIZE D
DRAWING NO. 00-0012
REV G
SCALE 1/2 NOTED
SHEET 2 OF 5

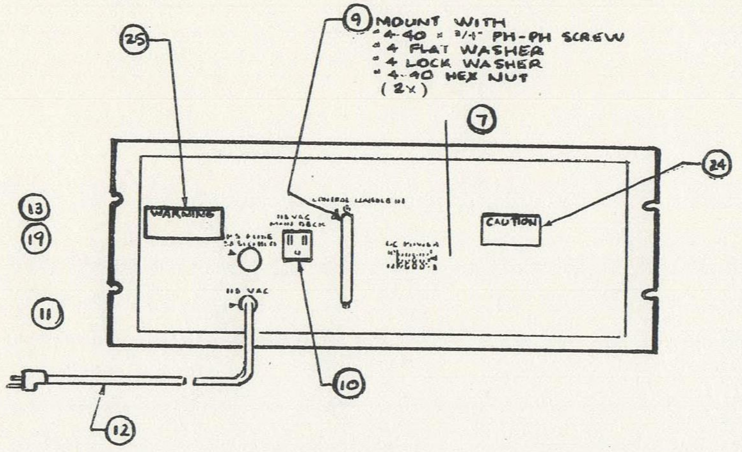
(9) MOUNT WITH
#4-40 × 3/4" PH-PH SCREW
#4 FLAT WASHER
#4 LOCK WASHER
#4-40 HEX NUT
(2X)
(25)
(7)
(24)
(13)
(19)
(11)
(12)
(10)
WARNING
CAUTION
115 VAC MINI DECK
115 VAC
CONTROL CONSOLE
DC POWER

VIEW B-B

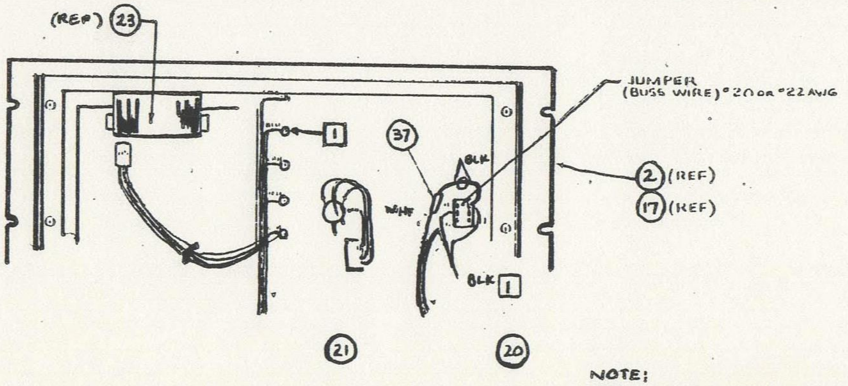
(REF) (23)
JUMPER (BUSS WIRE) #20 OR #22 AWG
(37)
BLK
WHT
BLK 1
1
(2) (REF)
(17) (REF)
(21)
(20)

NOTE:

1 USE SHRINK TUBING ON ALL WIRING ON SWITCHES. SHRINK TUBE ALL UNWIRED LEGS ON SWITCHES.

VIEW C-C

DETAIL D

WIRING DIAGRAM FOR ITEM (21) DC HARNESS ASSEMBLY

FROM			TO	
PART NUMBER	PIN # - OR TERMINAL POSITION	WIRE COLOR	PART NUMBER	PIN # - OR TERMINAL POSITION
550-0004	5	BLACK	100-0005	+12V (- TERM.)
550-0004	2	GREEN	830-0002	FB2-4
550-0004	8	BLUE	830-0002	FB2-3
550-0004	11	BLACK	100-0005	-12V (+ TERM.)
550-0004	7	BLACK	100-0005	+5V (- TERM.)
550-0004	10	BLACK	100-0005	+5V (- TERM.)
550-0004	1	RED	830-0002	FB1-3
550-0004	4	RED	830-0002	FB1-3
550-0004	3	ORANGE	830-0010	FB3-1
550-0004	6	ORANGE	830-0010	FB3-1
550-0004	12	BLACK	100-0004	+24V (- TERM.)
550-0004	9	BLACK	100-0004	+24V (- TERM.)
100-0005	+12V (- TERM.)	BLACK	580-0009	5
100-0005	-12V (+ TERM.)	BLACK	580-0009	5
100-0005	+5V (- TERM.)	BLACK	580-0009	5
100-0004	+24V (- TERM.)	BLACK	580-0009	5
100-0005	+12V (- TERM)	BLACK	TEST POINT	GND
830-0002	FB2-4	GREEN	TEST POINT	+12 VDC
830-0002	FB2-3	BLUE	TEST POINT	-12 VDC
830-0002	FB1-3	RED	TEST POINT	+5 VDC
830-0010	FB3-1	ORANGE	TEST POINT	+24 VDC
830-0002	FB1-1	RED	100-0005	+5V (+ TERM)
830-0002	FB2-1	BLUE	100-0005	-12V (- TERM)
830-0002	FB2-2	GREEN	100-0005	+12V (+ TERM)
830-0010	FB3-3	ORANGE	100-0004	+24V (+ TERM)

DO NOT SCALE DRAWING

SEE L/M

Pizza Time Theatre Inc
[illegible] Bubb Road
Cupertino, CA 95014

CONTROL CHASSIS ASSEMBLY

D 00-0012 G

½ NOTED 3 of 5

LIST OF MATERIALS

00-0012 REV G

ITEM	90	80	70	60	50	40	30	20	10	PART NUMBER	REFERENCE	DESCRIPTION	L/M
1								1	1	01-0071-01		CHASSIS FABRICATION	—
2								–	1	00-0021-10		FRONT PANEL ASSY	YES
3								1	1	01-0073-01		TOP COVER	—
4								1	1	700-0004-01		POWER SUPPLY - 24V	—
5								1	1	700-0005-01		POWER SUPPLY - LOGIC	—
6								1	1	580-0009-01		TERMINAL BLOCK - 8 POS	—
7								1	1	550-0004-01		CONN - 12 POS. - RECEPT.	—
8													
9								1	1	530-0013-01		50 PIN CONN. - PLUG	—
10								1	1	550-0010-01		AC RECPT. - SNAP IN - 3 WIRE	—
11								1	1	580-0010-01		STRAIN RELIEF	—
12								1	1	770-0006-01		AC LINE CORD	—
13								1	1	580-0033-01		FUSE HOLDER	—
14								2	2	580-0002-01		HANDLES	—
15								10	10	800-0010-01		"J" NUT #6-32	—
16								3	3	580-0014-01		TERM. BLOCK COVER	—
17								1	–	00-0021-20		FRONT PANEL ASSY	YES
18													
19								4	4	830-0002-01		FUSE 3AG 5AMP SLO BLO	—
20								1	1	00-0064-10		AC HARNESS ASSY	YES
21								1	1	00-0065-10		DC HARNESS ASSY	YES
22								1	1	530-0009-01		50 PIN CONN. - SOCKET	—
23								18"	18"	770-0002-01		50 COND. FLAT CABLE	—

	USED ON	
-10	00-0169-10	-60
-20	00-0169-20 -50	-70
-30		-80
-40		-90
-50		

REV	A	B	C	D	E	F	G
ECO	0303	0515	0671	0709	0736	0840	1106

TITLE

CONTROL CHASSIS ASSEMBLY

A 00-0012 REV G

SHT 4 OF 5

A12.2-4

Ⓟ BISHOP GRAPHICS/ACCUPRESS
REORDER NO. A 9624

LIST OF MATERIALS

	REV
00-0012	G

ITEM	90	80	70	60	50	40	30	20	10	PART NUMBER	REFERENCE	DESCRIPTION	L/M
24								2	2	700-0069-01		LABEL - CAUTION	—
25								3	3	700-0070-01		LABEL - WARNING	—
26								1	1	760-0013-01		QUICK CONNECT 3/16"	—
27								3	3	760-0015-01		SPADE LUG #8	—
28								2	2	760-0016-01		SPADE LUG #10	—
29													
30													
31													
32													
33													
34													
35													
36													
37								1	1	760-0017-01		BUTT SPLICE	—
38								1	1	830-0010-01		FUSE 3AG 3.2AMP SLO BL	—
39								1	1	01-0322-01		LABEL - FUSE IDENT. 3,2A	—
40								3	3	01-0322-02		LABEL - FUSE IDENT. 5A	—

	USED ON		
-10		-60	
-20		-70	
-30		-80	
-40		-90	
-50			

REV

ECO

TITLE

CONTROL CHASSIS
ASSEMBLY

		REV
A	00-0012	G

SHT 5 OF 5

A12.2-5

© BISHOP GRAPHICS/ACCUPRESS
REORDER NO. A 9524

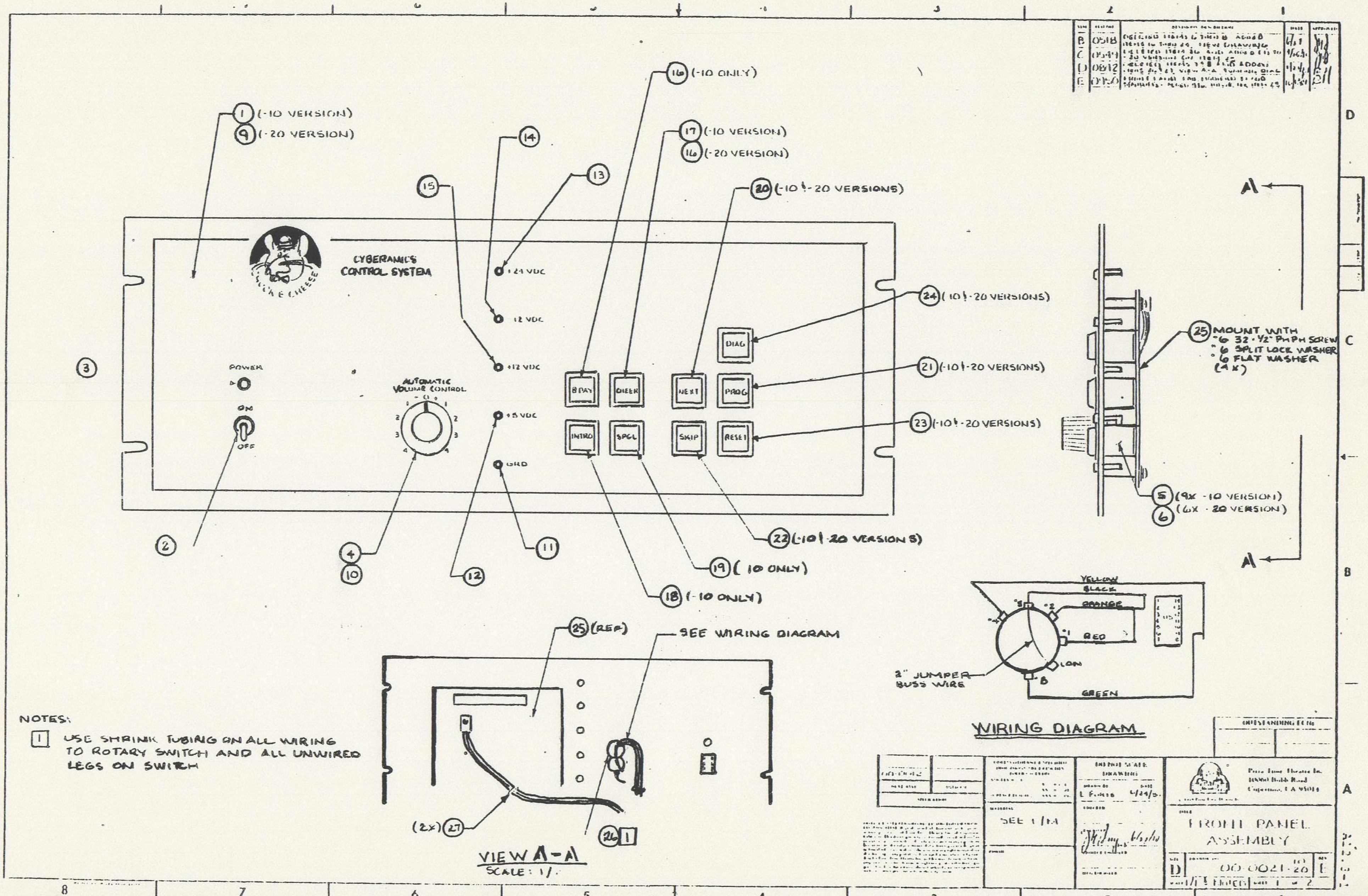

1 (-10 VERSION)
9 (-20 VERSION)
14
13
15
16 (-10 ONLY)
17 (-10 VERSION)
16 (-20 VERSION)
20 (-10 & -20 VERSIONS)
24 (-10 & -20 VERSIONS)
21 (-10 & -20 VERSIONS)
23 (-10 & -20 VERSIONS)
22 (-10 & -20 VERSIONS)
19 (-10 ONLY)
18 (-10 ONLY)
3
2
4
10
12
11
CYBERAMICS CONTROL SYSTEM
CHUCK E CHEESE
POWER
ON
OFF
AUTOMATIC VOLUME CONTROL
+24 VDC
-12 VDC
+12 VDC
+5 VDC
GND
DIAG
B DAY
CHEER
NEXT
PROG
INTRO
SPCL
SKIP
RESET
A
A
25 MOUNT WITH
#6 32 · 1/2" PHPH SCREW
#6 SPLIT LOCK WASHER
#6 FLAT WASHER
(4 X)
5 (9X -10 VERSION)
6 (6X -20 VERSION)
25 (REF)
SEE WIRING DIAGRAM
(2X) 27
26 1
VIEW A-A
SCALE: 1/1
YELLOW
BLACK
ORANGE
RED
LOW
GREEN
2" JUMPER BUSS WIRE
WIRING DIAGRAM
B 0518
C 0549
D 0812
E 0950
D
C
B
A
8
7
6
5
4
3
2
1

NOTES:

1. USE SHRINK TUBING ON ALL WIRING TO ROTARY SWITCH AND ALL UNWIRED LEGS ON SWITCH

OUTSTANDING ECN

DO NOT SCALE DRAWING

DRAWN BY L. FORBES 4/24/8.

SEE I/M

Pizza Time Theatre Inc.
15900 Bubb Road
Cupertino, CA 95014

FRONT PANEL ASSEMBLY

D 00-0021-10/20 E

1/1 SHEET 1 of 2

LIST OF MATERIALS

PIZZA TIME THEATRE

REV

00-0021 E

ITEM	90	80	70	60	50	40	30	20	10	PART NUMBER	REFERENCE	DESCRIPTION	I/M
1								-	1	01-0072-01		FRONT PANEL-CYBER.	—
2								1	1	570-0002-01		SWITCH, TOGGLE DPDT 6 AMP	—
3								1	1	840-0001-01		NEON LIGHT 115VAC W/RES.	—
4								1	1	570-0012-01		SWITCH, ROTARY, 10 POS BCD	—
5								6	9	570-0005-01		SWITCH, MOM PUSHBUTTON	—
6								6	9	840-0003-01		LAMP	—
7													
8													
9								1	-	01-0072-02		FRONT PANEL-DOLLI	—
10								1	1	580-0013-01		KNOB, CONTROL	—
11								1	1	580-0032-01		TEST POINT - BLACK	—
12								1	1	580-0028-01		TEST POINT - RED	—
13								1	1	580-0031-01		TEST POINT - ORANGE	—
14								1	1	580-0030-01		TEST POINT - BLUE	—
15								1	1	580-0029-01		TEST POINT - GREEN	—
16								1	1	01-0262-01		ENGRAVING SPEC - B'DAY	—
17								-	1	01-0262-02		ENGRAVING SPEC - CHEER	—
18								-	1	01-0262-03		ENGRAVING SPEC - INTRO	—
19								-	1	01-0262-04		ENGRAVING SPEC - SPCL	—
20								1	1	01-0262-05		ENGRAVING SPEC - NEXT	—
21								1	1	01-0262-06		ENGRAVING SPEC - PROG	—
22								1	1	01-0262-07		ENGRAVING SPEC - SKIP	—
23								1	1	01-0262-08		ENGRAVING SPEC - RESET	—

	USED ON		
		-60	
-10	00-0012-10	-70	
-20	00-0012-20	-80	
-30		-90	
-40			
-50			

REV	ECO
B	0518
C	0549
D	0842
E	0950

TITLE

FRONT PANEL
ASSEMBLY

REV

A 00-0021-E

SHT 2 OF 3

A12.3-

LIST OF MATERIALS

CHUCK E. CHEESE'S PIZZA TIME THEATRE

REV

00-0021 E

ITEM	90	80	70	60	50	40	30	20	10	PART NUMBER	REFERENCE	DESCRIPTION	L/M
24								1	1	01-0262-09		ENGRAVING SPEC - DIAG	—
25								1	1	06-0007-20		PCB ASSY	YES
26								1	1	750-0001-01		SHRINK TUBING	—
27								2	2	760-0007-01		TIE WRAP	—

	USED ON		
-10		-60	
-20		-70	
-30		-80	
-40		-90	
-50			

REV

ECO

TITLE

FRONT PANEL ASSEMBLY

REV

A 00-0021 E

SHT 3 OF 3

BISHOP GRAPHICS/ACCUPRESS
REORDER NO. A 9624

A13. Lighting

-	0571	RELEASE TO PRODUCTION		
A	0720	[illegible]		
B	0785	CREATE NEW [illegible] 20 VERSION LAMP CONTROL MOD ASSY		RH
C	0901	ADDED -30 VERSION (SHT 3 of 3)		
D	544	[illegible]		CB

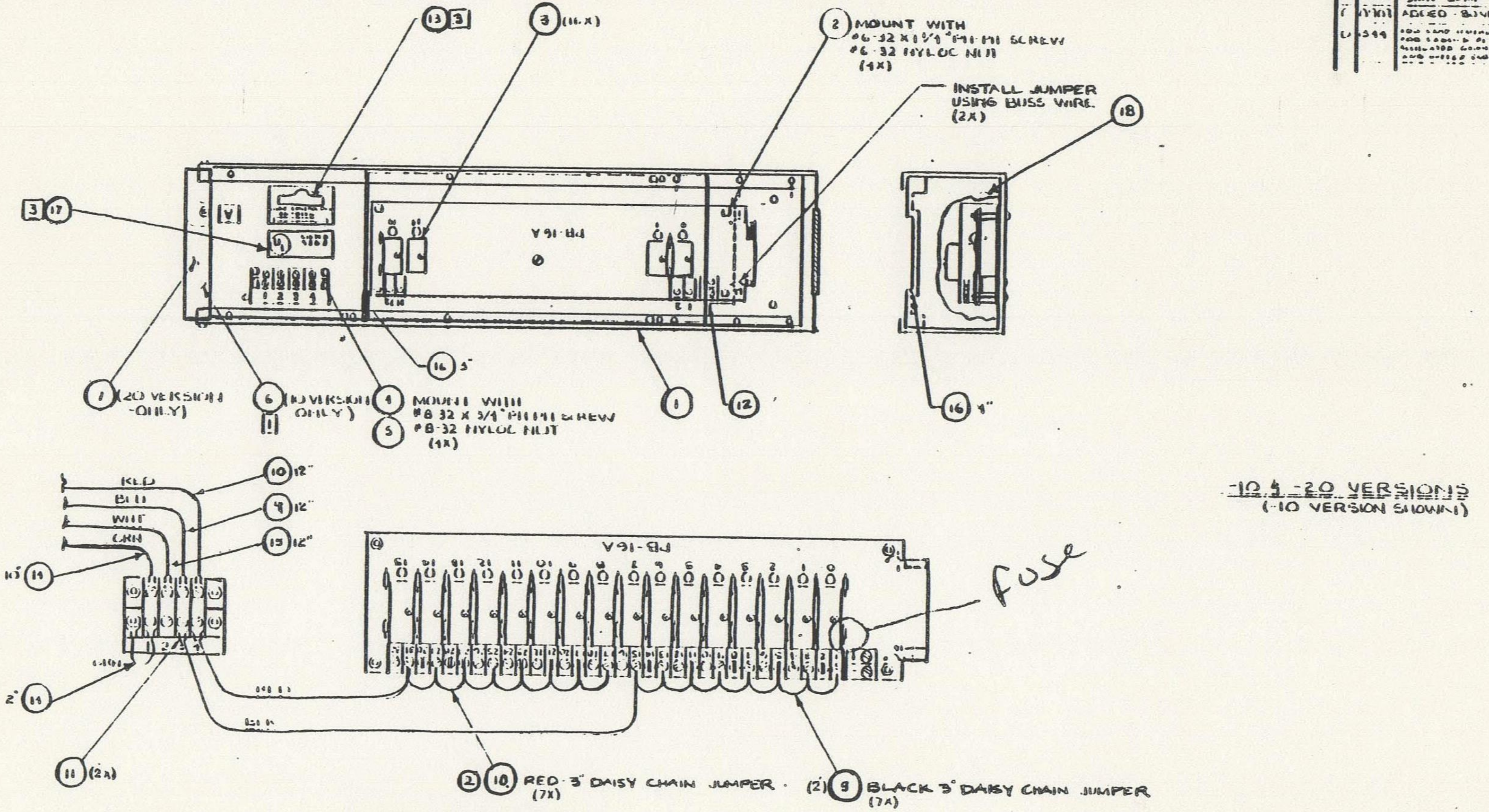
13
3
3 (16X)
2 MOUNT WITH
#6-32 X 1 1/4" PH-HI SCREW
#6-32 NYLOC NUT
(4X)
INSTALL JUMPER
USING BUSS WIRE
(2X)
18
3 17
PB-16A
1 (20 VERSION ONLY)
6 (10 VERSION ONLY)
1
4 MOUNT WITH
#8-32 X 3/4" PH-HI SCREW
5 #8-32 NYLOC NUT
(4X)
16 5"
1
12
16 4"
-10 & -20 VERSIONS
(-10 VERSION SHOWN)
RED
BLU
WHT
GRN
10 12"
4 12"
15 12"
10" 14
2" 14
11 (2X)
PB-16A
Fuse
2 10 RED 3" DAISY CHAIN JUMPER (7X)
(2) 9 BLACK 3" DAISY CHAIN JUMPER (7X)

WIRING DIAGRAM

NOTE:

1. USE SUPPLIED 8-32 FASTENERS TO MOUNT ON TO GUTTER. INSTALL REMAINING FASTENERS IN UNUSED CONNECTOR HOLES FOR FUTURE INSTALLATION.
2. ONE SWITCHING MOD (ITEM 3) TO BE SHIPPED WITH ASSY AS A SPARE ON -30 VERSION
3. PLACE ITEMS 13 & 17 ON SHT 1 OF 3 AND 2 OF 3 APPROX WHERE SHOWN ON INSIDE LAMP CONTROL [illegible] OF GABY

00-0264
00-0179
00-0178

DO NOT SCALE DRAWING

SEE P/L

Pizza Time Theatre Inc
1213 Innsbruck Dr
Sunnyvale, CA 94089

LAMP CONTROL MODULE ASSY

D 00-0176 D

NONE 1 of 3

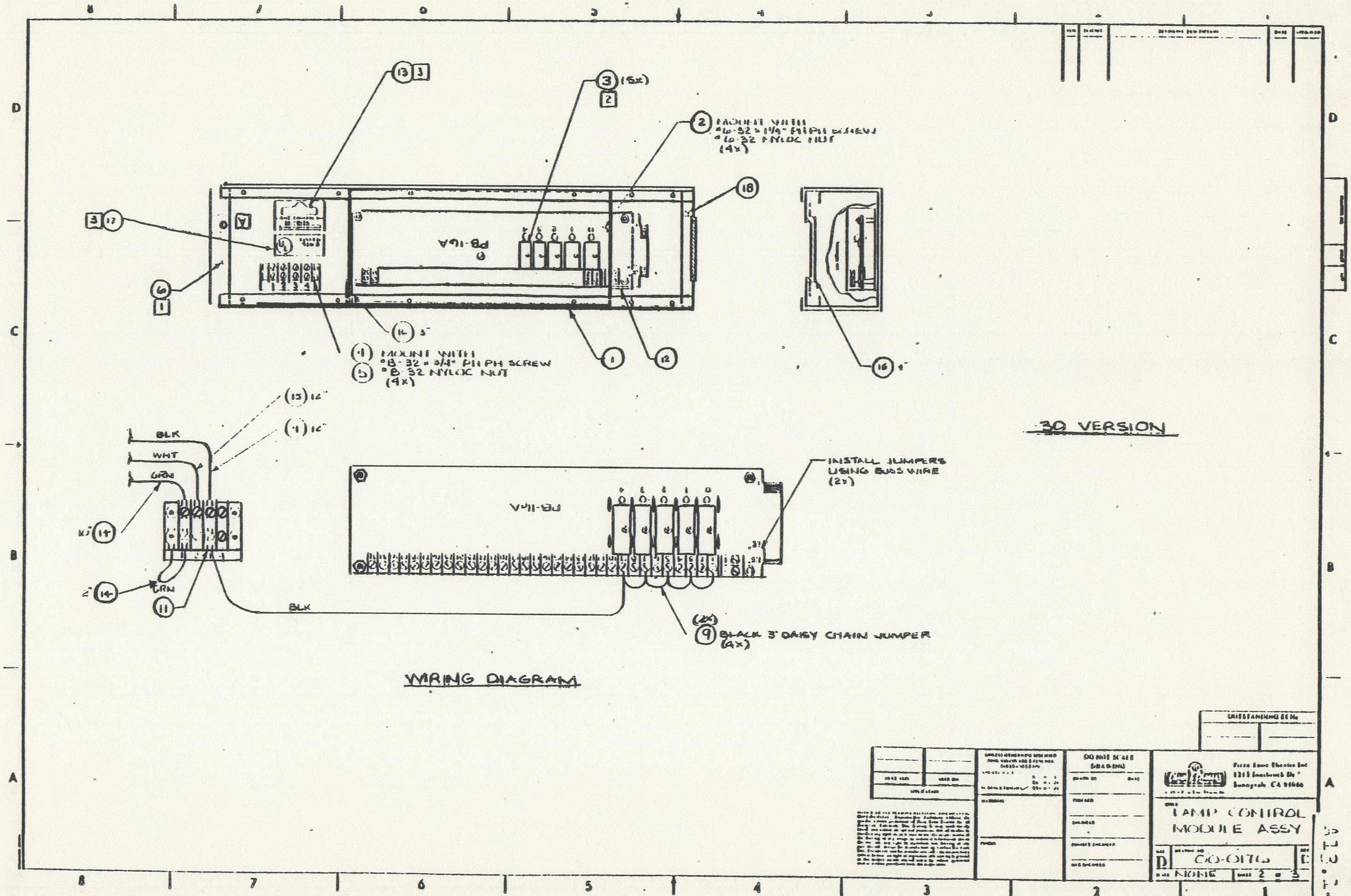
13 3
3 (5x)
2
2 MOUNT WITH
#6-32 x 1/4" PH PH SCREW
#6-32 NYLOC NUT
(4x)
18
3 17
6
1
PB-16A
14 3"
4 MOUNT WITH
#8-32 x 3/4" PH PH SCREW
5 #8-32 NYLOC NUT
(4x)
1
12
16 4"
15 12"
4 12"
BLK
WHT
GRN
12" 14
2" 14
GRN
11
BLK
PB-16A
INSTALL JUMPERS
USING BUSS WIRE
(2x)
(2x)
9 BLACK 3" DAISY CHAIN JUMPER
(4x)
WIRING DIAGRAM
3Q VERSION
DO NOT SCALE DRAWING
LAMP CONTROL
MODULE ASSY
D
60-0176
NONE
2 of 3
8
7
6
5
4
3
2
1
D
C
B
A

LIST OF MATERIALS

CHUCK E. CHEESE'S PIZZA TIME THEATRE

00-0176 REV D

ITEM	90	80	70	60	50	40	30	20	10	PART NUMBER	REFERENCE	DESCRIPTION	L/M
1							1	1	1	01-0287-01		LAMP CONTROL SECTION	—
2							1	1	1	700-0083-01	PB16A	16 POS. SWITCHING UNIT	—
3							6	16	16	700-0084-01		AC SWITCHING MOD. OAC24A	—
4							1	1	1	580-0047-01		TERM BLOCK 4 POS.	—
5							1	1	1	580-0048-01		MARKER STRIP	—
6							1	—	1	660-0031-01		GUTTER, CONNECTOR w/HDWR	—
7							—	1	—	660-0032-01		GUTTER, END CAP	—
8													
9							3'	3'	3'	770-0026-01		#14 AWG STRANDED THHN WIRE-	BLK
10							—	3'	3'	770-0026-02		#14 AWG STRANDED THHN WIRE-	RED
11							6	8	8	760-0016-01		SPADE LUG #10	—
12							1	1	1	001-0534-01		PANEL-LAMP CONTROL DIVIDER	-
13							1	1	1	001-0561-01		LABEL-LIGHT CONTROL MODULE	-
14							1'	1'	1'	770-0026-03		#14 AWG STRANDED THHN WIRE-GRN	-
15							1'	1'	1'	770-0026-04		#14 AWG STRANDED THHN WIRE-WHT	-
16							7"	7"	7"	760-0035-01		ALLIGATOR GROMMET -.052	-
17							1	1	1	001-0545-01		LABEL-UL LIGHT BAR ASSY	—
18							1	1	1	001-0549-01		GUTTER END CAP W/CUT OUT	

	USED ON	
-10	00-0178	-60
-20	00-0179	-70
-30	00-0264	-80
-40		-90
-50		

REV	-	A	B	C	D
ECO	0574	0730	0785	0907	1344

TITLE

LAMP CONTROL
MODULE ASSY

A 00-0176 REV D

SHT 3 OF 5

A13.1-

BISHOP GRAPHICS/ACCUPRESS
REORDER NO. A 9624

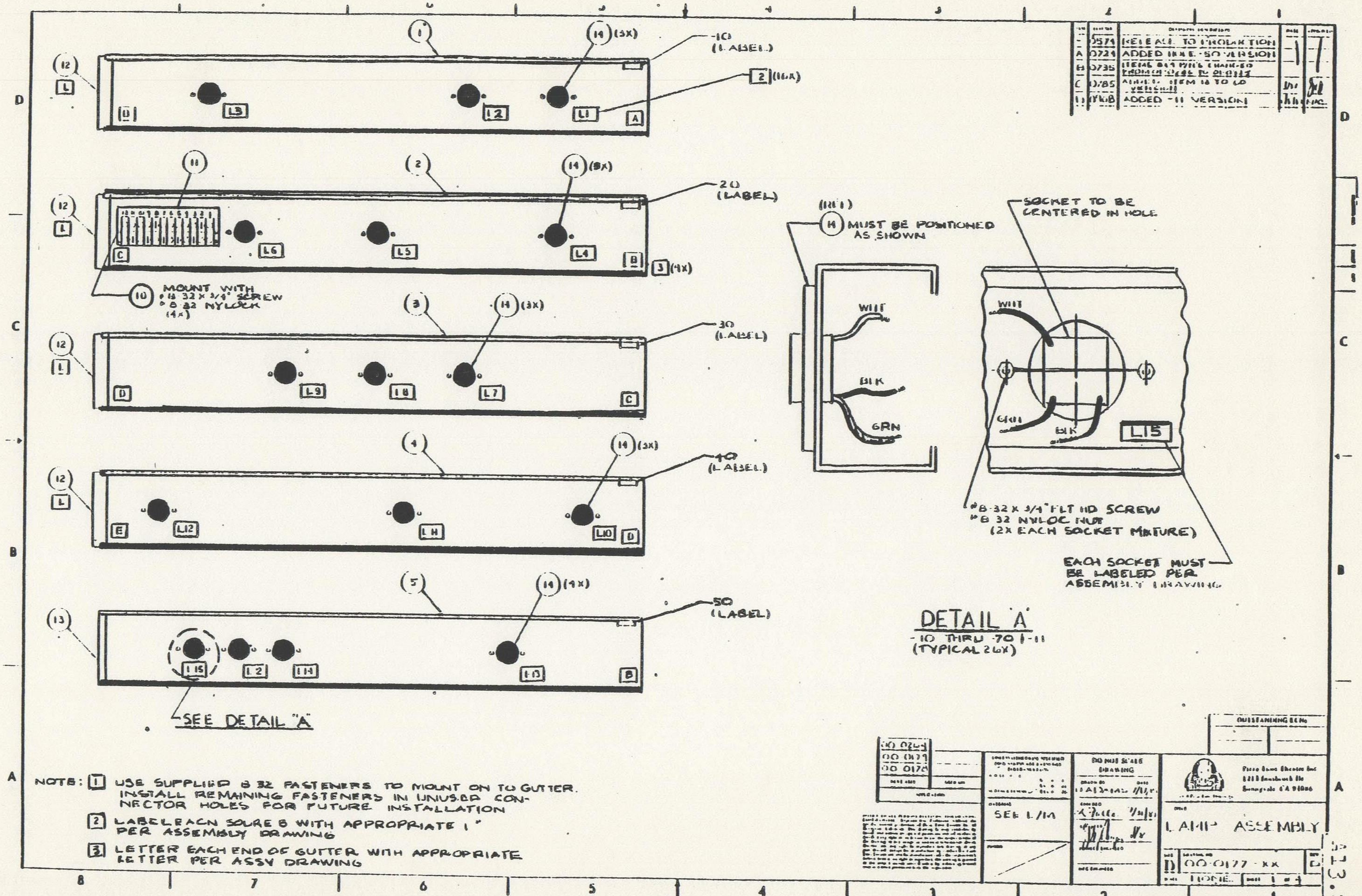
1
14 (3X)
-10 (LABEL)
2 (16X)
12
L
L1
L2
L3
A
2
11
14 (3X)
20 (LABEL)
C
L4
L5
L6
B
3 (4X)
10 MOUNT WITH #8 32 X 3/4" SCREW #8 32 NYLOCK (4X)
3
14 (3X)
30 (LABEL)
D
L7
L8
L9
C
4
14 (3X)
40 (LABEL)
E
L10
L11
L12
D
5
14 (4X)
50 (LABEL)
13
L13
L14
L2
L15
B
SEE DETAIL "A"
(REF)
14 MUST BE POSITIONED AS SHOWN
WHT
BLK
GRN
SOCKET TO BE CENTERED IN HOLE
WHT
GRN
BLK
L15
#8-32 X 3/4" FLT HD SCREW
#8 32 NYLOC NUT
(2X EACH SOCKET FIXTURE)
EACH SOCKET MUST BE LABELED PER ASSEMBLY DRAWING
DETAIL 'A'
-10 THRU -70 & -11
(TYPICAL 26X)
D
C
B
A
8
7
6
5
4
3
2
1

NOTE: 1 USE SUPPLIED 8 32 FASTENERS TO MOUNT ON TO GUTTER. INSTALL REMAINING FASTENERS IN UNUSED CONNECTOR HOLES FOR FUTURE INSTALLATION

2 LABEL EACH SOURCE WITH APPROPRIATE 1" PER ASSEMBLY DRAWING

3 LETTER EACH END OF GUTTER WITH APPROPRIATE LETTER PER ASSY DRAWING

-	0571	RELEASE TO PRODUCTION		
A	0724	ADDED ONE -50 VERSION		
B	0735	ITEMS 6-9 P/N'S CHANGED FROM 00-0265 TO 00-0311		
C	0785	ADDED ITEM 16 TO 60 VERSION		
D		ADDED -11 VERSION		

00 0264
00 0177
00 0178

SEE L/M

DO NOT SCALE DRAWING

LAMP ASSEMBLY

D 00-0177 -XX

NONE

1 of 1

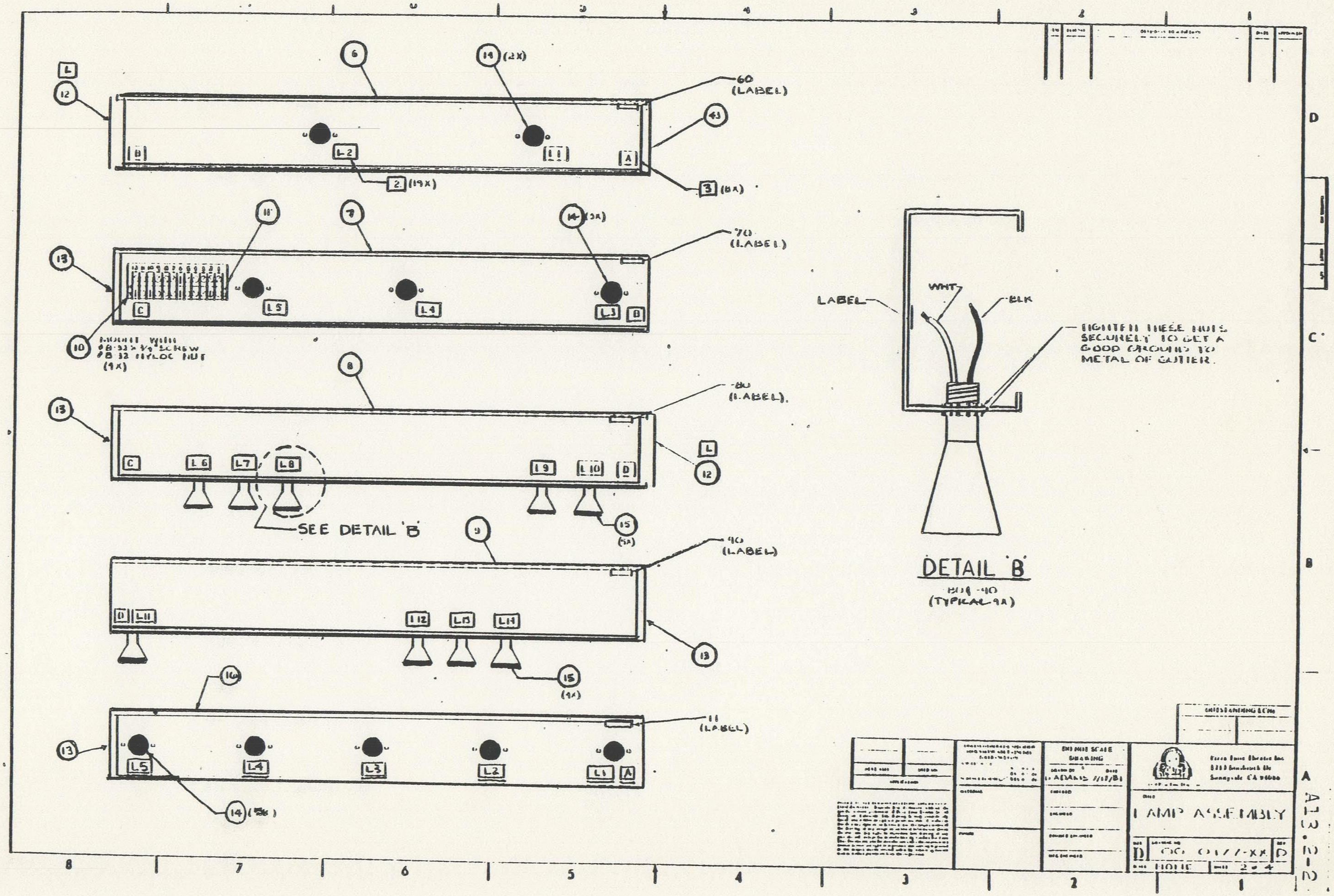
6
14 (2X)
L
12
60 (LABEL)
43
B
L2
L1
A
2 (19X)
3 (8X)
11
7
14 (3X)
13
70 (LABEL)
C
L5
L4
L3
B
10
MOUNT WITH #8-32 x 3/4 SCREW #8-32 NYLOC NUT (4X)
8
80 (LABEL)
C
L6
L7
L8
L9
L10
D
L
12
15 (5X)
SEE DETAIL 'B'
9
90 (LABEL)
D
L11
L12
L13
L14
13
15 (4X)
16
11 (LABEL)
13
L5
L4
L3
L2
L1
A
14 (5X)
LABEL
WHT
BLK
TIGHTEN THESE NUTS SECURELY TO GET A GOOD GROUND TO METAL OF GUTTER.
DETAIL 'B'
BOQ-40 (TYPICAL 9X)
DO NOT SCALE DRAWING
ADAMS 7/17/81
Pizza Time Theatre Inc
1213 Innsbruck Dr
Sunnyvale CA 94086
LAMP ASSEMBLY
D
OO 0177-XX
D
NONE
2 of 4
D
C
B
A
8
7
6
5
4
3
2
1

LIST OF MATERIALS

Chuck E. Cheese's Pizza Time Theatre

	REV
00-0177	D

ITEM	90	80	70	60	50	40	30	20	10	PART NUMBER	REFERENCE	DESCRIPTION	U/M
1	-	-	-	-	-	-	-	-	1	01-0286-01		LAMP SECTION - FRT. RT.	-
2	-	-	-	-	-	-	-	1	-	01-0286-02		- FT. RT. CNTR.	-
3	-	-	-	-	-	-	1	-	-	01-0286-03		- FT. CNTR.	-
4	-	-	-	-	-	1	-	-	-	01-0286-04		- FT. LT. CNTR.	-
5	-	-	-	-	1	-	-	-	-	01-0286-05		- FRT. LT.	-
6	-	-	-	1	-	-	-	-	-	01-0286-06		- FLOOD RT.	-
7	-	-	1	-	-	-	-	-	-	01-0286-07		- FLOOD LT.	-
8	-	1	-	-	-	-	-	-	-	01-0325-01		- SPOT RT.	-
9	1	-	-	-	-	-	-	-	-	01-0325-02		LAMP SECTION - SPOT LT.	-
10	-	-	1	-	-	-	-	1	-	580-0049-01		TERM BLK. - 12 POS	-
11	-	-	1	-	-	-	-	1	-	580-0050-01		MARKER STRIP	-
12	-	1	-	1	-	1	1	1	1	660-0031-01		GUTTER CONNECTOR	-
13	1	1	1	1	1	-	-	-	-	660-0032-01		GUTTER END CAP	-
14	-	-	3	2	4	3	3	3	3	700-0086-01		HALO LIGHT FIXTURE	-
15	4	5	-	-	-	-	-	-	-	700-0087-01		HUBBLE LIGHT FIXTURE	-
16	-	-	-	-	-	-	-	-	-	01-0286-08		LAMP SECTION - CAB	-

	USED ON		
-10	00-0178	-60	00-0179
-20	00-0178	-70	00-0179
-30	00-0178	-80	00-0179
-40	00-0178	-90	00-0179
-50	00-0178	-11	00-0264

REV	ECO
-	0574
A	0724
B	0735
C	0765
D	0908

TITLE

LAMP ASSY

		REV
A	00-0177	D

SHT 3 OF 4

A13.2-3

BISHOP GRAPHICS/ACCUPRESS

LIST OF MATERIALS

Chuck E. Cheese's Pizza Time Theatre

00-0177 REV D

ITEM	9↑	8↑	7↑	6↑	5↑	4↑	3↑	2↑	1↑	PART NUMBER	REFERENCE	DESCRIPTION	U/M
1									–	01-0286-01		LAMP SECTION- FRT. RT.	–
2									–	01-0286-02		- FT. RT. CNTR.	–
3									–	01-0286-03		- FT. CNTR	–
4									–	01-0286-04		- FT. LT. CNTR.	–
5									–	01-0286-05		- FT. LT.	–
6									–	01-0286-06		- FLOOD RT	–
7									–	01-0286-07		- FLOOD LT.	–
8									–	01-0325-01		- SPOT RT.	–
9									–	01-0325-02		LAMP SECTION- SPOT LT.	–
10									–	580-0049-01		TERM BLK - 12 POS.	–
11									–	580-0050-01		MARKER STRIP	–
12									–	660-0031-01		GUTTER CONNECTOR	–
13									1	660-0032-01		GUTTER END CAP	–
14									5	700-0086-01		HALO LIGHT FIXTURE	–
15									–	700-0087-01		HUBBLE LIGHT FIXTURE	–
16									1	01-0286-08		LAMP SECTION- CAB.	–
17									–	800-0074-01		CONDUIT, LOCK NUT	

	USED ON		
-10	00-0178	-60	00-0179
-20	00-0178	-70	00-0179
-30	00-0178	-80	00-0179
-40	00-0178	-90	00-0179
-50	00-0178	-11	00-0264

REV

ECO

TITLE

LAMP ASSY

A 00-0177 REV D

SHT 4 OF 4

BISHOP GRAPHICS/ACCUPRESS
REORDER NO. A 9624

213.2-4

	05/4	PRODUCTION RELEASE	1	1
A	1/23	[illegible]		
B	[illegible]	[illegible]	[illegible]	[illegible]
C	1345	[illegible]	[illegible]	[illegible]

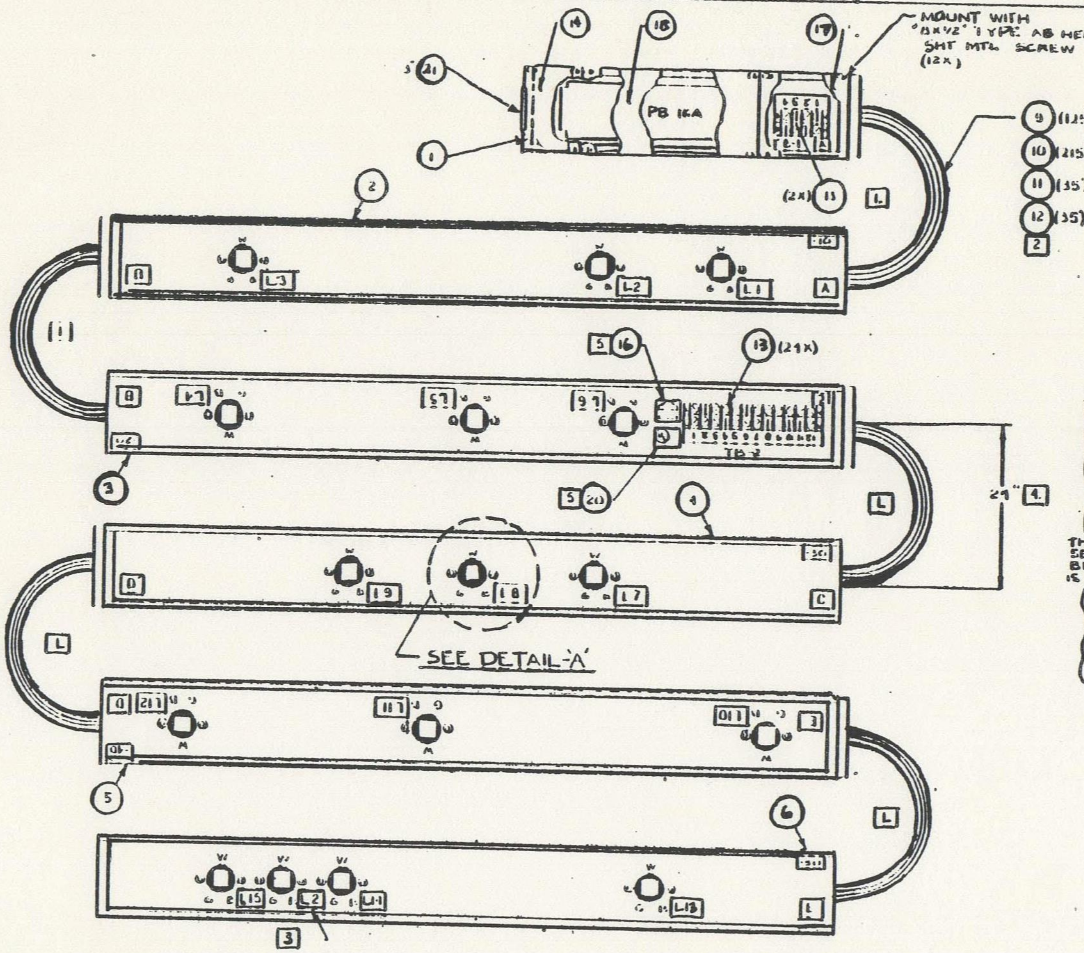

21
14
18
17
MOUNT WITH "8X1/2" TYPE AB HEX HD SHT MTL SCREW (12X)
PB 1KA
1
(2X) 13
L
9 (12')
10 (21')
11 (35')
12 (35')
2
2
L3
L2
L1
A
B
(1)
5 16
13 (21X)
L4
L5
L6
TB 2
3
5 20
4
L
24" 4.
L9
L8
L7
D
C
SEE DETAIL 'A'
L
L12
L11
L10
5
6
L
L15
L2
L14
L13
3

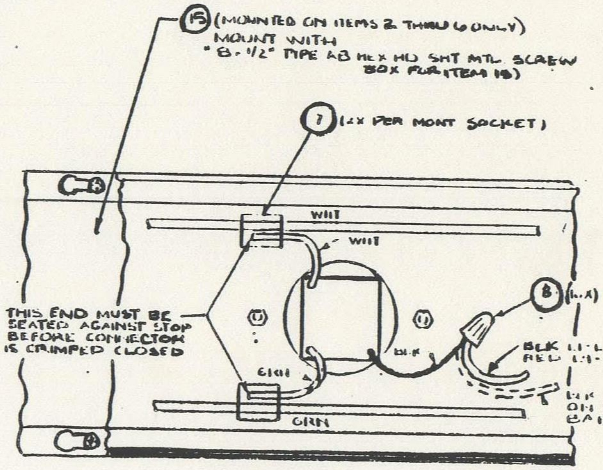

15 (MOUNTED ON ITEMS 2 THRU 6 ONLY)
MOUNT WITH
"8-1/2" TYPE AB HEX HD SHT MTL SCREW
BOX FOR ITEM 18)
7 (2X PER MONT SOCKET)
WHT
WHT
THIS END MUST BE SEATED AGAINST STOP BEFORE CONNECTOR IS CRIMPED CLOSED
8 (1-X)
BLK
BLK L1-L6
RED L11-L15
GRN
GRN
BAR

DETAIL 'A'

L2 ON 10 LIGHT BAR WILL HAVE 3 WIRES TO ITEM 8 ALL OTHER LIGHTS WILL HAVE ONLY 2 WIRES IN ITEM 8. SEE WIRING DIAGRAM, SHEET 2 OF 3.

NOTES:

1. ASSEMBLE LABELED ENDS A TO A, B TO B, C TO C, D TO D, AND L TO L
2. SEE WIRING DIAGRAM, (X) 0178 SHEET 2 OF 3, FOR WIRING OF LIGHTS & TERMINAL BLOCKS
3. L2 ON (X) 0178-30 LIGHT BAR IS WIRED WITH BLACK WIRE
4. WIRES FROM (X) 0178 200 TO (X) 0178 BOX MUST BE 24" LONG
5. PLACE ITEMS 16 & 20 APPROX WHERE SHOWN INSIDE LAMP ASSY 00 0177-20

00 0210 | 00 0230

SEE 1/M

DO NOT SCALE DRAWING

D ADAMS 7/21/81

SPOTLIGHT ASSY

D 00 0178 C

NONE 1 OF 3

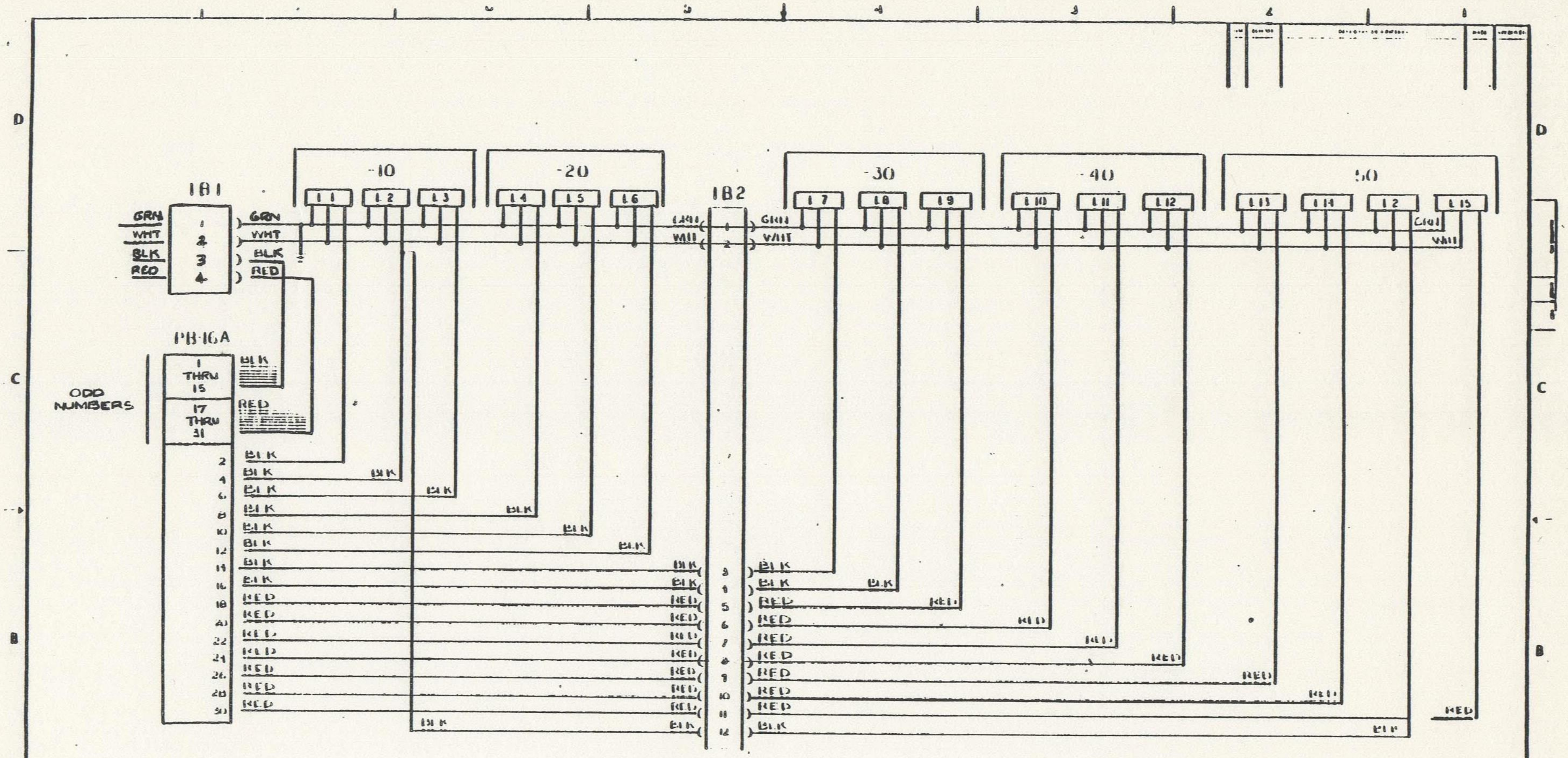

1B1
GRN
WHT
BLK
RED
1
2
3
4
PB-16A
ODD NUMBERS
1 THRU 15
17 THRU 31
BLK
RED
-10
-20
-30
-40
50
L1
L2
L3
L4
L5
L6
L7
L8
L9
L10
L11
L12
L13
L14
L15
1B2

WIRING DIAGRAM

SPOTLIGHT ASSY

D 00-0178 C

NONE 2 3

A13.3-2

LIST OF MATERIALS

CHUCK E. CHEESE'S PIZZA TIME THEATRE

00-0178 REV C

ITEM	90	80	70	60	50	40	30	20	10	PART NUMBER	REFERENCE	DESCRIPTION	L/M
1									1	00-0176-10		LAMP CONTROL MOD. ASSY	YES
2									1	00-0177-10		LAMP ASSY	YES
3									1	00-0177-20		↕ ↕	↕
4									1	00-0177-30		↕ ↕	↕
5									1	00-0177-40		↕ ↕	↕
6									1	00-0177-50		LAMP ASSY	YES
7									32	760-0029-01		TAP CONNECTOR	—
8									16	760-0028-01		#12 AWG WIRE NUTS	—
9									125'	770-0026-01		#14 AWG STRANDED THHN WIRE -	BLK
10									215'	770-0026-02		↕ ↕ ↕ ↕ -	RED
11									35'	770-0026-03		↕ ↕ ↕ ↕ -	GRN
12									35'	770-0026-04		#14 AWG STRANDED THHN WIRE -	WHT
13									26	760-0016-01		SPADE LUG #10	—
14										- -			
15									5	01-0401-01		LIGHT BAR COVER - 72"	—
16									1	01-0561-02		LABEL- LIGHT BAR SPOT	—
17									1	01-0536-01		COVER-LAMP CONTROL-3SECTION-1	—
18									1	01-0536-02		COVER-LAMP CONTROL-3SECTION-1	—
19									1	01-0536-03		COVER-LAMP CONTROL-3SECTION-1	—
20									1	01-0545-01		LABEL- UL LIGHT BAR ASSY	—
21									3"	760-0035-01		ALLEGATOR GROMMET-.052	—

	USED ON	
-10	00-0210 00-0230	70
-20		-80
-30		-90
-40		
-50		

-60

ECO	REV
0574	—
0723	A
0880	B
1345	C

TITLE

SPOTLIGHT ASSY

A 00-0178 REV C

SHT 3 OF 3

A13.3-3

BISHOP GRAPHICS/ACCUPRESS
REORDER NO. A 9624

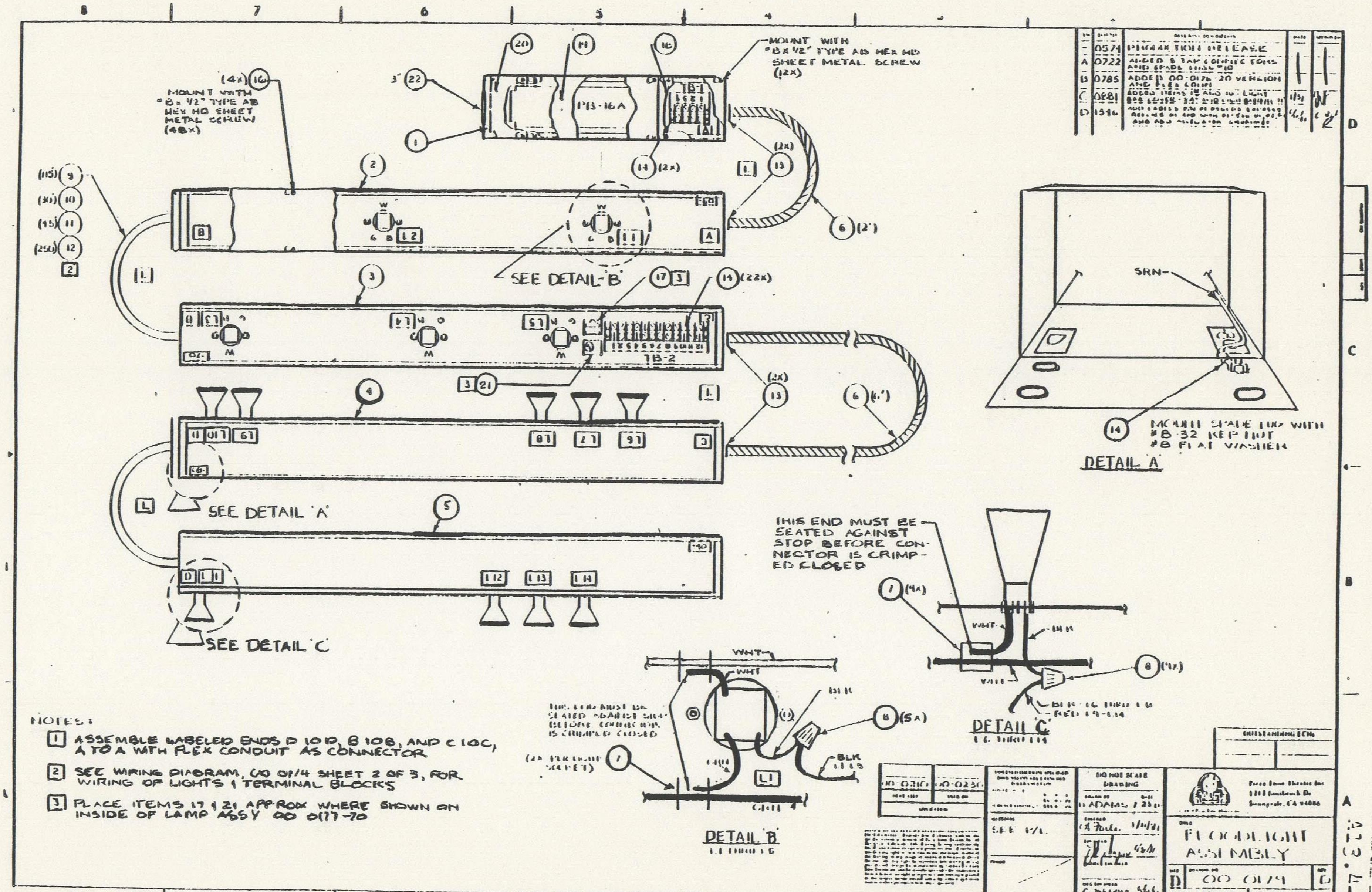
MOUNT WITH "8 x 1/2" TYPE AB HEX HD SHEET METAL SCREW (12x)
(4x) 16
MOUNT WITH "8 x 1/2" TYPE AB HEX HD SHEET METAL SCREW (48x)
20
19
18
22
1
PB-16A
TB-1
A
14 (2x)
(2x) 13
6 (2')
2
(115) 9
(30) 10
(15) 11
(250) 12
2
B
L2
L1
A
1
SEE DETAIL 'B'
3
17 3
14 (22x)
TB-2
M
L3
L4
L5
3 21
4
(2x) 13
6 (4')
1
C
L6
L7
L8
L9
L10
L11
1
SEE DETAIL 'A'
5
D
L11
L12
L13
L14
SEE DETAIL 'C'
SRN
14
MOUNT SPADE LUG WITH #8-32 KEP NUT #8 FLAT WASHER
DETAIL 'A'
THIS END MUST BE SEATED AGAINST STOP BEFORE CONNECTOR IS CRIMPED CLOSED
1 (9x)
WHT
BLK
8 (9x)
DETAIL 'C'
WHT
BLK
8 (5x)
1
L1
DETAIL 'B'
D
C
B
A
8
7
6
5
4
3
2
1

NOTES:

1. ASSEMBLE LABELED ENDS D TO D, B TO B, AND C TO C, A TO A WITH FLEX CONDUIT AS CONNECTOR
2. SEE WIRING DIAGRAM, 00 01/4 SHEET 2 OF 3, FOR WIRING OF LIGHTS & TERMINAL BLOCKS
3. PLACE ITEMS 17 & 21 APPROX WHERE SHOWN ON INSIDE OF LAMP ASSY 00 0177-70

-	0571	PRODUCTION RELEASE		
A	0722	ADDED 8 TAP CONNECTIONS AND SPADE [illegible]		
B	0785	ADDED 00-0176-20 VERSION AND FLEX COND		
C	0881	ADDED ITEMS [illegible] LIGHT [illegible]	1/31	WF
D	1946	[illegible]		

00-0210
00-0230

SEE P/L

DO NOT SCALE DRAWING

ADAMS

Pizza Time Theatre Inc
1213 Innsbruck Dr
Sunnyvale, CA 94086

FLOODLIGHT ASSEMBLY

D
00 0179
D
NONE
1 of 1

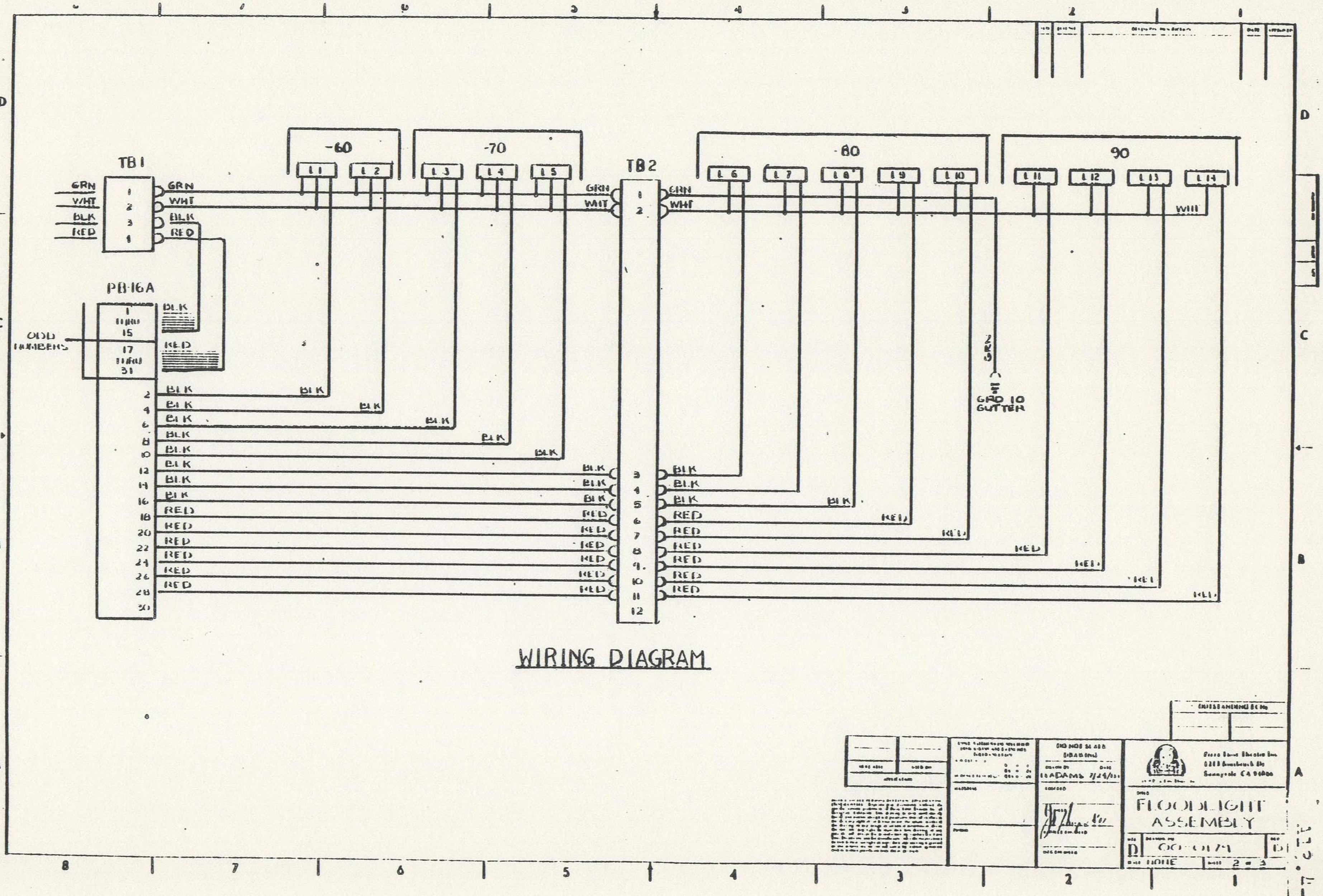
TB1
GRN
WHT
BLK
RED
PB-16A
1 THRU 15
17 THRU 31
ODD NUMBERS
-60
-70
-80
90
L1
L2
L3
L4
L5
L6
L7
L8
L9
L10
L11
L12
L13
L14
TB2
GRN
GRD TO GUTTER
FLOODLIGHT ASSEMBLY
DO NOT SCALE DRAWING
L ADAMS
SCALE NONE
SHEET 2 OF 3
D

WIRING DIAGRAM

LIST OF MATERIALS

CHUCK E. CHEESE'S PIZZA TIME THEATRE

00-0179 REV D

ITEM	90	80	70	60	50	40	30	20	10	PART NUMBER	REFERENCE	DESCRIPTION	U/M
1									1	0001762 0		LAMP CONTROL MOD-FLOODLT.	YES
2									1	000-177-60		LAMP ASSY	YES
3									1	000177-70		↕	↕
4									1	000177-80			
5									1	000177-90		LAMP ASSY	YES
6									8'	730000801		FLEX CONDUIT	—
7									19	7600029-01		TAP CONNECTOR	—
8									14	7600028-01		#12 AWG WIRE NUTS	—
9									115'	7700026-01		#14 AWG STRANDED THHN WIRE-BLK	
10									30'	770-0002603		#14 AWG STRANDED THHN WIRE-GRN	
11									45'	7700026-04		#14 AWG STRANDED THHN WIRE-WHT	
12									250'	7700026-02		#14 AWG STRANDED THHN WIRE-RED	
13									4	730-00009-01		FLEX CONNECTOR	—
14									25	760-0016-01		SPADE LUG #10	—
15													—
16									4	01-0401-01		LIGHT BAR COVER-72"	—
17									1	01-0561-03		LABEL-LIGHT BAR FLOOD	—
18									1	01-0536-01		COVER-LAMP CONTROL-3 SECTION-1	—
19									1	01-0536-02		COVER-LAMP CONTROL-3 SECTION-2	—
20									1	01-0536-03		COVER-LAMP CONTROL-3 SECTION-3	—
21									1	01-0545-01		LABEL-UL LIGHT BAR ASSY	
22									3"	760-0035-01		ALLEGATOR GROMMET -.052	—

	USED ON	
		-60
-10	88-8210 88-8230	-70
-20		-80
-30		-90
-40		
-50		

ECO	REV
0574	—
0722	A
0765	B
0881	C
1346	D

TITLE

FLOODLIGHT
ASSY

REV

A 00-0179 D

SHT 3 OF 3

A13.4-3

BISHOP GRAPHICS/ACCUPRESS
REORDER NO A 9624

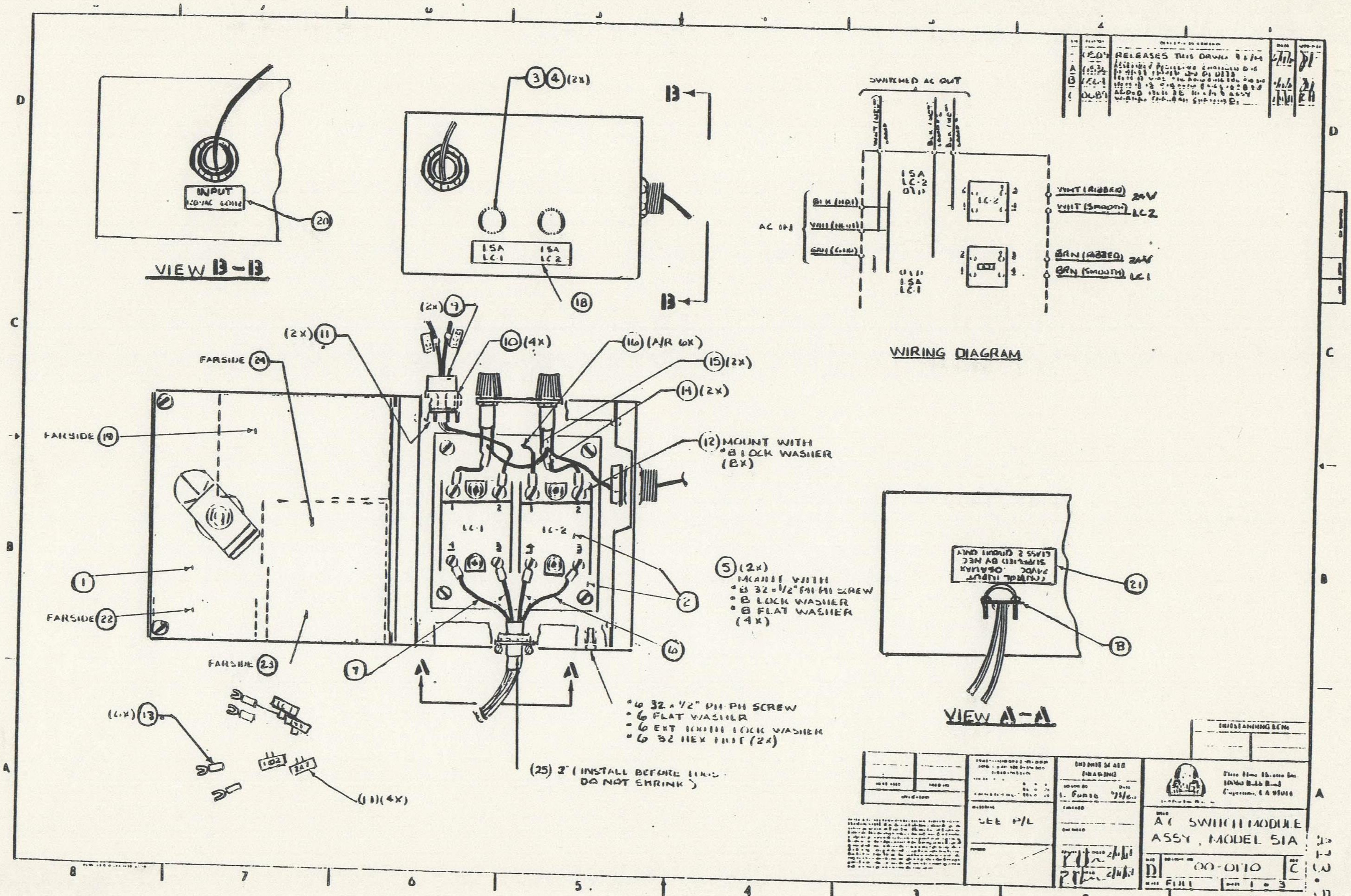
VIEW B-B
INPUT
120 VAC 60Hz
20
3 4 (2X)
B
B
1.5A LC-1
1.5A LC-2
18
SWITCHED AC OUT
1.5A
LC-2
1.5A
LC-1
BLK (HOT)
AC IN
WHT (NEUT)
GRN (GND)
LC-2
WHT (RIBBED) 24V
WHT (SMOOTH) LC2
BRN (RIBBED) 24V
BRN (SMOOTH) LC1
WIRING DIAGRAM
(2X) 9
(2X) 11
10 (4X)
16 (A/R 6X)
15 (2X)
14 (2X)
FARSIDE 24
FARSIDE 19
12 MOUNT WITH
• 8 LOCK WASHER
(8X)
LC-1
LC-2
1
FARSIDE 22
FARSIDE 23
5 (2X)
MOUNT WITH
• 8 32 x 1/2" PH-PH SCREW
• 8 LOCK WASHER
• 8 FLAT WASHER
(4X)
2
6
7
A
A
• 6 32 x 1/2" PH-PH SCREW
• 6 FLAT WASHER
• 6 EXT TOOTH LOCK WASHER
• 6 32 HEX NUT (2X)
(25) 3" (INSTALL BEFORE LUGS
DO NOT SHRINK)
(4X) 13
(11)(4X)
21
8
VIEW A-A
D
C
B
A
8
7
6
5
4
3
2
1

- RELEASES THIS DRAWING
A
B
C

OUTSTANDING ECNs

SEE P/L

S. Furio

AC SWITCH MODULE ASSY, MODEL 51A

D 00-0110 C

FULL 1 of 3

LIST OF MATERIALS

CHUCK E. CHEESE'S PIZZA TIME THEATRE

00-0170	REV	C

ITEM	90	80	70	60	50	40	30	20	10	PART NUMBER	REFERENCE	DESCRIPTION	L/M
1									1	01-0273-01		ENCLOSURE	—
2									1	01-0273-02		MOUNTING PLATE	—
3									2	580-0033-		FUSE HOLDER	—
4									2	830-0007-		FUSE 1.5 AMP 250V AGC	—
5									2	810-0006-		SOLID STATE RELAY	—
6									6'	770-0020-		2 COND #18 AWG 300V "BROWN"	—
7									6'	770-0021-		2 COND #18 AWG 300V "WHITE"	—
8									1	800-0075-		1/2" NPT SCREW CLAMP	—
9									2	730-0005-		1/2" NPT NIPPLE - STEEL	—
10									4	800-0075-		1/2" NPT LOCK NUT #141	—
11									2	760-0020-		1/2" NPT INSULATING BUSHING	—
12									8	760-0025-		#18 AWG RING LUG #8 SCREW	—
13									4	760-0015-		#14 AWG SPADE LUG	—
14									2	760-0013-		#18 AWG QUICK CONN 3/16"	—
15									2	760-0026-		#14 AWG QUICK CONN 3/16"	—
16									A/R	770-0004-01		#18 AWG BLK U/L TYPE 1015	—
17									6	760-0010-		FLAG MARKER TIE WRAP	—
18									1	01-0264-10		LABEL - 1.5A	—
19									1	01-0264-20		LABEL - SWITCH BOX	—
20									1	01-0264-30		LABEL - INPUT	—
21									1	01-0264-40		LABEL - CONTROL	—
22									1	01-0275-		LABEL - U/L	—
23									1	700-0070-		LABEL - WARNING	—

	USED ON		
-10	00-0210	-60	
-20		-70	
-30		-80	
-40		-90	
-50			

REV	—	A	B	C
ECO	0509	0536	0564	0687

TITLE

A.C. SWITCH MODULE
ASSY, MODEL 51A

			REV
A	00	0170	C

SHT 2 OF 3

BISHOP GRAPHICS/ACCUPRESS
REORDER NO A 9624

LIST OF MATERIALS

CHUCK E. CHEESE'S PIZZA TIME THEATRE

00-0170	C

ITEM	90	80	70	60	50	40	30	20	10	PART NUMBER	REFERENCE	DESCRIPTION	I/M
24									1	700-0080-		LABEL- HIGH VOLTAGE	—
25									2"	750-0003-		SHRINK TUBING - 3/8"	—

	USED ON		
-10		-60	
-20		-70	
-30		-80	
-40		-90	
-50			

ECO REV

TITLE

AC SWITCH MODULE
ASSY MODEL 51A

REV

A 00-0170 C

SHT 3 OF 3

A13.5-3

BISHOP GRAPHICS/ACCUPRESS
REORDER NO A 9624

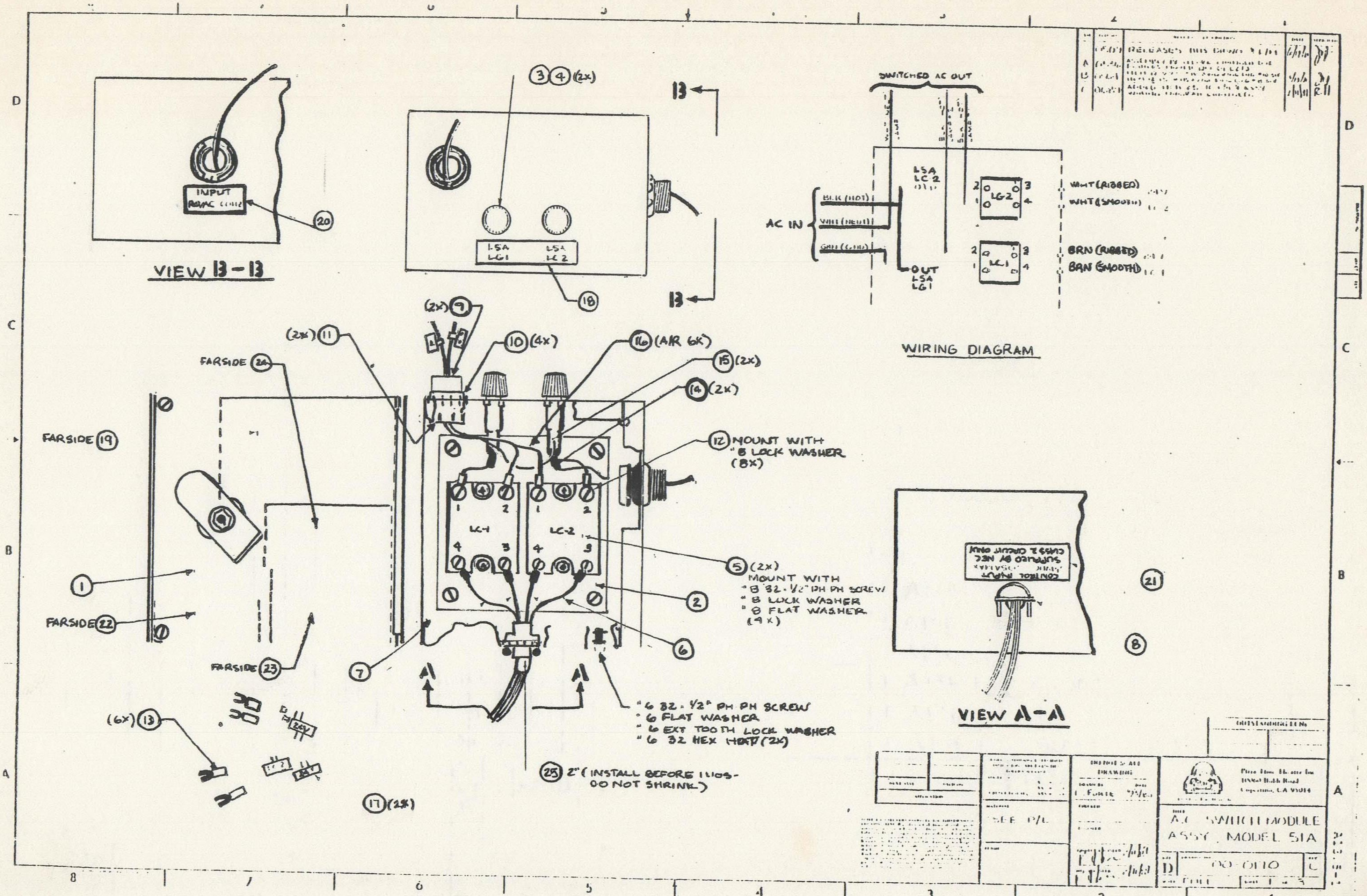
VIEW B-B
INPUT
RDAC CORD
20
B
B
③④(2X)
LSA LG1
LSA LG2
18
SWITCHED AC OUT
LSA
LG2
AC IN
BLK (HOT)
WHT (NEUT)
GRN (GND)
OUT
LSA
LG1
LG2
LG1
2
3
4
WHT (RIBBED)
WHT (SMOOTH)
BRN (RIBBED)
BRN (SMOOTH)
WIRING DIAGRAM
(2X) ⑨
(2X) ⑪
⑩ (4X)
⑯ (A/R 6X)
⑮ (2X)
⑭ (2X)
⑫ MOUNT WITH #8 LOCK WASHER (8X)
FARSIDE ㉔
FARSIDE ⑲
①
FARSIDE ㉒
FARSIDE ㉓
LC-1
LC-2
1
2
3
4
⑤ (2X) MOUNT WITH #8 32 - 1/2" PH PH SCREW #8 LOCK WASHER #8 FLAT WASHER (4X)
②
⑥
⑦
A
A
#6 32 - 1/2" PH PH SCREW
#6 FLAT WASHER
#6 EXT TOOTH LOCK WASHER
#6 32 HEX HEAD (2X)
(6X) ⑬
24V
㉕ 2" (INSTALL BEFORE 1110S - DO NOT SHRINK)
⑰ (2X)
CONTROL INPUT SUPPLIED BY NEC CLASS 2 CIRCUIT ONLY
㉑
⑧
VIEW A-A
RELEASED THIS DRAWING
A
B
C
OUTSTANDING ECN No
DO NOT SCALE DRAWING
L. FORTE
SEE P/L
A.C. SWITCH MODULE ASSY, MODEL 51A
D
00-0110
C
FULL
1 of 3
D
C
B
A
8
7
6
5
4
3
2
1

LIST OF MATERIALS

PIZZA TIME THEATRE

00-0170 REV C

ITEM	90	80	70	60	50	40	30	20	10	PART NUMBER	REFERENCE	DESCRIPTION	L/M
1									1	01-0273-01		ENCLOSURE	—
2									1	01-0273-02		MOUNTING PLATE	—
3									2	580-0033-		FUSE HOLDER	—
4									2	830-0007-		FUSE 1.5 AMP 250V AGC	—
5									2	810-0006-		SOLID STATE RELAY	—
6									6'	770-0020-		2 COND #18 AWG 300V "BROWN"	—
7									6'	770-0021-		2 COND #18 AWG 300V "WHITE"	—
8									1	800-0075-		1/2" NPT SCREW CLAMP	—
9									2	730-0005-		1/2" NPT NIPPLE - STEEL	—
10									4	800-0075-		1/2" NPT LOCK NUT #141	—
11									2	760-0020-		1/2" NPT INSULATING BUSHING	—
12									8	760-0025-		#18 AWG RING LUG #8 SCREW	—
13									4	760-0015-		#14 AWG SPADE LUG	—
14									2	760-0013-		#18 AWG QUICK CONN 3/16"	—
15									2	760-0026-		#14 AWG QUICK CONN 3/16"	—
16									A/R	770-0004-01		#18 AWG BLK U/L TYPE 1015	—
17									6	760-0010-		FLAG MARKER TIE WRAP	—
18									1	01-0264-10		LABEL - 1.5A	—
19									1	01-0264-20		LABEL - SWITCH BOX	—
20									1	01-0264-30		LABEL - INPUT	—
21									1	01-0264-40		LABEL - CONTROL	—
22									1	01-0275-		LABEL - U/L	—
23									1	700-0070-		LABEL - WARNING	—

	USED ON	
-10	00-0210	-60
-20		-70
-30		-80
-40		-90
-50		

ECO	REV
3508	-
0536	A
0564	B
0689	C

TITLE

A.C. SWITCH MODULE
ASSY, MODEL 51A

REV
A 00-0170 C

SHT 2 OF 3

A13.5-

LIST OF MATERIALS

PIZZA TIME THEATRE

00-0170 | C

ITEM	90	80	70	60	50	40	30	20	10	PART NUMBER	REFERENCE	DESCRIPTION	L/M
24									1	700-0080-		LABEL- HIGH VOLTAGE	—
25									2"	750-0003-		SHRINK TUBING - 3/8"	—

	USED ON		
-10		-60	
-20		-70	
-30		-80	
-40		-90	
-50			

ECO REV

TITLE

AC SWITCH MODULE
ASSY MODEL SIA

REV

A 00-0170 -C

SHT 3 OF 3

A13.5-3

BISHOP GRAPHICS/ACCUPRESS
REORDER NO. A 9624

ELECTRONIMATION
TRIAC ASSEMBLIES

ELECTRONIMATION TRIAC ASSEMBLIES

JOB OBJECTIVE:

Upon completion of training, the Technical Manager will be able to:

	TASKS	PREPARATION	COMPLETED
I.	State and demonstrate the operation of the three, eight-triac assemblies.	Section 2 Pages 40-41	________
II.	State and demonstrate the operation of the special effects (SE) twenty-triac assembly.	Section 2 Pages 40-41	________
III.	State and demonstrate the operation and adjustment of the house light triac assembly (house light dimmer board).	Section 2 Pages 40-41	________
IV.	State and demonstrate the operation and differences between the sign/organ driver boards and the eight-triac assemblies.	Section 2 Pages 42-44	________
V.	State and demonstrate the operation of the "L-3" breaker panel.	Section 2 Page 42	________
VI.	State and demonstrate the interconnections between the computer and the eight-triac assemblies, computer and character valve bank assemblies.	Section 2 Page 45	________
VII.	State and demonstrate the troubleshooting procedures for the eight triac assemblies.	Section 2 Page 45	________

____
Regional Technical Trainer

____
Technical Manager

Date: ______________________

Date: ______________________

THE EIGHT CIRCUIT TRIAC DRIVER BOX

There are four Eight Circuit Triac Driver Boxes and one Twenty Circuit Triac Driver Box. All of the boxes work identically. If you understand the operation of just one circuit, you only have to determine what function is inoperative and troubleshoot it like any of the other circuits.

On Page 5-009 of the Blue Show Manual there is a brief description of the operation of a triac circuit. On Page 5-066 of the Blue Show Manual there is a schematic of three of the circuits to show how they are identical.

Follow the diagram on Page 41 in this section. Each eight circuit triac board has its own 5 VDC power supply and also is individually breakered at the "L3" electrical panel. At the left of the diagram on the WHT/red wire, 24 VDC is present at all times when the computer is on. At point RED-1, YEL-2, or GRN-3, ground will be applied to the cathode of the optic coupler (TIL-113) whenever the Darlington transistor on the "LDB" is turned on. The base of the transistor in the optic isolator will turn on and will allow common to complete the 5 VDC circuit that turns on the triac and allows the 110 vac to turn on the function.

THE TWENTY CIRCUIT TRIAC BOX

The Twenty Circuit Triac Box is also known as the special effects ("SE" box). The functions can be found in the bit location chart on Page 5-046 in the Blue Show Manual. Electronically the circuit is the same as any other triac circuit. The configuration of the board is different. It uses two separate 5 VDC power supplies and also has two separate breakers in the "L3" electrical panel. The operation of the circuit was covered in the lesson, "Eight Circuit Triac Driver Box" on this page.

THE HOUSE LIGHT TRIAC ASSEMBLY

The house light triac circuit is identical to the other triac circuits. It looks the same and operates the same. In some ShowBiz systems the outputs of the triac board are connected directly to the house lights. In some newer ShowBiz systems the triac outputs are connected to a series of relays that energize to turn on more house lights that are used in larger ShowBiz systems.

The adjustment of the house lights has already been covered in the lesson House Light Dimmer Board in Sec. 2, Pages 27 and 28 of this manual. A troubleshooting guide can be found on Pages 4-105 and 4-106 in the Blue Show Manual. House light problems are also addressed on Pages 5-009 and 5-010 of the Blue Show Manual.

EIGHT CIRCUIT TRIAC DRIVER BOX

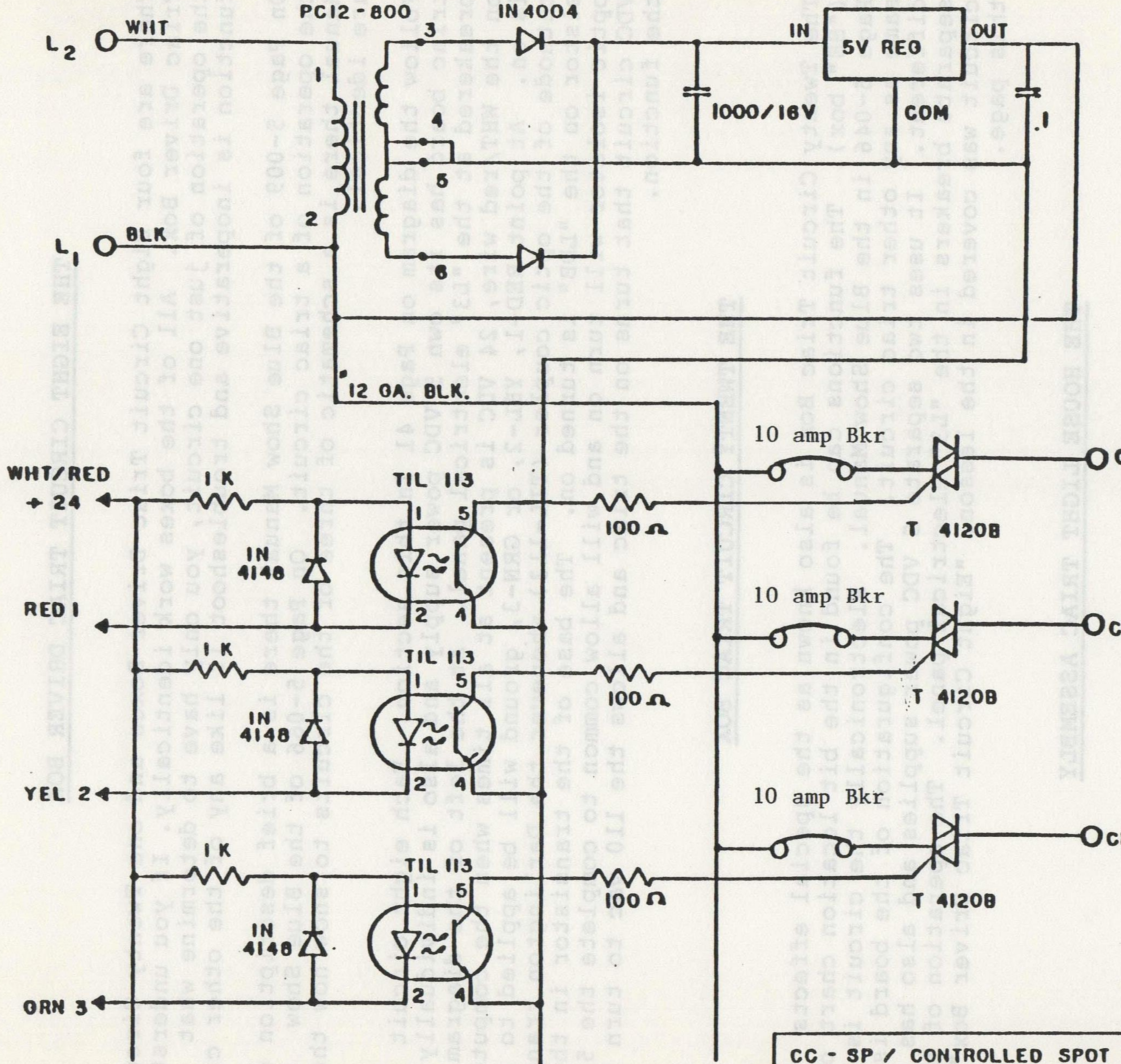
PC12-800
IN4004
LM341P-5
IN
5V REG
OUT
COM
1000/16V
.1
L2
WHT
L1
BLK
1
2
3
4
5
6
12 GA. BLK.
10 amp Bkr
10 amp Bkr
10 amp Bkr
CKT 1
CKT 2
CKT 3
T 4120B
T 4120B
T 4120B
WHT/RED
+ 24
RED 1
YEL 2
ORN 3
1 K
1 K
1 K
IN 4148
IN 4148
IN 4148
TIL 113
TIL 113
TIL 113
100 Ω
100 Ω
100 Ω
1
5
2
4

CC - SP / CONTROLLED SPOT LIGHTS

CC - CL / CONTROLLED CEILING FLOODS - S.L.

CC - HL / CONTROLLED HOUSE LIGHTS

CC - CS / CONTROLLED CEILING FLOODS - C.S./S.L

SIGN/ORGAN DRIVER BOARDS

The operation of the sign and organ boards is identical to the Eight Circuit Triac Driver Boards (see the lesson on Eight Circuit Triac Driver Boards on Pages 40 and 41 in this section). The components of the board have changed a little because of less current draw, and being less expensive to build.

One major difference on the board is the power supply. Refer to the schematics on Pages 43 and 44 in this section. Instead of using a 5VDC full wave rectifier, the sign/organ power supply is a 12 VDC half wave rectifier. The bottom line reason for this is cost of building. The other component differences are the 3K and 2K resistors and the lower current rated triac (2N6071A).

The organ board is located under Fatz's keyboard and has its own power switch and is fused. The sign driver board is located at the base of the sign behind Fatz. It also has its own power switch and is fused. Both boards are connected by a "Y" connector under the stage that in turn is connected to the rear of the top computer drawer.

Some general information on the sign/organ driver boards can be found on Page 5-008 in the Blue Show Manual. On Pages 5-054 through 5-062 in the Blue Show Manual wiring diagrams, board layouts, and cable pin-outs can be found. There is also a good troubleshooting guide on Pages 4-11 and 4-12 of the Blue Show Manual.

THE "L3" BREAKER PANEL

The "L3" panel is the main power panel for the entire show. A layout of the panel can be found on Page 5-074 of the Blue Show Manual. The layout indicates where the breakers should be located. Not all panels were installed exactly the same, but should be close. The important thing to know about the panel is that it is three phase. The phases are counted from top to bottom. On the left side, breakers 1, 3, 5, etc. are phased A, B, and C. On the right side the breakers are numbered 2, 4, 6, etc. The phases are also labeled A, B, C, A, B, C, all the way through the breaker panel. It is imperative to the operation of the house lights that the breakers to be on the same phase as the computer.

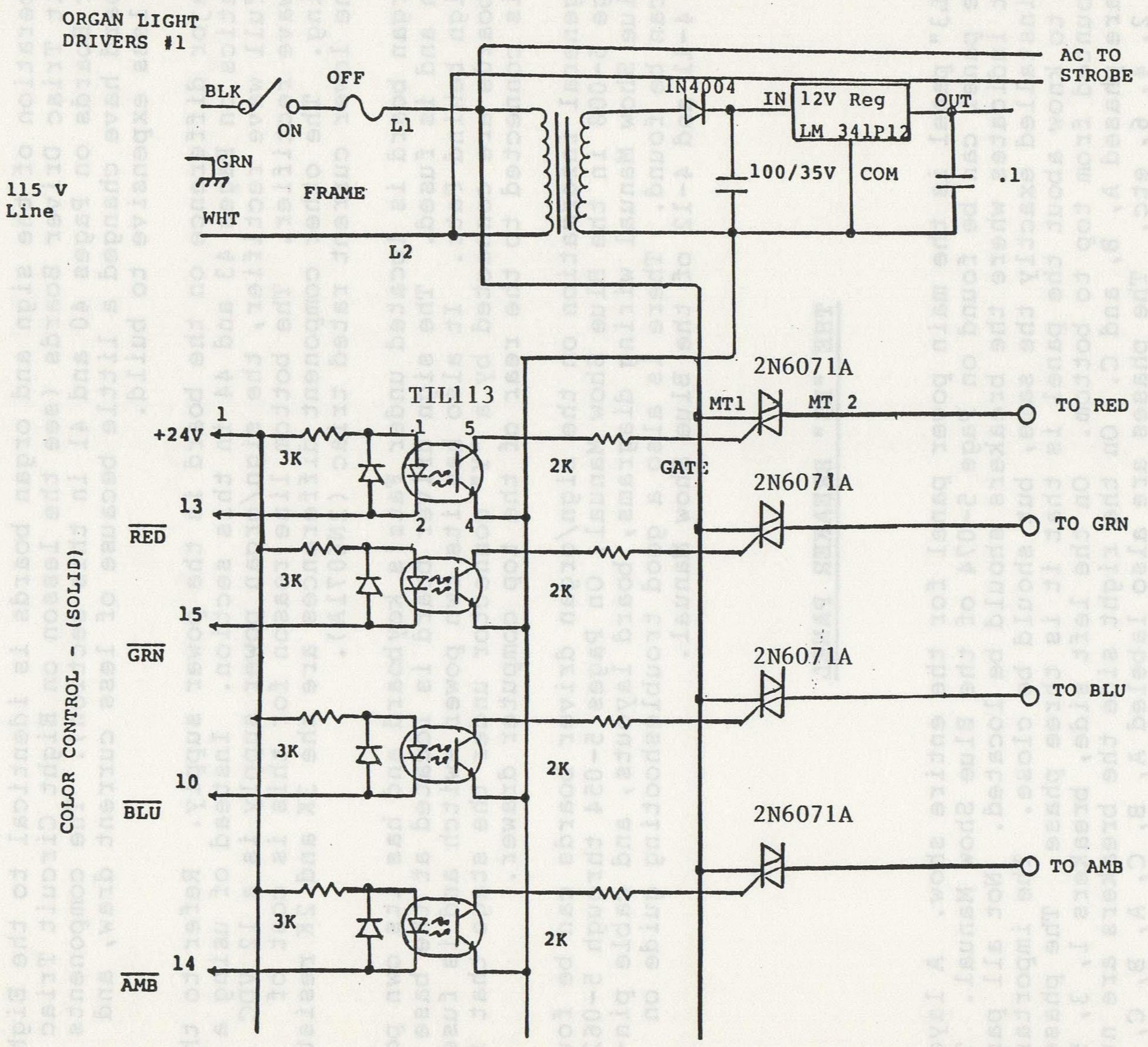
ORGAN LIGHT DRIVERS #1
115 V Line
BLK
ON
OFF
L1
GRN
FRAME
WHT
L2
1N4004
100/35V
IN
12V Reg
LM 341P12
OUT
COM
.1
AC TO STROBE
COLOR CONTROL - (SOLID)
1
+24V
13
RED
15
GRN
10
BLU
14
AMB
3K
3K
3K
3K
TIL113
1
5
2
4
2K
2K
2K
2K
GATE
MT1
MT 2
2N6071A
2N6071A
2N6071A
2N6071A
TO RED
TO GRN
TO BLU
TO AMB

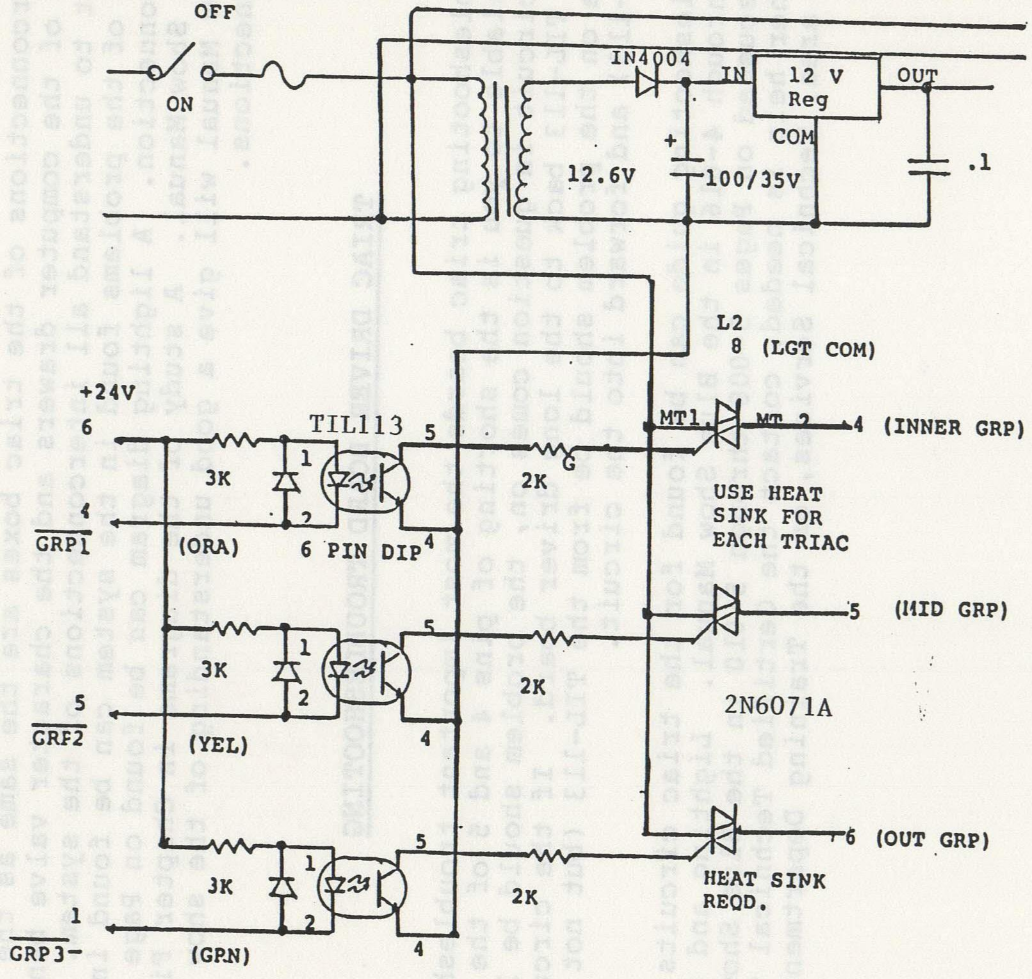
OFF
ON
IN4004
IN
12 V Reg
OUT
COM
+
100/35V
.1
12.6V
L2
8 (LGT COM)
+24V
6
3K
TIL113
1
2
5
4
6 PIN DIP
2K
G
MT1
MT 2
4 (INNER GRP)
USE HEAT SINK FOR EACH TRIAC
GRP1
(ORA)
5 (MID GRP)
GRP2
(YEL)
2N6071A
6 (OUT GRP)
HEAT SINK REQD.
GRP3
(GRN)

MOLEX RECEPTACLE WITH FEMALE PINS

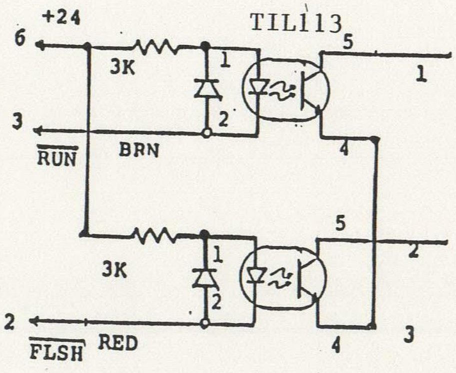
+24
6
3K
TIL113
1
2
5
4
3
RUN
BRN
2
FLSH
RED

SIGN DRIVERS

TRIAC INTERCONNECTIONS

The interconnections of the triac boxes are the same as the interconnections of the computer drawers and the character valve banks. It is important to understand all interconnections of the system. The majority of the problems found in the system can be found in a loose or bad connection. A lighting diagram can be found on Page 5-068 of the Blue Show Manual. A study of the diagrams in Chapter Five of the Blue Show Manual will give a good understanding of the show interconnections.

TRIAC DRIVER BOARD TROUBLESHOOTING

In troubleshooting triac boards the most important troubleshooting aid available to you is the shorting of pins 4 and 5 of the TIL-113. If the circuit in question comes on, the problem should be located from to TIL-113 back to the long driver board. If the circuit does not come on the problem should be from the TIL-113 (but not including the TIL-113) and forward into the circuit.

A troubleshooting guide can be found for the triac circuits on Pages 4-011 through 4-016 in the Blue Show Manual. Lighting and triacs are also discussed on Pages 5-008 through 5-010 in the Blue Show Manual. If further help is needed, contact the Certified Technical Trainer in your area, Technical Services, or the Training Department.

SHOWBIZ PIZZA TIME

ANIMATION PNEUMATICS

JOB OBJECTIVE:

Upon completion of training, the Technical Manager will be able to:

	TASKS	PREPARATION	COMPLETED
I.	State and identify the general components and operation of the pneumatic system.	Section 2 Pages 46-47	________
II.	State and demonstrate the flow of air from the intake filters of the compressor to the output of the air dryer.	Section 2 Pages 48-53	________
III.	State and demonstrate all maintenance procedures, including the unloaders and proper tank draining procedures. Perform a complete compressor pump test.	Section 2 Pages 54-58	________
IV.	State and demonstrate the operation and adjustment of the dual pressure regulator.	Blue Show Manual Pages 3-003/ 3-005	________
V.	State and demonstrate the operation and adjustment of the pneumatic oilers.	Section 2 Pages 59-62	________
VI.	State and demonstrate the operation of the 4-way Mac-valve.	Blue Show Manual Pages 3-003/ 3-004	________
VII.	State and demonstrate the operation flow control valve.	Section 2 Page 63	________
VIII.	State and demonstrate the operation and adjustment of the single acting cylinder.	Blue Show Manual Pages 3-004, 3-017/ 019, 3-025/3-029	________
IX.	State and demonstrate the operation and adjustment of the double acting cylinder.	Blue Show Manual Pages 3-004, 3-020/ 3-024	________
X.	State and demonstrate the operation and adjustment of the Tollmatic cylinder.	Section 2 Page 64	________

____________________	____________________
Regional Technical Trainer	Technical Manager
Date: ______________	Date: ______________

PNEUMATIC SYSTEM

The pneumatic system consists of the following components: compressor, filter/regulator, air dryer, condensation bowl, lubricators, valve banks, flow controls and cylinders. An explanation of these technical terms follows:

1. Compressor - Acts as a pump to pressurize the air and to send it to the show, Whac-A-Demon and balloon blow-up.
2. Regulator - Sets the air pressure to 100 pounds per square inch or whatever pressure may be required.
3. Air Dryer - Removes moisture from the pressurized air by cooling.
4. Condensation Bowl - Allows moisture to settle out of the pressurized air into a drain bowl.
5. Dual Pressure Regulator - Adjusts the electronimation to either 40 or 80 pounds of air pressure.
6. Lubricators - Devices containing oil that spray a mist of oil into the air lines to be carried to characters.
7. Valve Banks - 24 vac solenoid operated valves which allow or prevent the flow of air to the show cylinders.
8. Flow Controls - Adjustments on the air line which regulate the speed and volume of air that flows to the cylinders of each character.
9. Cylinders - Devices which are moved by the flow of air and cause the show characters to move. These are of single and double action types.

The block diagram below shows the interconnection of the components of the pneumatic system.

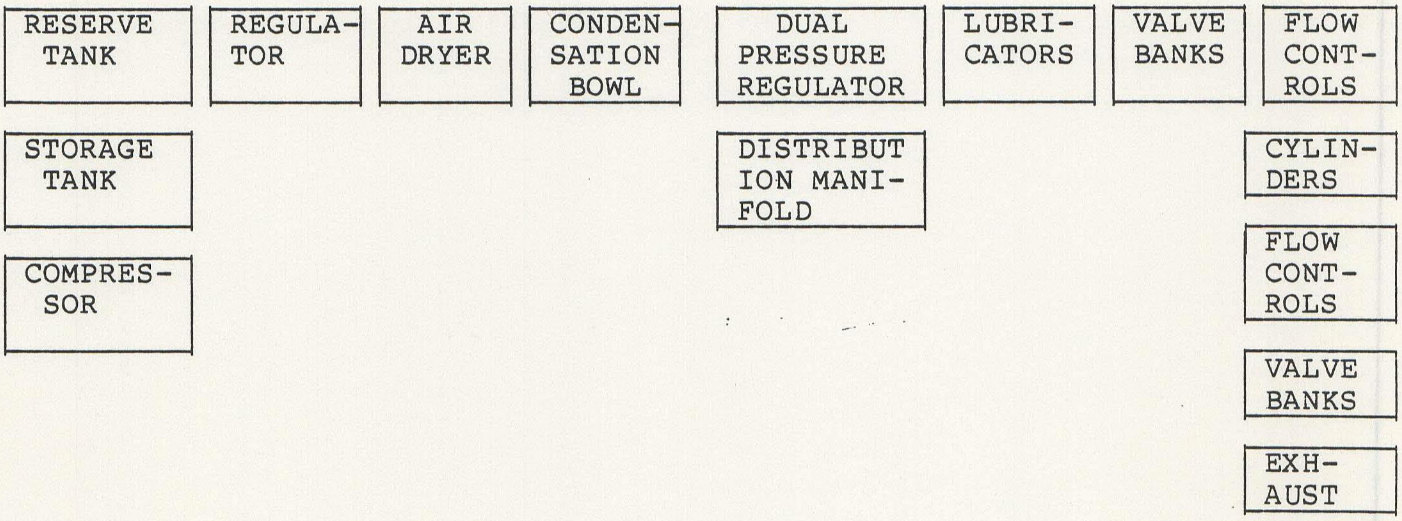
RESERVE TANK
REGULATOR
AIR DRYER
CONDENSATION BOWL
DUAL PRESSURE REGULATOR
LUBRICATORS
VALVE BANKS
FLOW CONTROLS
STORAGE TANK
DISTRIBUTION MANIFOLD
CYLINDERS
COMPRESSOR
FLOW CONTROLS
VALVE BANKS
EXHAUST

Pneumatic System (Contd.)

OPERATION

The compressor pressurizes the air and sends it to the regulator where it is regulated to 100 pounds per square inch. The air dryer removes moisture from the air. Any remaining moisture collects in the condensation bowl. The air then goes to the dual pressure regulator and then to the lubricators where it picks up a mist of oil. The air proceeds through the valve banks and flow controls to the cylinders. The air causes the cylinders to move, and it also lubricates the cylinders with the oil mist.

NOTE: For a further description of the Pneumatic opertion, refer to Pages 3-002 to 3-004 in the Blue Show Manual.

THE FLOW OF AIR

The following description of air flow is based on an ambient air temperature of 90 degrees farenheit. The pressures given are accurate although the temperatures may vary a little. It is important to know temperatures, only to understand the operation of the compressor. The diagnosis can be found on Pages 49-53 of this section.

The air enters the compressor through the two air intake filters (A of Fig. 1 and A of Fig. 2) of the low pressure heads (B of Fig. 1). The air is pumped to 40 pounds of pressure and reaches a temperature of about 315 degrees. From the low pressure heads it flows into the exhaust manifold (C of Fig. 1 and A of Fig. 3), through the intercoolers (D of Fig. 1 and B of Fig. 3) and into the intake manifold (C of Fig. 3) of the high pressure head (E of Fig. 1).

The air enters the high pressure head at about 140 degrees and is pumped to 175 pounds of pressure, or whatever the high pressure cutout is set at. The temperature of the air as it enters the exhaust manifold (A of Fig. 4) is about 380 degrees. The air then enters the after coolers (A of Fig. 5) and is cooled to about 131 degrees as it enters the main tank (B of Fig. 4) where it is cooled to about 107 degrees.

In most systems there is a reserve tank (A of Fig. 5). The air is cooled to about 96 degrees. The air will enter the air dryer (B of Fig. 5) at 96 degrees, and leave the dryer at 91 degrees, or as close to the ambient air temperature as possible.

The heating and cooling of this air is a natural process of compression. This heating and cooling creates moisture, or extracts the moisture from the air. The moisture is collected in the main tank and is to be drained slowly every day.

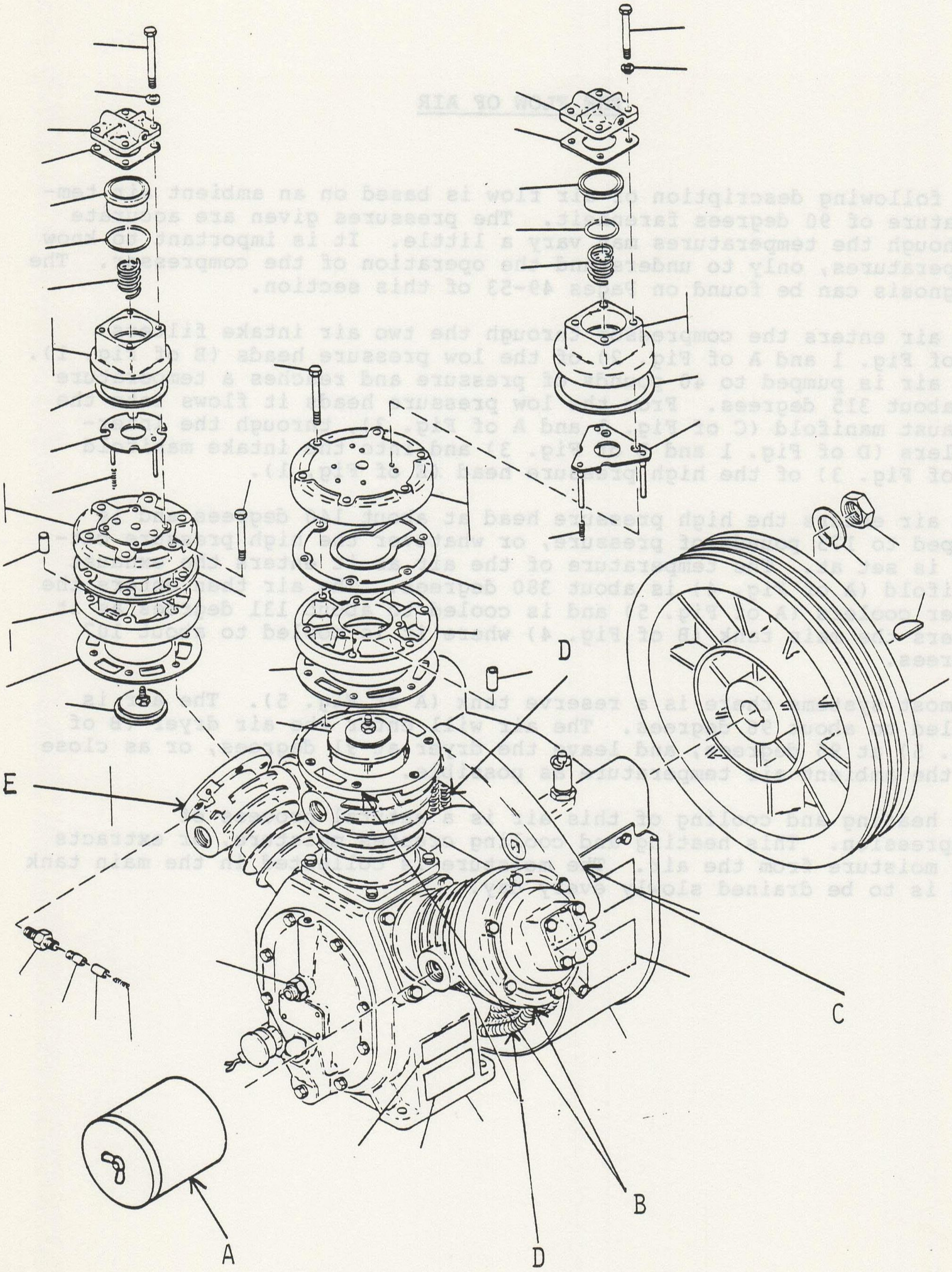

FIGURE 1.

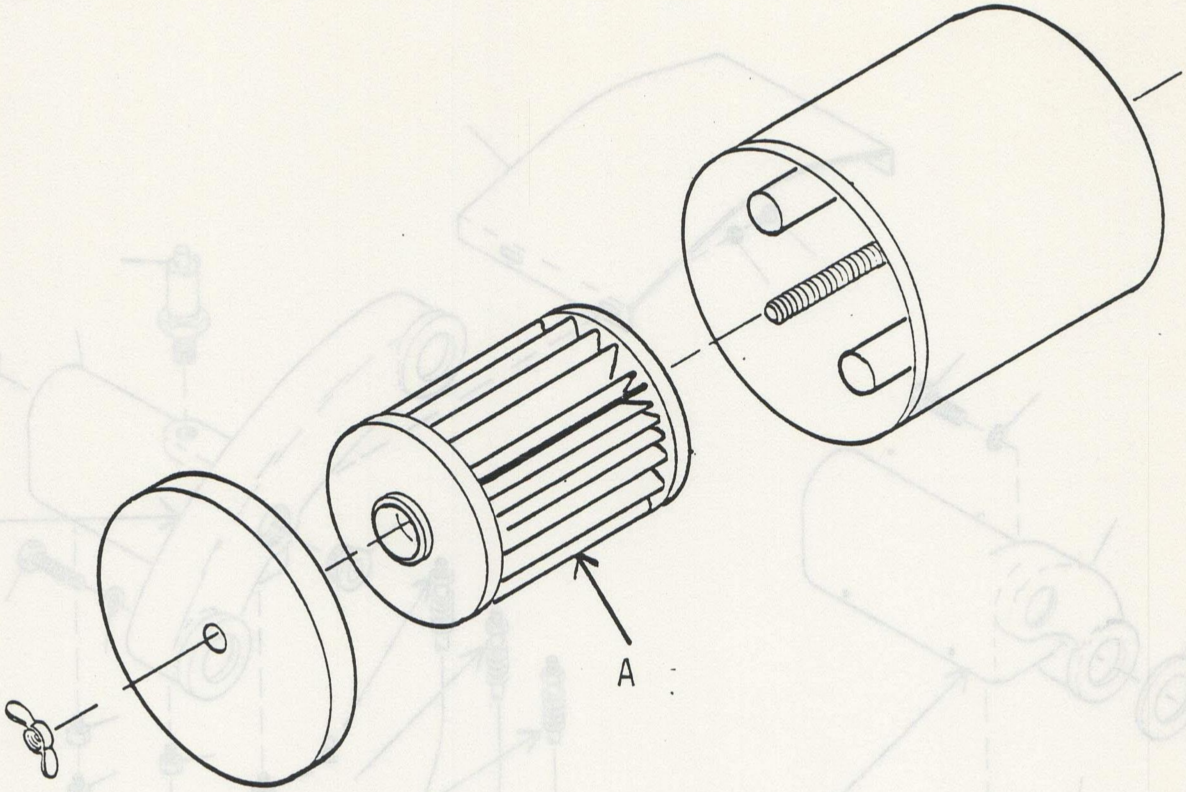

FIGURE 2

REF NBR	PART NUMBER	DESCRIPTION	CCN NUMBER	QTY PER UNIT	REC SPARES		
					1	2	3
	H36330T7	FILTER COMPLETE-INLET	37161569	2			
9-1	W114080	ELEMENT	37046455	2	2	2	2
		NOTE-FOR HEAVY DUTY AIR FILTERING REQUIREMENTS, ORDER HEAVY DUTY FILTERING ELEMENT W114080T.					

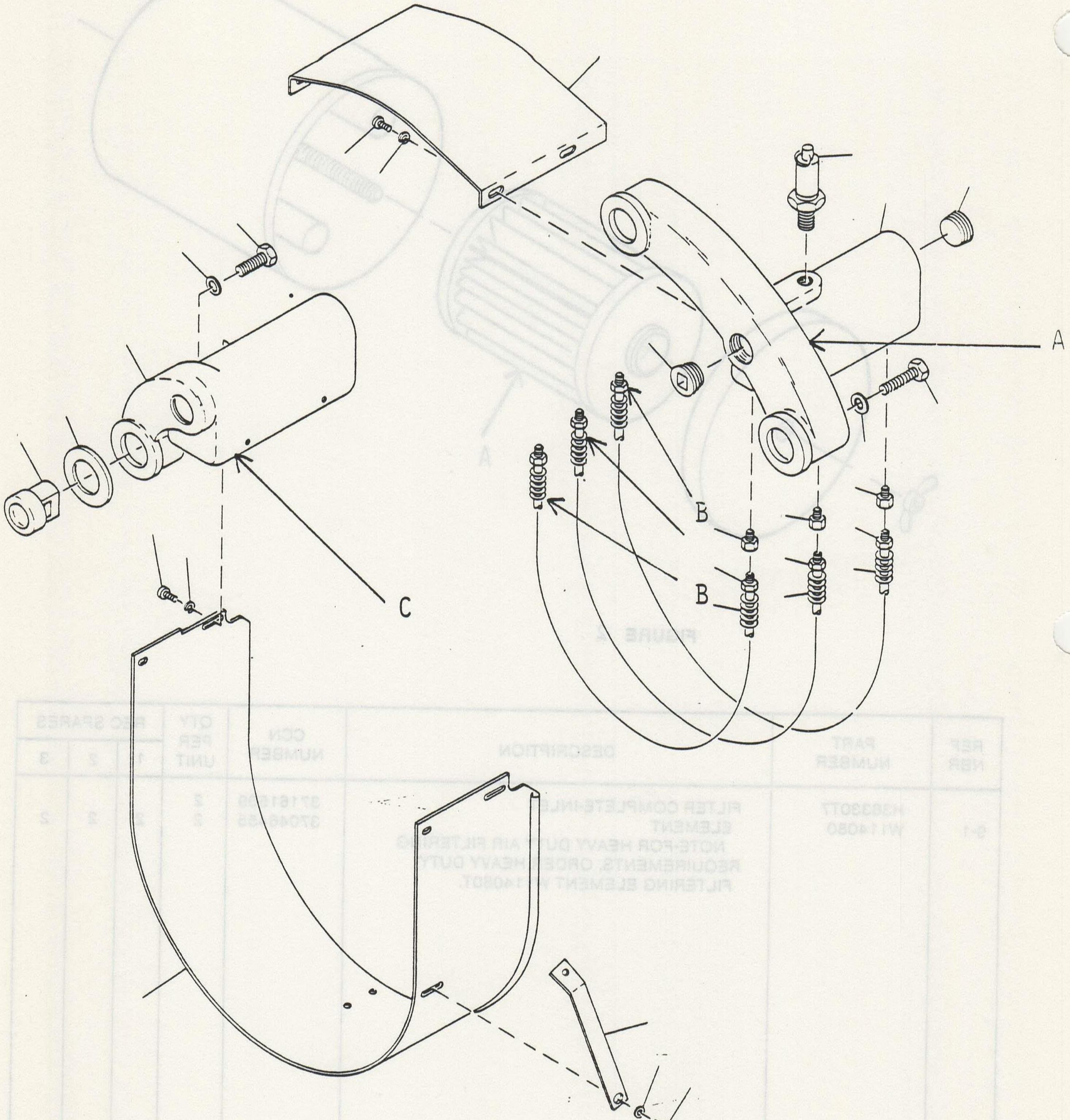

FIGURE 3

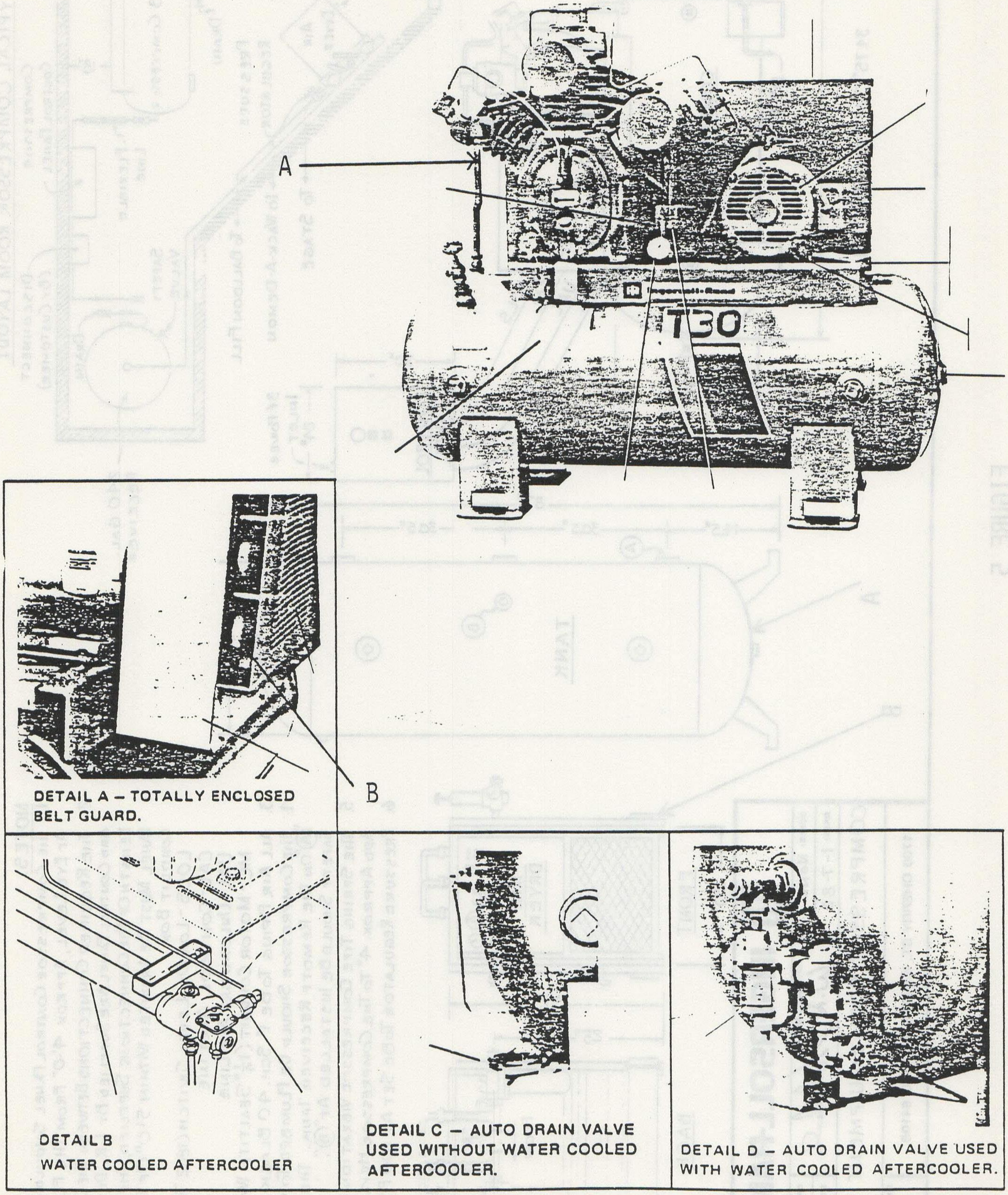

DETAIL A – TOTALLY ENCLOSED BELT GUARD.

DETAIL B
WATER COOLED AFTERCOOLER

DETAIL C – AUTO DRAIN VALVE USED WITHOUT WATER COOLED AFTERCOOLER.

DETAIL D – AUTO DRAIN VALVE USED WITH WATER COOLED AFTERCOOLER.

FIGURE 4

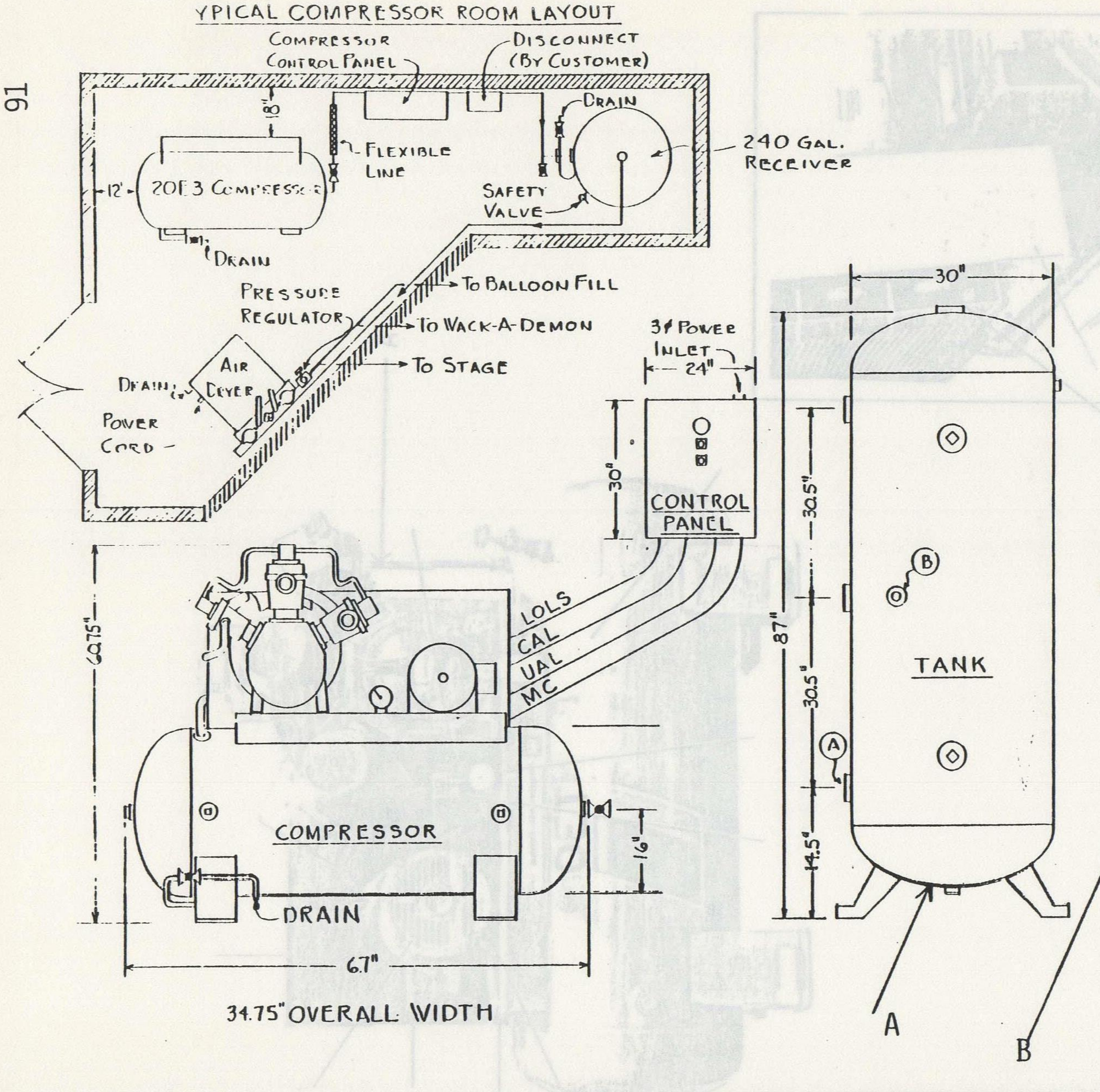
YPICAL COMPRESSOR ROOM LAYOUT
Compressor Control Panel
Disconnect (By Customer)
18"
Drain
Flexible Line
240 Gal. Receiver
12'
20E3 Compressor
Safety Valve
Drain
Pressure Regulator
To Balloon Fill
To Wack-A-Demon
To Stage
Air Dryer
Drain
Power Cord
3ɸ Power Inlet
24"
30"
CONTROL PANEL
30"
LOLS
CAL
UAL
MC
60.75"
COMPRESSOR
16"
DRAIN
67"
34.75" OVERALL WIDTH
30"
87"
30.5"
30.5"
14.5"
B
A
TANK
A
B

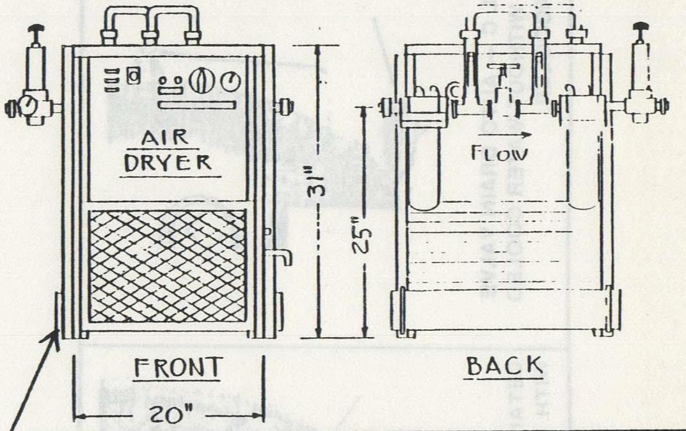
AIR DRYER
31"
25"
Flow
FRONT
BACK
20"

NOTES:

1. The Compressor Control Panel Should Be Mounted At Eye Level, Approx. 4'-0" From The Floor.
2. The Required Connections Between The Compressor And Control Panel Are Supplied By I-R. Due To The Length Of The Connections Supplied, The Control Panel Must Be Mounted Within 5'-0" Of The Motor Conduit Box.
   - LOLS - Low Oil Level Switch (18-2 Type SO Cord)
   - CAL - Control Air Line
   - UAL - Unloading Air Line
   - MC - Motor Conduit ($1\frac{1}{4}$" Sealtite W/Ground).
3. All Air Piping To Be 1" Sch. 40 Black Iron.
4. The Compressor Should Be Plumbed To Connection "Ⓐ" On The Remote Receiver Tank. The Tank Safety Should Be Installed At "Ⓑ".
5. The Spring Type Compressor Vibration Mounts Add Approx. 4" To The Compressor Height.
6. Pressure Regulator To Be Set At 100 PSIG.

INGERSOLL-RAND®

SCALE: NONE
DATE: 1-7-82
APPROVED BY: W. D.
DRAWN BY Dm
REVISED

COMPRESSOR ROOM EQUIPMENT [illegible]

1700 CHERRY ST., KANSAS CITY, MO 64108
DRAWING NUMBER 1782

FIGURE 5

COMPRESSOR SYSTEM MAINTENANCE

WARNING: Disconnect power
supply prior to
servicing

DAILY

° Drain condensation from the following:

Main storage tank (E of Figure 5).
Reserve storage tank (F of Figure 5).
Dryer condensate blow down valve (G of Figure 5).
Drain condensate bowl under the stage (A of Figure 6).
Check oilers for proper oil levels
(proper level is 3/4 full)

° Check for air leaks

NOTE: Drain compressor tank slowly

WEEKLY

° Check compressor crankcase oil level
° Clean compressor and motor of any accumulated oil or dirt
° Clean the following heat exchangers with the service air hose:

Compressor intercooler (finned tubing between cylinders)
Compressor aftercooler (finned tubing in belt guard)
Dryer condenser (located at rear of dryer)

° Check all regulators, including the dual pressure regulator, for proper operation

° Check outside air ventalation system and filter.

Procedure:

Bi-monthly, perform a compressor pump up test.

1) Push the "off" button on the compressor control panel.
2) Using the condensate drain valves, bleed all pressure from the system to 0 PSIG.
3) Close the air valve on the inlet side of the dryer (K of Figure 5), isolating the compressor receiver and remote receiver from the system.
4) Close the condensate drain valves.
5) Push the "on" button on the compressor control panel.
6) Record in minutes and seconds the time from pushing the "on" button until the compressor receiver pressure gauge reads 175 PSIG.

This test is performed to establish a record of the compressor efficiency by which the condition of the compressor can be determined at periodic intervals.

Compressor System Maintenance (Cont.)

EVERY 3 MONTHS

° Change compressor oil

5 qts. of 40 wt. non-detergent oil required (Do not use detergent or multiviscosity oils) winter operation requires 30 wt. oil.

° Check operation of low oil level switch

Procedure:

1) Attach a continuity tester to terminals 7 and 8 in the compressor control panel.
2) While oil is draining from the compressor, continuity should be broken as the oil level falls: indicating that the switch is operational.
3) After filling the compressor with oil to the proper level, continuity should be re-established.
4) If switch appears to be out of adjustment, refer to instruction book for setting procedure or call Technical Services.

° Check the following bolts and tighten if required:

(4) Compressor to baseplate
(4) Motor to baseplate
(12) Compressor cylinders to crankcase
(12) Compressor unloaders to heads
(18) Compressor heads to cylinders
All beltguard to compressor and baseplate

° Check the following in the compressor control panel:

1) Assure that all relays and timers fit snug in their sockets.
2) Adjust (if required) the following components to the proper setting:

T-1	8 Sec
T-2	4 Sec
PS-1	Compressor start - 100 PSIG Compressor stop - 180 PSIG
PS-2	Compressor load - not used Compressor unload- not used

3) Remove, check and clean the 3 unloader assemblies. (I of Figure 5)

Compressor System Maint. (Cont)

° Check the following in the compressor control panel:

1) Assure that all relays and timers fit snug in their sockets.
2) Adjust, if required, the following components to the proper setting:

T-1 8 Sec
System Model 81381 DH

T-2 4 Sec
TD-1 5 Sec System Model 93082 DH
PS-1 Compressor start - 100 PSIG
Compressor stop - 180 PSIG
PS-2 Compressor load - not used
Compressor unload - not used

FILTERS

° The two compressor inlet air filter elements should be changed approximately every 1,000 hours. The change should be done during the closest 3 month service interval and recorded with an asterisk. (Cleaning of filters using the compressed air will extend the filters life.)

° If there is still a Delteck filter (H of Figure 5) connected to the outlet end of the compressor storage tank, remove the filter but leave the glass container. If it develops a leak, remove the glass container and install straight pipe plumbing.

SERVICE RECORD

° The following data should be recorded after each 3 month maintenance period as in the spaces provided below.

Example:	Date of Service	9-7-82
	Technicians Initials	W.D.S.
	Hourmeter Reading	948.2*
	Pump-Up Time Min:Sec	8:24

*Indicates that compressor inlet air filter elements were changed.

Compressed Air System - Compressed air entering dryer goes first to the precooler/reheater where it is cooled by the cool air leaving the separator. The air then goes into the evaporator where it is further cooled to the desired dewpoint by the freon in the refrigeration circuit. The air continues to the separator where the condensed moisture is separated from the air by centrifugal force and the condensate goes out the drain while dry compressed air goes to the precooler/reheater where it is reheated by the incoming hot moist air. The air then goes back into the compressed air system.

Compressor System Maint. (Cont)

Cooling in the refrigeration circuit is accomplished by the continuous circulation and evaporation of a fixed supply of refrigerant, either R12 or R22. The hermetically sealed compressor delivers the gas through the discharge tube under pressure to the condenser. Here the combined action of the fan and the finned tubes releases the heat to the air. When the gas loses heat it reverts to a liquid.

The flow of liquid refrigerant into the evaporator is controlled by the capillary tube. As the refrigerant enters the evaporator it is subject to much lower pressure due to the suction of the compressor. Therefore it will boil and evaporate picking up heat from the compressed air and lowering its temperature.

The refrigerant also lowers the temperature of the heat sink material surrounding the air tubes. When a preset temperature is achieved the thermostat cycles the refrigeration off. The compressed air continues to be chilled by the heat sink material until it rises to a preset temperature and the thermostat again cycles the refrigeration on.

ROUTINE INSPECTION AND MAINTENANCE - The Zeks-Therm refrigerated air dryer requires little maintenance. Fan motor bearings are prepacked and sealed. However, it is recommended to inspect and service your dryer at regular intervals to obtain maximum benefit out of your dryer. (Quarterly inspections by ShowBiz Pizza Time personal and yearly inspection by a qualified service representative.)

Lubrication - These dryers utilize hermetically sealed condensing units and do not require any lubrication.

1. Inspect Refrigerant Condenser - For proper operation, it is essential that the condenser fins are free of dirt and dust. Regular cleaning is therefore required. If the dryer is located in an area where dust is excessive, a condenser ambient air filter should be fitted.

2. Blow Down and Test Condensate Drainage System - Open test valve occasionally to test operation of the automatic drain trap. Should water blow through the test valve, the automatic trap is inoperative and should be inspected and cleaned. To service trap, isolate it from the system by closing valve. Re-check the operation of the drain trap with the test valve after several days of operation.

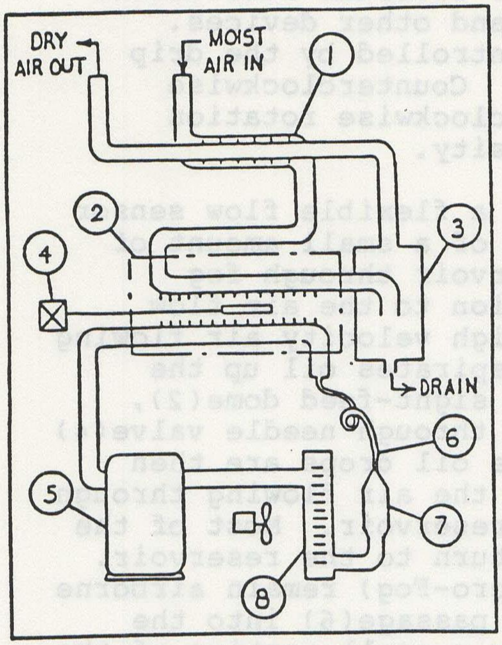
DRY AIR OUT
MOIST AIR IN
1
2
3
4
DRAIN
6
5
7
8

(1) PRECOOLER/REHEATER
(2) AIR CHILLER EVAPORATOR
(3) SEPARATOR
(4) THERMOSTAT
(5) COMPRESSOR
(6) CAPILLARY TUBE
(7) FILTER/DEHYDRATOR
(8) CONDENSER (AIR OR WATER COOLED)

FIGURE 2 SCHEMATIC

MINIATURE MICRO-FOG LUBRICATOR
For Compressed Air Service

OPERATION

The Micro-Fog lubricator is a device for injecting a finely divided "fog" of oil into a flowing stream of compressed air to automatically provide the proper internal lubrication for air operated tools and other devices. Micro-fog density is controlled by the drip rate adjusting knob(1). Counterclockwise rotation increases and clockwise rotation decreases Micro-Fog density.

TYPE L07
(Micro-Fog)

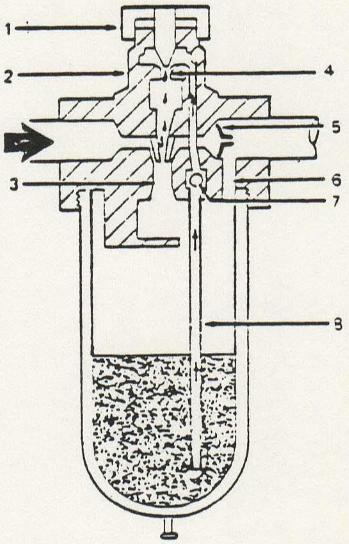

The lubricator utilizes a flexible flow sensor (5) to control the flow of a small amount of inlet air into the reservoir through fog generator(3) in proportion to the air flow past the sensor. The high velocity air flowing through the generator aspirates oil up the siphon tube(8) into the sight-feed dome(2), where it drips downward through needle valve(4) into the generator. The oil drops are then atomized and mixed with the air flowing through the generator into the reservoir. Most of the larger oil particles return to the reservoir. The finer particles (Micro-Fog) remain airborne and are carried through passage(6) into the downstream system. Only a small portion of the drops visible in the sight-feed dome are delivered downstream to the device being lubricated. The proportionate control afforded by the flow sensor provides a nearly constant oil-to-air density ratio over a wide range of air flows. Check ball (7) keeps the siphon tube full during periods of no flow.

SPECIFICATIONS

Port Threads: 1/8" or 1/4" PTF

Oil Reservoirs -
Standard: Transparent Polycarbonate; 1/2 oz. (.015ℓ) oil capacity

Optional: Metal; 1/2 oz. (.015ℓ) oil capacity

Maximum Rated Operating Conditions -
Polycarbonate Reservoir: 150 PSIG (10.3 bar); 125°F (52°C)
Metal Reservoir: 250 PSIG (17.2 bar); 175°F (79°C)

Recommended Operating Flow Range: .5 to 10 scfm (.25 to 4.7 dm 3/s) at 90 PSIG (6.2 bar)

Recommended Lubricants: This lubricator will perform satisfactorily using misting type oils rated 50 to 200 SSU at 100°F (38°C). The oils used must be compatible with materials of construction. Contact your lubricant supplier and the builder of the equipment to be lubricated to obtain specific lubricant recommendations.

Miniature Micro-Fog Lubricator (Cont)

MATERIALS OF CONSTRUCTION

Body	Zinc
Reservoir	
Transparent	Polycarbonate
Metal	Aluminum
Sight Feed Dome	Trogamid-T
Elastomers	Neoprene and Buna-N

INSTALLATION

1. Air line piping should be same size a lubricator parts.
2. Install lubricator vertically (adjustment knob up) in air line downstream of filter and regulator as near as possible to the device being served..
3. Connect piping to proper parts using pipe thread sealant on male threads only. Do not allow sealant to enter interior of lubricator. Air flow must be in direction of arrow on top of body.
4. Fill reservoir with a good quality lubricant (see Specifications) to level indicated by maximum fill line. DO NOT OVERFILL.

GRAPHIC SYMBOLS

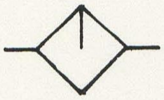

No Drain

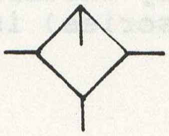

Manual Drain

WARNING

These units are intended for use in industrial compressed air systems only. They must not be used where pressure or temperature may exceed maximum rated operating conditions. See specifications.

The poly carbonate plastic bowls used on these units can be damaged and possibly burst if exposed to such substances as certain solvents, strong alkalies, compressor oils containing ester-based additives, or synthetic oils. Fumes of these substances in contact with the polycarbonate bowl, externally or internally, can also result in damage. Clean with warm water only.

Use metal bowl in applications where a plastic bowl might be exposed to substances that are incompatible with polycarbonate.

Before using with fluids other than air, for non-industrial applications, or for life support systems, consult C.A. Norgren Co.

Miniature Micro-Fog Lubricator (Contd)

ADJUSTMENT

1. Turn lubricator drip rate knob fully clockwise, then turn on system air pressure.
2. Adjust lubricator drip rate only when there is a constant rate of air flow thru the lubricator. Monitor drip rate thru sight feed dome.
3. Determine the average rate of air flow (scfm) thru the lubricator then turn the adjusting knob to obtain the recommended drip rate (Drops/Min). See Fig. 1. Turn adjusting knob counterclockwise to increase and clockwise to decrease the drip rate. Push lockring on adjusting knob downward to lock drip rate setting. To release, pull lockring upward.
4. Monitor the device being lubricated for a few days following initial adjustment. Readjust the drip rate if the oil delivery at the device appears either excessive or low.
5. Drip rate setting can be made tamper resistant by installing a seal wire (see Accessories) in groove above lockring.

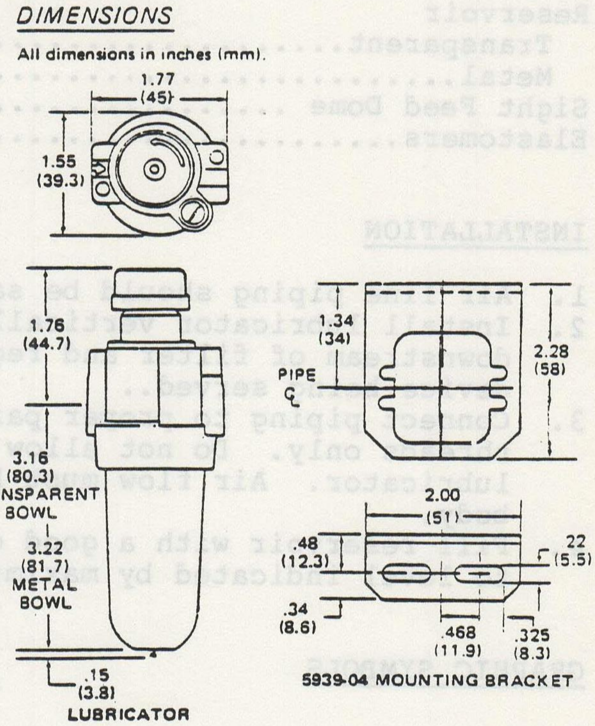
DIMENSIONS
All dimensions in inches (mm).
1.77 (45)
1.55 (39.3)
1.76 (44.7)
3.16 (80.3) TRANSPARENT BOWL
3.22 (81.7) METAL BOWL
.15 (3.8)
LUBRICATOR
1.34 (34)
PIPE ℄
2.28 (58)
2.00 (51)
.48 (12.3)
22 (5.5)
.34 (8.6)
.468 (11.9)
.325 (8.3)
5939-04 MOUNTING BRACKET

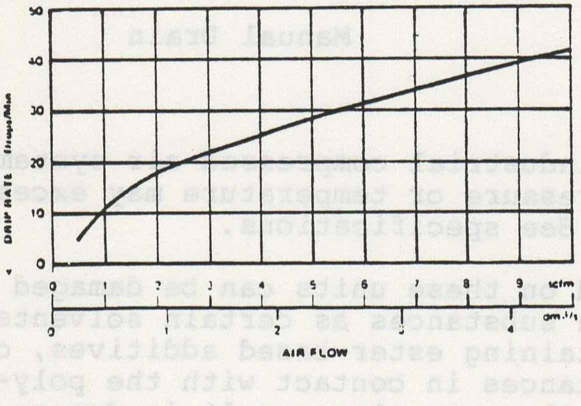

Fig. 1. Recommended Drip Rate Settings for Average Lubrication

Miniature Micro-Fog Lubricator (Cont)

DISASSEMBLY

1. Shut off inlet pressure and reduce pressure in the inlet and outlet lines to zero. Loosen fill plug(1). Lubricator can be disassembled without removal from air line.
2. Use a 1 inch deep socket to remove the sight feed dome(3), then remove seal(4), oil fill plug(1), O-ring(2), reservoir(7), gasket(8), and baffle (6). Do not attempt to remove siphon tube(10) from body(5), as these parts are permanently assembled.

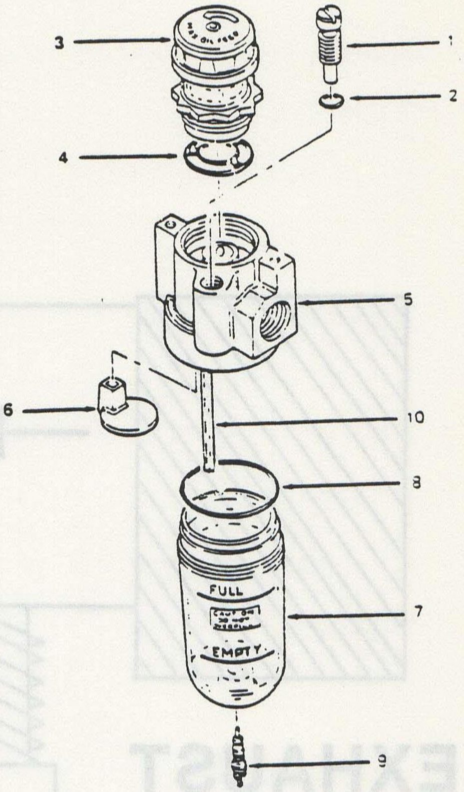

CLEANING

1. Clean transparent reservoir(7) using warm water. Clean other parts using soap and water. Dry parts and blow out internal passages in body(5) using clean, dry compressed air.
2. Inspect all parts carefully.
3. Replace damaged parts.

REASSEMBLY

1. Prior to reassembly apply a generous coat of Dow Corning 44 grease (or equivalent) to seal(4) and O-rings (2,8). Apply a small amount of Dow Corning Molykote G grease (or equivalent) to full length of threads on metal reservoirs.
2. Torque sight-feed dome(3) to 30-35 inch pounds. Torque reservoir(7) to 5 to 10 inch pounds.

REPAIR KITS

Seal Kit (items 2, 4, 8)	3795-03

REPAIR PARTS

Metal reservoir (w/drain, items 7 and 9)	3809-52
Polycarbonate reservoir (without drain, item 7)	3635-64
Polycarbonate reservoir (with drain, items 7 and 9)	3635-63
Sight-feed dome (item 3)	5055-54

ACCESSORIES

Mounting bracket and screws	5939-04
Tamper resistant seal wire	2117-01

SEE PAGES 3-003, STEP G, AND 3-006, STEP G, IN THE BLUE SHOW MANUAL

FLOW CONTROL

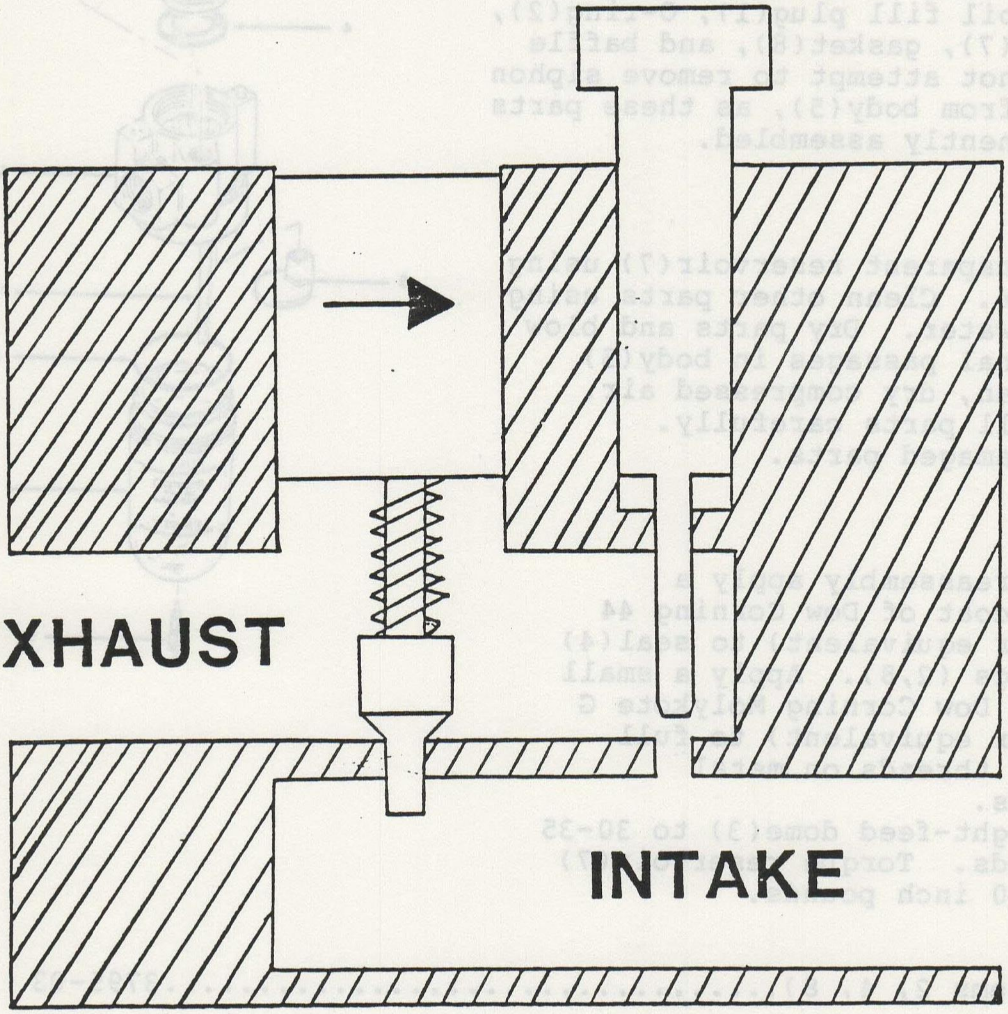
EXHAUST
INTAKE

NOTE: SEE PAGE 3-004, STEP J, IN THE BLUE SHOW MANUAL

THE TOLLMATIC CYLINDER

The Tollmatic Cylinder operates as a double acting cylinder, described on Pages 3-004, 3-017 - 3-019 in the Blue Show Manual, with the exception of a cable attached to the end of the piston which is drawn through the cylinder. The Tollmatic is used for the Sun, Moon, Spider, and Looney Bird mechanisms. A description of repair and a diagram of the cylinder can be found on Pages 3-012, Step K, and 3-030 of the Blue Show Manual.

ANIMATION MECHANICS

JOB OBJECTIVE:

Upon completion of training, the Technical Manager will be able to:

	TASKS	PREPARATION	COMPLETED
I.	State and demonstrate the types of hinges, the repair and assembly of the hinges.	Blue Show Manual Pages 3-032/ 3-041	________
II.	State and demonstrate the mechanics of the head assembly.	Blue Show Manual Page 3-042/3-047	________
III.	State and demonstrate the mechanics of the chest assembly; to include the head tilt, head up/down, and guitar movements.	Blue Show Manual Pages 3-048/3-058	________
IV.	State and demonstrate the mechanics of the arms and shoulders; to include the arm raise movements.	Blue Show Manual Pages 3-059/3-068	________
V.	State and demonstrate the mechanics of the legs and pelvis; to include the body lean and body turn movements.	Blue Show Manual Pages 3-069/3-074	________
VI.	State and demonstrate the mechanics of the props; to include Looney Bird, Sun, Moon, Spider, Baby Bear, and Dooks bass drum and high hat.	Blue Show Manual Pages 3-075/3-093	________
VII.	State and demonstrate the use of a protractor in the setting of character angles.	Section 2 Page 65	________
VIII.	State and demonstrate the use of a shake test to determine broken or worn parts.	Section 2 Page 65	________

____
Regional Technical Trainer

Date: ________________

____
Technical Manager

Date: ________________

THE PROTRACTOR

Most any type of protractor can be used to set the angles on the character movements. However, it is recommended that the Craftsman Precision Protractor (Part No. 9-4029) be used. It may be purchased at any Sears Tool Department. This is the protractor used by Creative Engineering to set the original angles. The setting of angles is covered on Pages 3-094 through 3-135 in the Blue Show Manual.

The critical adjustment charts on Pages 3-095 to 3-101 in the Blue Show Manual list all the data necessary to set the angle. The last column on the charts (drawing page #) indicates the drawing of that particular angle and how it should be measured.

SHAKE TEST

The use of the Shake Test should be employed the very first thing every morning, every day of the week. With air applied to each character, shake every movement of the character. This action will indicate any noisey or worn mechanical or pneumatic parts. The main purpose of the Shake Test is to find any broken parts. Remember that the show is the technical manager's number one responsibility. It is better to find that broken part on a character before maintenance begins on another character.

ANIMATION
COSMETICS

ANIMATION COSMETICS

JOB OBJECTIVE:

Upon completion of training, the Technical Trainer will be able to:

TASKS	PREPARATION	COMPLETED
I. State and demonstrate the care in removal, cleaning, maintenance and repair of character latex and foam parts.	Blue Show Manual Pages 3-137/ 3-138	________
II. State and demonstrate the care in removal, cleaning, grooming, maintenance and repair of the character costumes and fur.	Blue Show Manual Pages 3-139/3-140	________
III. State and demonstrate the care in removal, cleaning, maintenance and repair of the character inner body parts.	Blue Show Manual Pages 3-141/3-142	________
IV. State and demonstrate the repair and replacement of snaps and velcro on the character's latex, fur, fiberglass, leather and costumes.	Blue Show Manual Pages 3-143/3-144	________
V. State and demonstrate the cleaning, maintenance, and lubrication of the eye balls and eye lids.	Section 2 Page 66	________
VI. State and demonstrate the operation, cleaning and repair of the stage lights and spotlights. Also state the adjustment of the character spotlights.	Section 2 Pages 66-67	________
VII. State and demonstrate the operation, cleaning, adjustment, maintenance, and repair of the drapes, track and drive system.	Section 2 Pages 67-71	________

ANIMATION COSMETICS Cont.

	TASKS	PREPARATION	COMPLETED
VIII.	State and demonstrate the maintenance and cleaning of the cosmetic props, carpets and the grass mats or stage surface.	Show Manual 3-148	________
IX.	State and demonstrate the cleaning and maintenance procedures for the character's clothing.	Show Manual 3-149/3-154	________
X.	State and demonstrate the operation, purpose, and adjustment of the show "VCR".	Section 2 Page 72	________

____
Regional Technical Trainer

Date: ______________________

____
Technical Manager

Date: ______________________

ANIMATION COSMETICS

EYE BALLS AND EYE LIDS

The most important maintenance of the eye assemblies is the lubrication. There are two types of lubricants used on the characters. The "C.E.I." lubricant (Part No. 95-015-075) is dark gray in color and comes in a silver, pint can. It is used to lubricate all moving mechanical and pneumatic parts, but it is not safe to use on parts that come in contact with the latex. The "eye" lubricant (Part No. APK-1301) is white in color and is used in the eye areas and is safe to use around the latex. For more information about the eye balls and eye lids read Page 3-145 in the Blue Show Manual.

STAGELIGHTS AND SPOTLIGHTS

It has been a constant problem in our entertainment center to keep the main character spotlights adjusted. The aperature size will either open or close due to the viberations and constant heating and cooling of the spotlight. In other instances, the aperature fins have become warped or burnt from excessive heat which causes a distorted spot.

This is caused by the lamp being too close to the iris. The "fix" of course is to move the lamp further away. Creative Engineering shipped the spotlights with the lamp socket fully "in". Prior to installing the bulb, reposition the socket "out" as follows: on the extreme rear of the spotlight are four screws (see the diagram on Page 3-187 of the Blue Show Manual). Three are located around the edge and one is in the center. The center one is the "tensioner" or lock. It normally has two lock nuts. Loosen the lock nuts and back this screw out 1/2 to 3/4 inch. Then "tighten" the other three screws equal amounts. This will pull the socket plate toward the rear. (Recommended are 2 - 3 turns in sequence - this will keep the plate relatively even). When the plate contacts the "tensioner", tighten it and lock it in place with the lock nuts. After inserting the bulb and reinstalling the socket assembly, drop the front barrel of the light and verify the bulb is centered in the hole. If not, you will have to readjust the plate positioning screws to get it centered.

If the iris is burnt beyond repair, a new iris would be the best solution. A temporary, and in some cases a permanent, fix is to replace the iris with a 4 by 4 inch junction box cover which should cost approximately 29¢. The cover will fit into the spotlight and mount with the existing two screws which will hold the aperature sizer in place. The tech will need to drill a hole in the center of the junction box cover before mounting it into the spotlight. Its been found that a 1/4 inch hole will produce the right size spot for most of the characters (Billy Bob's may need to be larger). After drilling the hole, clean it with a round file and mount the cover in the spotlight. After the spotlight has been reassembled, adjust the aperature sizer to its fullest open position. (Spotlight focus may be needed.) Adjust the shutters according to the diagram on Page 1-018 in the Blue Show Manual.

If you are having dim spotlights or "halo" effects reverse the forward focal lens. The focus assembly (the very front part of the light) contains two (2) lenses. Both are flat on one side and convex on the other. As shipped, the convex sides should be facing one another. Remove the spring clip and reverse the front lens. This will place the convex side of both lenses toward the stage. We experimented with this at Creative and found this configuration gave not only a sharper outline with no "halo", but a brighter light as well.

For more information on Show Lighting see Page 3-146 of the Blue Show Manual.

CURTAIN MOTORS

There are three types of curtain motors used in the system. The nine wire Bodine which has the capability of being wired for 220 VAC or 110 VAC. The four wire Bodine system which is a 110 VAC or the most recent system used is the 110 VAC Dayton. Because of the failure rate of both Bodine systems, on Pages 67 - 71 in this section, you will find instructions for converting to a Dayton system. If this becomes necessary contact Technical Services before proceeding. Technical Servcices can also give indepth troubleshooting aid concerning curtain motors. A data sheet for the Dayton system is located at the bottom of this page.

On Page 5-078 of the Blue Show Manual there is a schematic for the use of the nine wire Bodine system and the Dayton system. For your convenience a schematic of the four wire Bodine system has been included on Page 71 of this section.

A description of the drapes, tracks and drive system can be found on Page 3-147 in the Blue Show Manual. A good troubleshooting guide can be found on Pages 4-017 to 4-018 in the Blue Show Manual. A good repair section is located on Pages 5-010 to 5-011.

DATA FOR DAYTON MOTORS

Model - 5K339R/1/3 HP

RPM - 1725

Mfg. Ref. No. - R61190R

All parts are available at W. W. Graingers.

DATA FOR GEAR BOX

Model - 22151C

Input HP - 1/2

Output Torque - 498 in. pounds

Ratio - 50:1

Input Speed - 1725 RPM

Output Speed - 35 RPM

Mfg. Ref. No. - 200370CL814

CHANGING OVER TO DAYTON MOTORS

Remove chain drive from motor sprocket drive.

Identify motor wires and remove from motor (T1-T4-T8-T5).

Identify limit switch wires and remove (3-6 OPEN....5-7 CLOSE).

Assemble new motor and gear box (4 bolts).

Install limit switch support bracket (newly furnished).

Install limit switch, avoid rotating limit switch shaft (limit switch bracket for Rolfe stage is different than the others).

Drill 4 mounting holes in frame (1/2" Diameter):

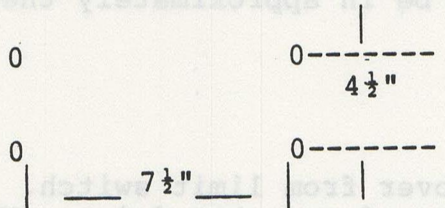

Mount motor assembly to frame.

Using the small sprocket from limit switch, small chain drive and small sprocket for gear box as an assembly, install as a unit with flat sides facing in.

On Rolfe motor, drive assembly goes on left shaft as you look from motor end, tighten down Allen screws of both sprocket drives. If limit switch chain drive has excessive slack, elongate mounting holes in bracket to raise support.

Install large sprocket drive on gear box shaft, this sprocket should rest on cut-out lip of smaller drive. Install hub on shaft and install two bits through hub into large sprocket drive, tighten Allen screws on hub.

The Dayton motor has six wires. They should be wired as follows:

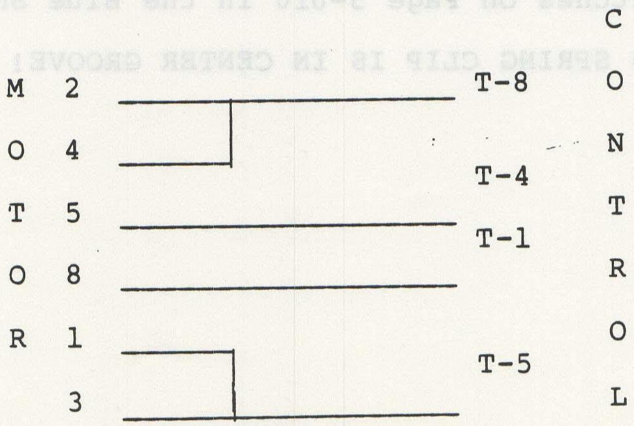

Changing Over to Dayton Motors
Cont.

If your control panel has a fuse holder, change the fuse to MDL7. If your system does not have a fuse holder, remove L1 power input and insert holder and fuse in line using MDL7. Reconnect L1 line coming from fuse to L1. It is also recommended that existing control boxes with Bodine motors be fused with MDL5 fuses to protect starter winding.

Install assembly on stage. Rolfe motor sprocket drive will be in corner (180° from previous installation).

Rewire motor and limit switches. If limit switch shaft has not been rotated, the switches should be in approximately the same position.

RESETTING LIMIT SWITCHES

Remove chain drive, remove cover from limit switch. Push manual close button while checking rotation of sprocket drive. When motor has stopped, open drapes by hand to normal open position, mark track at center of master slide. Close drapes by hand observing rotation of chain. The pull should be the same as the sprocket rotation when the drapes are fully closed.

Install the chain drive on large sprocket. At this point, your close limit should be set.

Push OPEN button and be ready to push STOP if drapes do not stop when they reach original position. If all is well, push CLOSE button and be ready to push STOP button if drapes do not stop at mark.

To adjust open limit, lift spring holder on control knob and push in until spring is in outer groove. Turn adjusting knob counter clockwise while watching for contact "B" to open (contact closest to sprocket), when contact has opened, turn 1/2 turn more, pull knob out and reset spring in center groove. For more information on the limit switches, see Limit Switches on Page 5-010 in the Blue Show Manual.

DO NOT RUN MOTOR UNLESS SPRING CLIP IS IN CENTER GROOVE!

CONTACT BRIDGE IS BELOW STATIONARY CONTACTS

CONTACT BRIDGE IS ABOVE STATIONARY CONTACTS

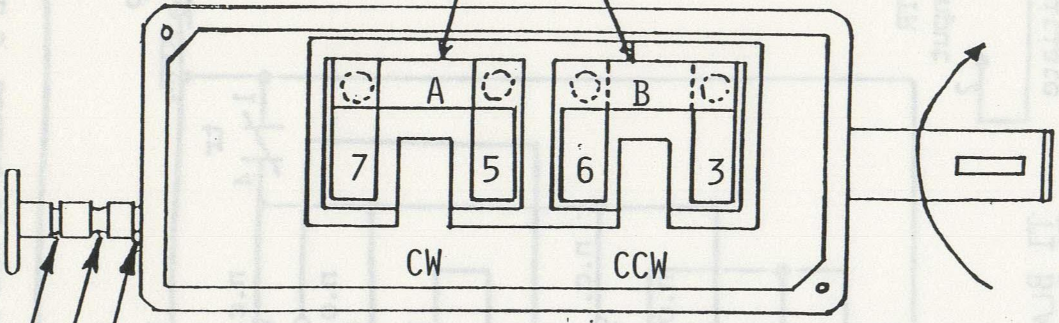

SHAFT ROTATES CLOCKWISE FOR CONTACT (A)

INNER GROOVE FOR ADJUSTING CONTACT (A) TURN COUNTER CLOCKWISE FOR MORE CURTAIN TRAVEL

MIDDLE GROOVE (OPERATING POSITION)

NOTE: SPRING CLIP HOLDING ADJUSTOR MUST BE ON MIDDLE GROOVE WHENEVER LIMIT SWITCH IS OPERATING

OUTER GROOVE FOR ADJUSTING CONTACT (B) TURN CLOCKWISE FOR MORE CURTAIN TRAVEL

BODINE
FOUR WIRE SYSTEM

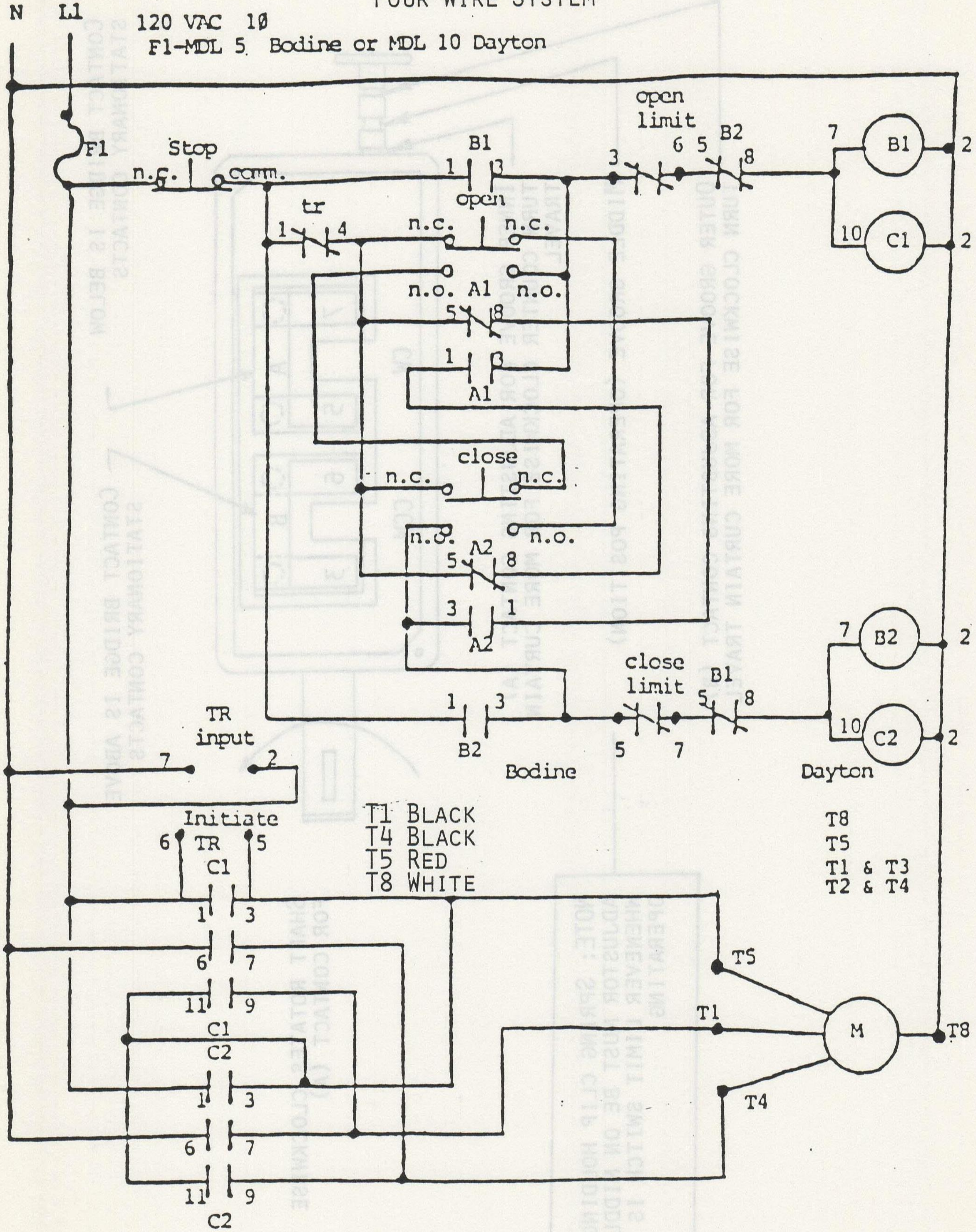
N
L1
120 VAC 10
F1-MDL 5 Bodine or MDL 10 Dayton
F1
Stop
n.c.
comm.
B1
1
3
open limit
3
6
5
B2
8
7
B1
2
open
tr
1
4
n.c.
n.c.
10
C1
2
n.o. A1 n.o.
5
8
1
3
A1
close
n.c.
n.c.
n.o.
n.o.
5 A2 8
3
1
A2
7
B2
2
close limit
B1
1
3
5
8
B2
5
7
10
C2
2
Bodine
Dayton
TR input
7
2
Initiate TR
6
5
C1
1
3
6
7
11
9
C1
C2
1
3
6
7
11
9
C2
T1 BLACK
T4 BLACK
T5 RED
T8 WHITE
T8
T5
T1 & T3
T2 & T4
T5
T1
M
T8
T4

THE "VCR" ADJUSTMENT

The Sony Beta-1 Video Cassette recorder ("VCR") and the black and white "TV" locted in the Interactive Booth, is also used to adjust the character movements. A white roll-a-round cart is provided for convenience.

Connect the "RF" out of the machine to the "VHF" input of the "TV". Connect the Channel 2 output of the machine to one of the "RCA" connectors on the front of the "DBX" box. One connector on the "DBX" box will be for the bottom drawer, which is; Beach Bear, Mitzi, Billy Bob, and Looney Bird. The other connector on the box is for the top drawer, which is; Rolf and Earl, Dook, and Fatz.

Choose the "VCR" tape for the character that you wish to adjust. When the tape is played the character's movements will be repeated many times in sequence with the character on the "TV" monitor.

To adjust the movement, locate the valve bank of the character and turn the adjustment screw on the flow control valve. The valve was explained on Page 3-004 of the Blue Show Manual. Turn the adjustment screw clockwise to slow a movement and counter clockwise to speed the movement (according to the diagram on Page 63 of this section). Remember, you are adjusting the exhausting air.

Adjust the speed of the movement to the speed of the movement of the character on the screen. The "B" flow control valve, which is the bottom one on the Mac valve assembly, controls the movement as it moves away from its natural (static) position. The "A" flow control valve controls the movement as it returns to its natural (static) position.

Until you become familiar with the adjustments, it will be easier to have two people; one to watch the monitor and one to make the adjustments. This should be done on one character per day five days a week.

SHOWBIZ Pizza®

INSTALLATION
AND
OPERATION
MANUAL

CYBERSTAR™

TABLE OF CONTENTS

Packing List 3
Pre-Installation 5
Monitors 7
Block Diagram 9
Installation 11
JVC BR7000 19
Operation 21
VCR Adjust & Diagnostics 25
Symetrix Calibration 29
Character Bit Chart 31
Schematics 43
Trouble Shooting 59

SPP CYBERSTAR PACKING LIST

BOX 1 ____________ 1: JVC BR7000 VCR

BOX 2 ____________ 1: Fisher RK8600U VCR RACK MOUNT KIT

BOX 3 ____________ 1: TRIAD CYBERSTAR SHOW CONTROLLER
____________ 1: CYBERSTAR SHOW CONTROLLER POWER SUPPLY CABLE
____________ 1: 12' SHOW DATA CABLE
____________ 1: VCR TRANSPORT CONTROL CABLE
____________ 1: JUMPER CABLE TO A/V ROUTING SWITCHER

BOX 4 ____________ 1: TRIAD A/V ROUTING SWITCHER
____________ 1: A/V ROUTING SWITCHER POWER SUPPLY

BOX 5 ____________ 1: SYMETRIX 571 AUTOMATIC LEVEL COMPUTER
____________ 1: MANAGER CONTROL PANEL
____________ 1: 75' MANAGER CONTROL CABLE w/DB9 conn.
____________ 1: 75' 3 COND. REMOTE GAIN CABLE
____________ 1: 150' BNC-BNC VIDEO CABLE
____________ 2: 3' BNC-BNC VIDEO CABLES
____________ 1: REALISTIC SUPER-OMNI SENSE MICROPHONE
____________ 1: 100' SENSE MICROPHONE EXTENSION CABLE
____________ 2: 3' RCA-RCA AUDIO CABLES
____________ 1: INSTALLATION MANUAL
____________ 2: CYBERSTAR SHOWTAPES
____________ 1: CYBERSTAR VCR ADJUST TAPE (BETA I)
____________ 1: HOUSE LIGHT ADAPTER BOARD

BOX 6 ____________ 1: WINSTEAD RACK MOUNT TAPE BIN

NOTE: *IF ANY ITEMS ARE MISSING, PLEASE CONTACT BRIAN AT CREATIVE PRESENTATIONS*

(800) 635-2689 OUTSIDE CA.
(800) 635-0524 INSIDE CA.

SPP CYBERSTAR PRE-INSTALLATION

The installation of the ShowBiz CYBERSTAR system is an overnight job. Installation should start in the evening (Sun-Wed) shortly after closing time. Do NOT attempt this installation on a Thurs-Sat night!

The following items MUST be checked prior to installation of the CYBERSTAR system. If any of these items does not conform to specifications, it must be remedied before installation:

SHOW POWER SUPPLIES - Both 24v. supplies should be adjusted to EXACTLY 25 volts DC and the 5v. supplies should read from 4.95v. to 5.25v. with the show NOT playing. Verify that both supplies are supplying sufficient current for the show. You can do this by monitoring the output of the supply with a voltmeter or oscilloscope while a birthday show is playing. Momentary drops in voltage (current foldback) are not acceptable.

BACKGROUND MUSIC AMP - The main background music amplifier must be moved to the control room. Route all cables so that the amp can be positioned on top of the audio rack or on a shelf near the audio rack. The CYBERSTAR system must be connected to the background music amplifier.

FAMILY VISION PROJECTOR SCREEN - The screen up/down control cable must be relocated from the interactive animation booth to the audio rack in the control room.

INTERACTIVE ANIMATION - Although Interactive Animation will operate with Cyberstar, it is highly recommended that the Interactive Animation system be removed prior to installation of Cyberstar. Leaving Interactive Animation in place will prevent taking full advantage of the audio quality capabilities of Cyberstar. Also, due to Cyberstar's continuous play mode, Interactive Animation can only be operated during Background Music segments.

MONITORS - The corporate approved monitor is a NEC PM2571A. All monitors should be mounted and operational prior to installation of the Cyberstar system.

A 150' BNC-BNC cable is provided with your Cyberstar System. This cable is to be used as needed for your Cyberstar monitors. It can be cut to length (if you have additional BNC connectors) or it can be run to the camera input jack of the video distribution amp used for the pick up system and then use that existing wiring to run to your monitors.

CYBERSTAR MONITOR INFORMATION

Only professional monitors should be used with CYBERSTAR. The corporate approved monitor is an NEC PM2571A.

All monitors should be mounted and wired PRIOR to installation of the rest of the CYBERSTAR system. All monitors should be daisy-chained (video out of one feed video in of the next in line) with all monitors except the last in the chain set to high impedance. The last monitor must be set to terminate in the 75 ohm position.

Two monitors are a minimum and four or more are highly recommended. If the minimum of two monitors are used, they are to be hung in the Show Room between the stages and in front of the curtain valance. This mounting location is to be used as future show software calls for interaction of show characters with characters appearing on the monitors. Hanging of the mounts and monitors should be done by outside contractors. This is not a job for the store technician. The monitors and mounts weigh 90 lbs. and must be secured to roof braces with metal brackets only. Contractor labor should run approximately $100 - $150 per monitor not including electrical outlets.

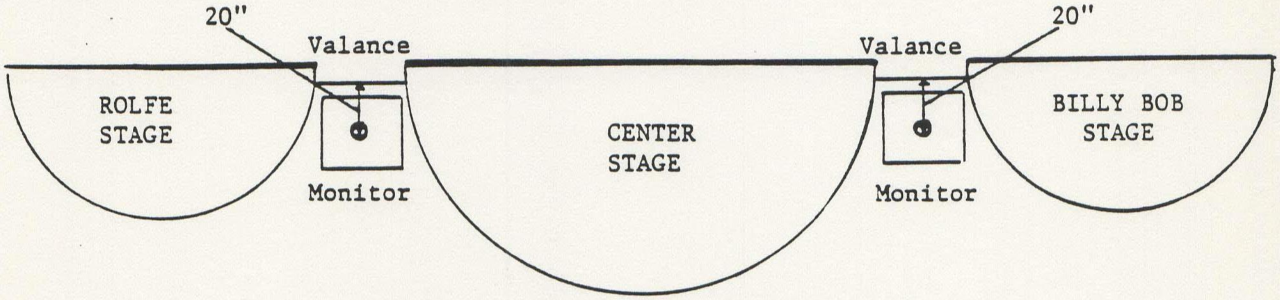

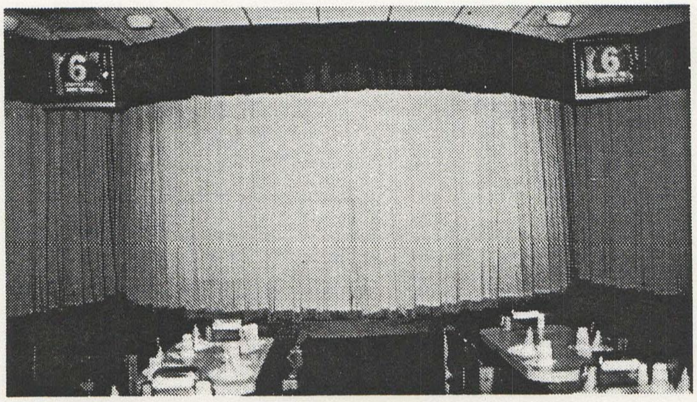

CYBERSTAR
AUDIO/VIDEO BLOCK DIAGRAM

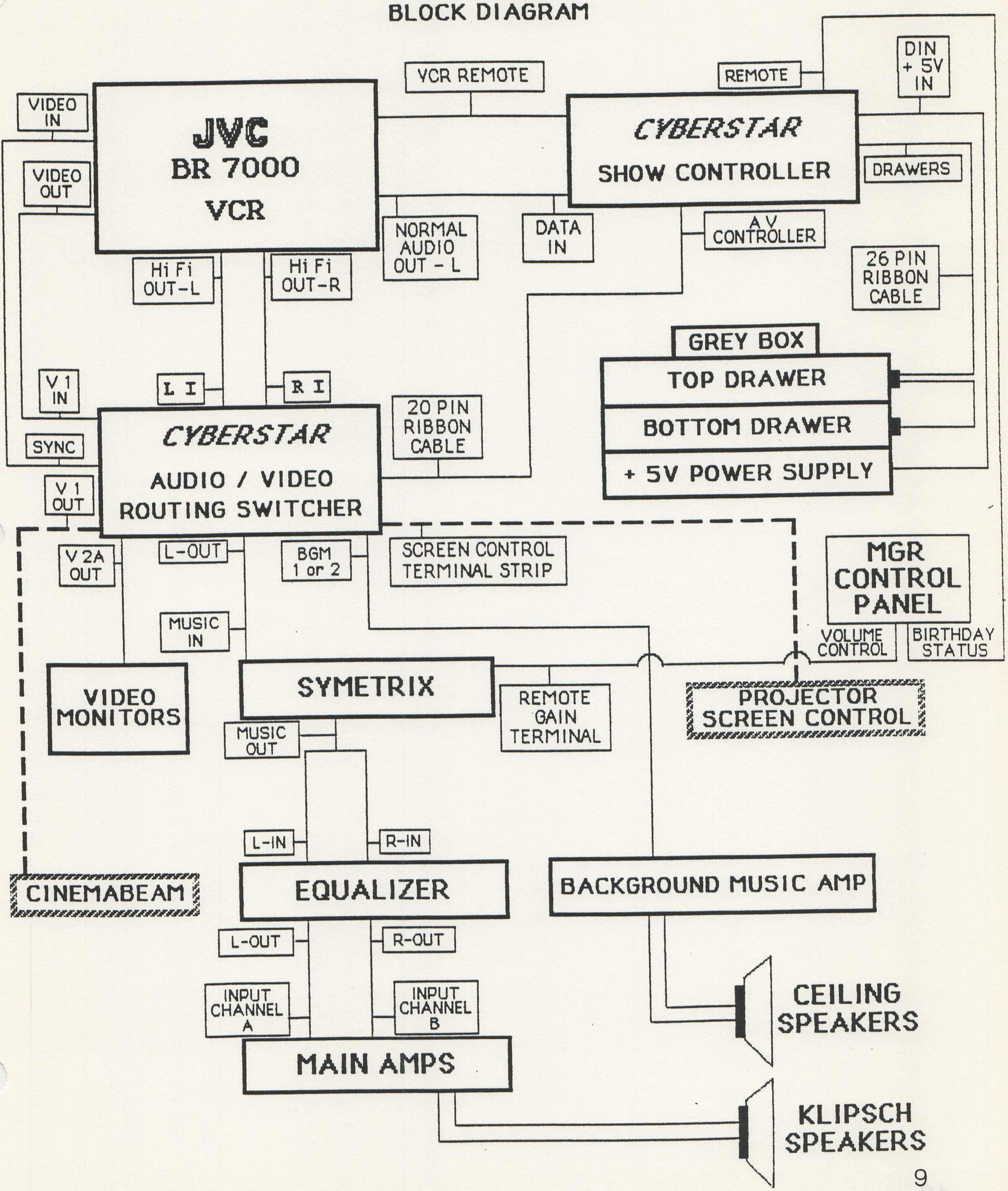

VIDEO IN
VIDEO OUT
JVC BR 7000 VCR
VCR REMOTE
REMOTE
DIN + 5V IN
CYBERSTAR SHOW CONTROLLER
DRAWERS
NORMAL AUDIO OUT - L
DATA IN
A V CONTROLLER
26 PIN RIBBON CABLE
Hi Fi OUT-L
Hi Fi OUT-R
GREY BOX
TOP DRAWER
BOTTOM DRAWER
+ 5V POWER SUPPLY
V 1 IN
L I
R I
20 PIN RIBBON CABLE
SYNC
CYBERSTAR AUDIO / VIDEO ROUTING SWITCHER
V 1 OUT
V 2A OUT
L-OUT
BGM 1 or 2
SCREEN CONTROL TERMINAL STRIP
MGR CONTROL PANEL
VOLUME CONTROL
BIRTHDAY STATUS
MUSIC IN
VIDEO MONITORS
SYMETRIX
REMOTE GAIN TERMINAL
PROJECTOR SCREEN CONTROL
MUSIC OUT
L-IN
R-IN
CINEMABEAM
EQUALIZER
BACKGROUND MUSIC AMP
L-OUT
R-OUT
INPUT CHANNEL A
INPUT CHANNEL B
MAIN AMPS
CEILING SPEAKERS
KLIPSCH SPEAKERS

SPP CYBERSTAR INSTALLATION

READ ALL installation instructions and refer to the system block diagram prior to beginning the actual installation.

Steps 21 through 26 can be assigned to a competent assistant to be begun while the technician begins the rest of the installation. If an assistant is not available, the technician may run the cables described in steps 21-26 the day before the final installation.

WARNING! Disconnect power from the audio rack and computer before beginning the disassembly!

1. ________ Remove the reel-to-reel tape decks from the audio rack. Be sure to disconnect all cables from the rear of the decks before removing them. Save all audio cables for use with CYBERSTAR.

2. ________ Remove the dbx/tape select box from the audio rack. Save all audio cables.

3. ________ Remove ALL audio cables from the audio rack with the exception of those connected to the equalizer, main amplifiers and speakers.

4. ________ Install the Symetrix controller and then the VCR rack mount kit directly above the UREI equalizer.

Note: *Due to the weight of the VCR, the rack mount kit must be attached to the front AND back support rails of the audio rack. This may require some drilling in the back of the audio rack. See the manufacturers notes enclosed with the rack mount kit for installation details.*

5. ________ Install the JVC BR7000 VCR in the rack and mount the VCR front cover panel. Next mount the CYBERSTAR A/V Routing Switcher directly above the VCR and then mount the CYBERSTAR Show Controller above the A/V Routing Switcher.

Note: *The Winstead rack mount tape bin will mount directly above the Cyberstar Show Controller but can wait until the rest of the system has been installed and is operational.*

6. __________ Using an RCA patch cable (removed from reel-to-reel tape decks), connect the Audio Out (Hi-Fi) outputs from the VCR to the LI (left input) and RI (right input) jacks on the rear of the CYBERSTAR A/V Routing Switcher. Make sure to match the proper channels (left to left and right to right).

7. __________ Using another RCA patch cable, connect the Audio Out left (normal) output of the VCR to the Data input on the CYBERSTAR Show Controller.

8. __________ Using one of the 3 ft. BNC-to-BNC cables, connect the VIDEO IN input of the VCR to either of the outputs labeled "SYNC" on the CYBERSTAR A/V Routing Switcher. Use the other 3 ft. BNC-to-BNC cable to connect the VIDEO OUT output of the VCR to the VIDEO 1 IN jack on the CYBERSTAR A/V Routing Switcher.

9. __________ Make sure that the FULL REPEAT switch on the back of the VCR is in the OFF position. Also verify that the Video AGC, HiFi Record and Noise Reduction switches grouped together on the front of the VCR are all in the OFF position.

10. __________ The video line from the monitors (gameroom and showroom) plugs into the V2A OUT output of the CYBERSTAR A/V Routing Switcher. If you have a projection TV, the video line from it will plug into the V1 OUT jack.

Note: *Showroom and gameroom monitors should be daisy-chained (video out of one feeds video in of the next in line) and the last monitor on the line should be terminated (lo impedance - 75 ohms).*

11. __________ After verifying that the power is off on the show computer, remove the Playback boards from the top and bottom drawers. Remove the Tape Control Card from the Dual PC mount (the bottom card below the house light dim board in the bottom drawer.)

12. __________ Connect the ribbon cable from the CYBERSTAR Show Controller connection marked 'Drawers' to the tunnel connection where the Playback boards were just unplugged. Observe that the proper cable from the CYBERSTAR Show Controller is in the proper drawer. The connector in the middle of the cable goes to the top drawer and then loops to the bottom drawer where the connector at the end of the ribbon cable plugs into the tunnel. Connect the twenty pin jumper ribbon cable from the Show Controller to the A/V Routing Switcher. OBSERVE POLARITY ON ALL RIBBON CONNECTIONS.

13. __________ Plug the House Light adapter board into the Dual PC Mount where the Tape Control card was.

14. __________ Remove the output wires from one of the 5 volt power supplies in the grey cabinet and parallel them to the other 5 volt power supply. Then route the Cyberstar Show Controller power supply cable (2 cond. tinned - DIN plug) through the power cable access hole in the rear of the grey cabinet and connect with the now available 5 volt power supply in the front of the grey cabinet (both drawers operating on one 5 volt supply and the Cyberstar Show Controller operating solely on the other 5 volt supply.) OBSERVE POLARITY, Black to Green (ground) and White to Orange (+5v.) Attach wire ties to dress out the cable.

15. __________ Connect the power cords to the Symetrix unit, CYBERSTAR A/V Routing Switcher, and the JVC BR7000 VCR. The A/V Routing Switcher has a special power supply that plugs into a 5-pin DIN plug on the rear of the unit.

16. ______ Using an RCA patch cable, clip the plug from one end and strip and tin the leads. Plug the RCA end into the jack marked "L" on the CYBERSTAR A/V Routing Switcher (left audio out). The shielded portion of the bare end of the wire should be connected to the terminal block on the Symetrix unit marked "MUSIC IN GND". The center conductor should be connected to the terminal marked "MUSIC IN +." Connect a jumper from the "MUSIC IN GROUND" to the "MUSIC IN Low (-)."

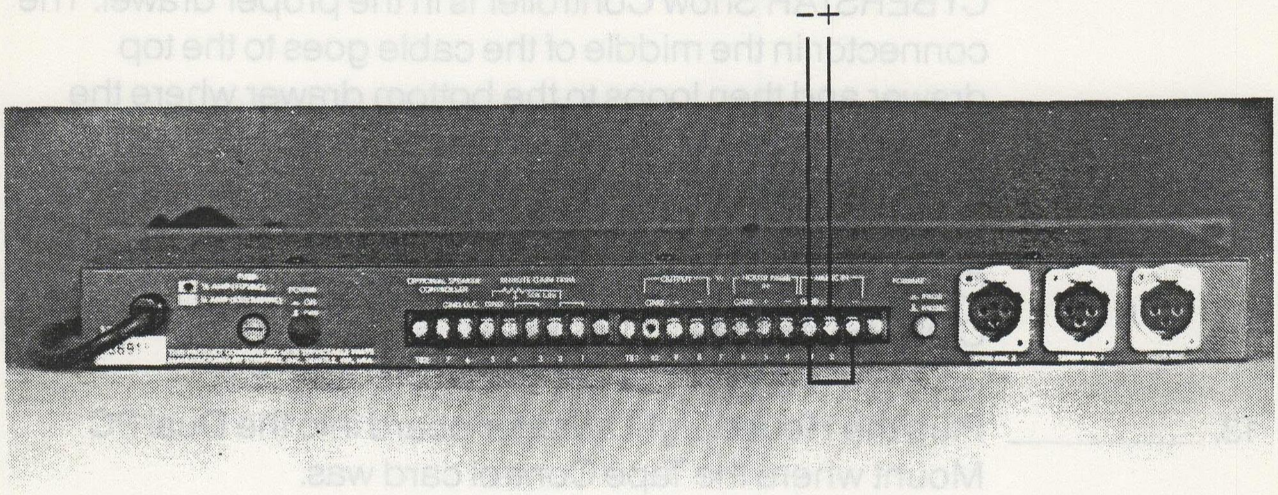

17. ______ Be sure that the FORMAT switch on the rear of the Symetrix unit is switched to MUSIC.

18. ______ You will find two wires that come from the inputs of the UREI equalizer. Clip the RCA plugs from the ends of these wires and strip and tin the ends. These wires will be tied together in parallel (Shield to shield, center to center). Then connect the shield to the terminal marked "OUTPUT GND" on the rear of the Symetrix unit. Connect the center conductor to the terminal marked "OUTPUT +". Do NOT connect anything to the LOW (-) OUTPUT.

Note: *The outputs of the UREI equalizer should still be connected to the inputs of the YAMAHA amplifiers. The audio path is now complete. Audio travels from the outputs of the VCR (Hi-Fi Audio Out) to the inputs of the CYBERSTAR A/V Routing Switcher (LI and RI). From the output of the CYBERSTAR A/V Routing Switcher ("L" left audio out), the audio travels to the MUSIC IN input of the Symetrix. The OUTPUT of the Symetrix feeds both input channels of the UREI equalizer. The outputs of the UREI equalizer then feed the inputs of the main amplifiers. Check to make sure that the input ground selector switch above the cannon jacks on the back of the Yamaha amps are both to the OUTSIDE position (pin 3 HOT.)*

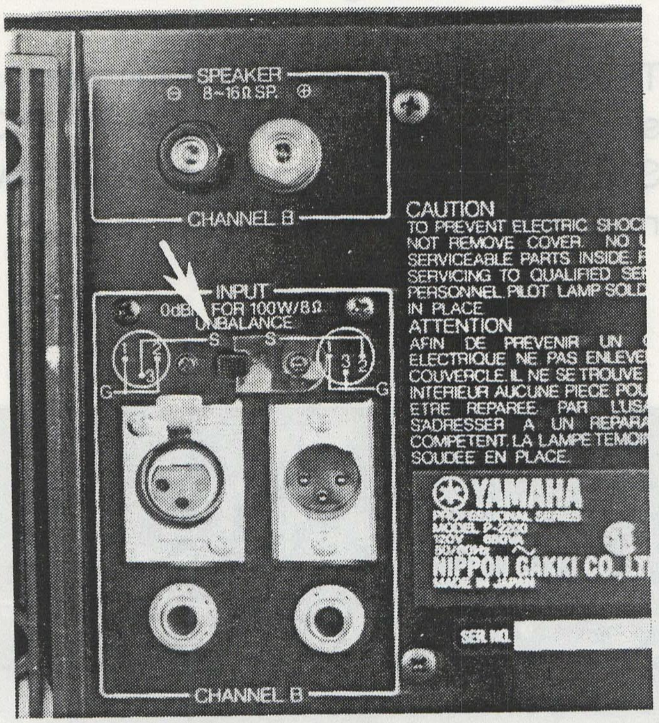
SPEAKER
⊖ 8~16Ω SP. ⊕
CHANNEL B
INPUT
0dBm FOR 100W/8Ω
UNBALANCE
S S
G G
CHANNEL B
CAUTION
TO PREVENT ELECTRIC SHOC
NOT REMOVE COVER. NO
SERVICEABLE PARTS INSIDE.
SERVICING TO QUALIFIED SE
PERSONNEL. PILOT LAMP SOL
IN PLACE.
ATTENTION
AFIN DE PREVENIR UN
ELECTRIQUE NE PAS ENLEVE
COUVERCLE. IL NE SE TROUVE
INTERIEUR AUCUNE PIECE PO
ETRE REPAREE PAR L'US
S'ADRESSER A UN REPAR
COMPETENT. LA LAMPE TEMOI
SOUDEE EN PLACE.
YAMAHA
NIPPON GAKKI CO., LT
SER. NO.

19. ____________ There are two options for connecting the background music amp to the CYBERSTAR system. Normally, you connect the "BGM 2" audio out of the CYBERSTAR A/V Routing Switcher to the input of your background music amp. If you do not want birthday shows to play over your background music system, then connect the background music amp to the "BGM 1" output of the A/V Routing Switcher. If the "BGM 1" output is selected, you must disconnect the ceiling speakers in the showroom and no mic paging will be heard in the showroom.

20. ____________ Connect the Transport Control cable from the CYBERSTAR Show Controller to the remote jack on the JVC VCR.

21. __________ The sensing microphone may now be mounted in the showroom ceiling. Pick a spot near the center of the showroom but as far as possible from any ceiling-mounted background music speakers. You should mount the microphone to the ceiling tile with the microphone body through the ceiling and it should point downward.

22. __________ The 100 ft. extension cable for the sensing microphone should be connected to the microphone. Run the cable through the ceiling to the control room.

23. __________ The other end of the 100 ft. extension cable (sensing mic.) should be plugged into the SENSE MIC 1 input of the Symetrix unit. The microphone will now provide ambient noise sensing to the unit.

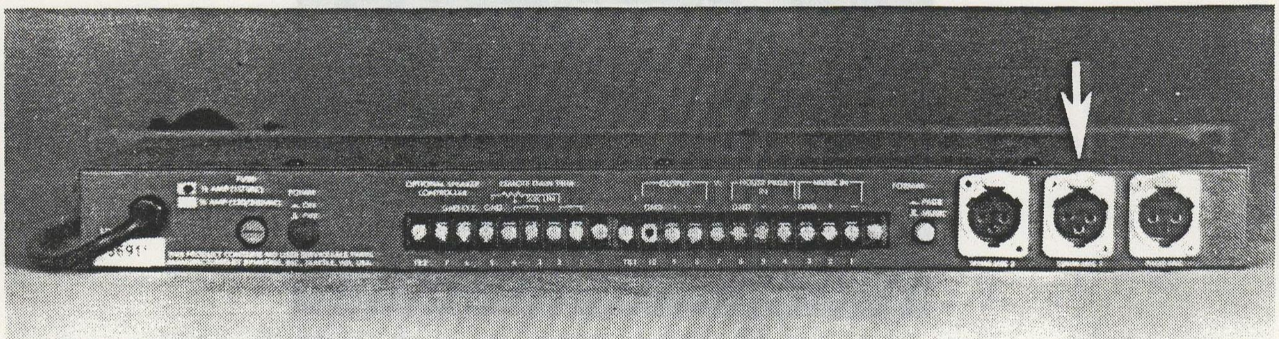

24. __________ THIS STEP FOR PROJECTION TV LOCATIONS ONLY! Locate the screen up/down control cable previously used by the Family/Vision controller. This will be a seven-conductor cable coming from the projection screen. Find the orange wire and the red wire, strip them, and tie them

together. Then, locate the green wire and the black wire and strip both of them. All other wires in this cable are unused. Connect the red/orn wire to the COM terminal next to RAISE and LOWER on the lower terminal block of the CYBERSTAR A/V Routing Switcher. Connect the green wire to the RAISE terminal and the black wire to the LOWER terminal.

25. ____________ Run the 75 ft. manager control cable in the ceiling from the control room to the showroom. The end with the DB9 should be in the control room while the bare ends will be in the showroom. At the same time run the 3 conductor remote gain cable alongside the manager control cable.

26. ____________ After drilling a mounting hole in the showroom wall, run the cable down through the wall and through the hole. Attach the manager control panel and the remote gain pot to the cables as described below. Then, mount the panel to the wall or hostess station with screws.

The manager control panel should be wired as follows:

DB9	Wire color	Manager Control Panel Terminals
Pin 1	Brown wire	B'day warning LED (red LED)
Pin 3	Green wire	B'day select LED (green LED)
Pin 6	Red wire	B'day switch
Pin 8	Black wire	B'day switch ground
Pin 9	White wire	+5v LED limit resistors (the limit resistor terminals must be jumpered on the manager control panel terminal strip)

27. ________ Plug the manager control cable into the CYBERSTAR Show Controller and remove the jumpers and hookup the remote gain wires to the Symetrix as described in the diagram.

Remote Gain to Symetrix wiring:

Symetrix Terminal	Gain Pot Color Code
Pin 2	White
Pin 4	Black
Pin 5	Red

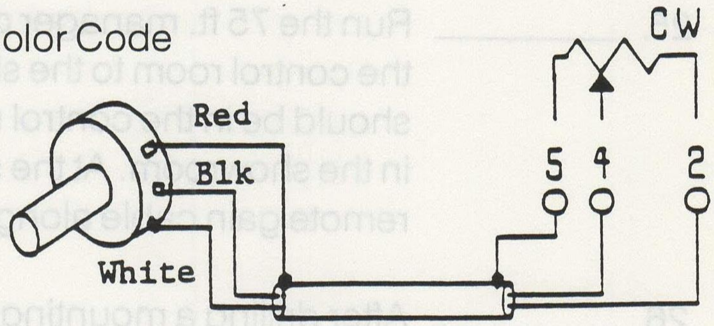

28. ________ Installation is now complete. Refer to the SPP CYBERSTAR OPERATION instructions in the following chapter for starting procedures.

JVC BR7000

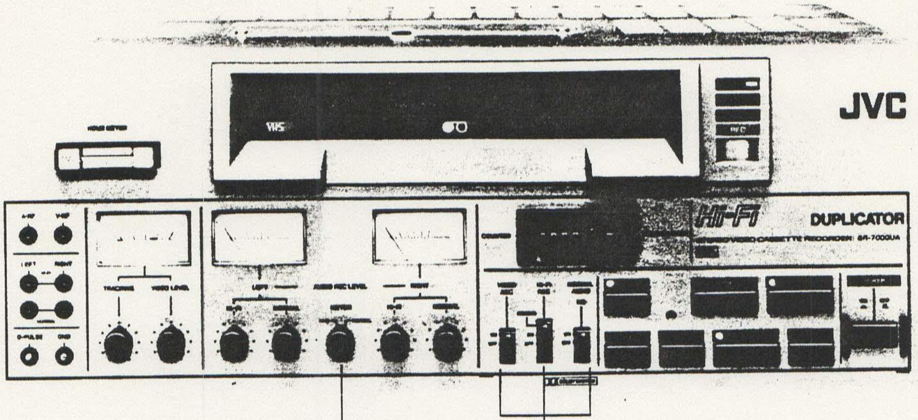
JVC
Hi-Fi
DUPLICATOR
METER SELECT
ALL SET TO OFF

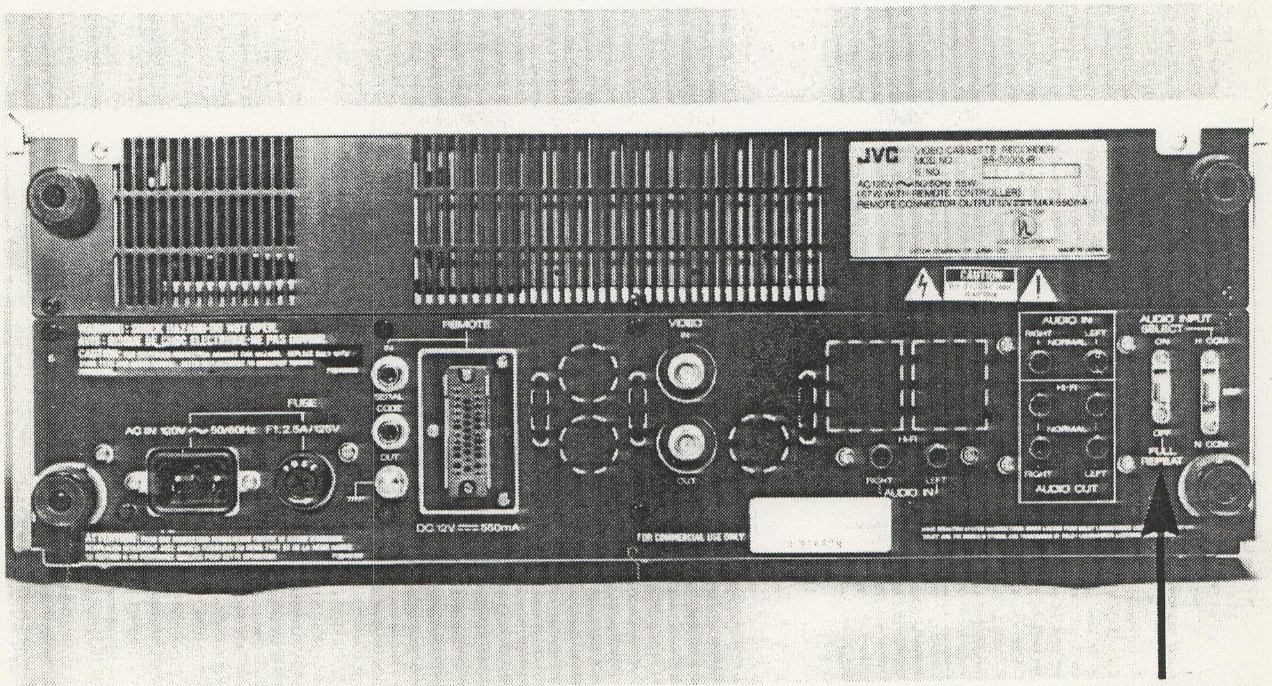
JVC
CAUTION
REMOTE
VIDEO
AUDIO IN
AUDIO OUT
AUDIO INPUT SELECT
FULL REPEAT
FOR COMMERCIAL USE ONLY
FULL REPEAT SET TO OFF

SPP CYBERSTAR OPERATION

The following operation guidelines will help you to test the operation of your CYBERSTAR system. If you encounter any problems during testing, refer to the troubleshooting section.

Turn power on to the grey controller and check the Show Controller. The Alert LED should be lit and the LCD displaying the software version identifier message. Turn power on to the audio rack and make sure that the individual power switches for each component of the audio system are on. Push the 'mode' button on the Symetrix unit twice and note that the 'bypass' LED is flashing. This means that the Symetrix is in bypass mode. Refer to the Symetrix Level Control Calibration section for proper calibration procedures.

Insert a CYBERSTAR showtape into the VCR. The VCR should rewind if needed and begin to play at the beginning of the tape. Verify that data is present on the tape by switching the meters to 'Normal'. The Left VU meter should show a steady signal at approximately 0 VU. Now switch the meters to 'Hi-Fi'. The VU meters should now indicate the music level (probably background music). Now verify that data is being fed to the Show Controller by watching the LCD panel on the front of the show controller. The display should change from the CYBERSTAR Software Version Identifier Message to ''skit in progress'' until the first countdown sequence begins and then display ''CYBERSTAR (C) 1989.'' At this time, the monitors should be displaying the video countdown. This verifies proper data decoding by the Show Controller.

You may now turn up the volume controls on the main show amplifiers and the background music amplifier so that the background music is at a comfortable level. Verify that music is present at all speakers in the showroom and throughout the background music system.

Check the operation of the manager control panel. Pushing the 'Birthday Select' button should toggle the 'Birthday Indicator' LED on and off. The 'Birthday Warning' indicator should begin to flash approximately three minutes before a birthday show becomes available (for the first three minutes of each background / countdown segment.) The LED will stop flashing once the beginning of the 'birthday window' has been passed.

While in the showroom, check that you have good, stable video on the monitors. Monitors should display a countdown before shows start and they should also display video during the cartoon segments and all Rock-A-Fire show segments.

Each countdown segment has a horseshoe shaped ring of adjacent blue spheres surrounding the rotating number in the center of the screen. Every 10 seconds one of the spheres will change from blue to bronze in a counter-clockwise manner. When all of the Spheres have changed to bronze, the Birthday will begin if selected. This is a ''clock'' for employees to judge when the birthday will begin and whether they want to play it or wait until the next available Birthday show. At any time, including during a show, birthday or cartoon, up until all the spheres have turned bronze during a countdown, the next available Birthday show can be either selected for play or deselected to not play.

Select a birthday show by pressing the 'Birthday Select' button on the manager control panel. The green LED lit indicates that the next available birthday show will play. Three minutes after the beginning of the countdown, the birthday show should play and the video countdown continue on the monitors.

During the next background music segment, verify that the 'Birthday Indicator' is off. When the countdown spheres have all changed to bronze (three minutes after the beginning of the countdown), background music should continue and birthday audio should not be heard and the characters should not be moving.

Holding in the 'Birthday Select' button for approximately 8 seconds will make the green LED start flashing. This indicates an 'emergency hold' mode and the tape will stop when the beginning of the Birthday Show is reached. The system will then wait indefinitely until the 'Birthday Select' button is pressed again at which time the Birthday Show will play. Due to the handling of the tape in the mode, it is to be used in emergencies only when a birthday is absolutely required and can't wait until the next available birthday on the tape (never longer than 15 minutes.) Excessive use of this feature may cause premature tape and VCR failures.

At the end of the CYBERSTAR showtape, a rewind signal should cause the tape to be rewound back to the beginning. The rewind process takes about three minutes. During this time, no video or background music will be seen / heard. If the system has performed correctly to this point, you now have a working CYBERSTAR system!

POWER DOWN PROCEDURE - The procedure to power down the system is to press the UP and DOWN buttons on the Show Controller at the same time and hold them in until the tape ejects from the VCR. Then power down the rest of the system as you did previous to Cyberstar. The tape must be ejected from the system at night in order to maintain its proper life. Shutting off power to the VCR with the tape in the machine will keep the tape spooled around the heads and will shorten the life of the tape as well as add unneeded stress to the VCR transport.

WARNING! Under NO circumstances should the Record button ever be used. This machine will record over a tape even with the Record Protect tab removed.

CYBERSTAR VCR ADJUST & DIAGNOSTICS ROUTINE

A diagnostic routine has been incorporated in the Show Controller software to enable the technician to set up CYBERSTAR for VCR Adjusting the characters and a new routine that allows the Show Controller to cycle each character movement for troubleshooting. This new method is NOT to be used for character movement adjustments (the VCR ADJUST TAPE is the only approved method of properly synchronizing character movements) but rather is provided to test the actual physical operation of individual character movements.

With NO tape in the BR7000 and the LCD displaying the CYBERSTAR Software Version Identifier message:

```
CyberStar      1.0
(c) 1989     TRIAD
```

Software Version Identifier message

Press the ENTER button once and the LCD display will change to:

```
DIAGNOSTICS
Press [Enter]
```

Press the ENTER button once again and the LCD display will change to:

```
DIAGNOSTICS
VCR ADJUST MODE
```

Press the ENTER button once again to enter the VCR Adjust mode and the LCD display will change to:

```
VCR ADJUST MODE
```

This mode will initiate opening all three curtains and then pass data through the system for VCR Adjustment of the characters. To use the Sony SLP303 Beta machine, run the data line from the Sony VCR to the left Normal input on the JVC BR7000 VCR and adjust the input level to 0 VU.

Play your new VCR Adjust tape just as with the old system viewing the characters on the TV wired to the Sony VCR. The new VCR Adjust tape contains all characters on a single tape starting with Billy Bob. After completing your adjustment, stop the tape at the end of the character you were adjusting and press the reset button on the CYBERSTAR Show Controller to exit the VCR Adjust mode or press ENTER to return to the Software Version Identifier message. A VHS version of the CHARACTER ADJUST TAPE is available to order. It will work in the BR7000 but that machine does NOT have a search mode, so you can not visually search through the tape to find particular areas. The startup procedure for the VHS version is the same as the BETA I. When you have accessed the VCR ADJUST MODE on the LCD display, insert your adjust tape into the BR7000 and manually press the PLAY button on the VCR. The tape will roll and operate the characters with video displaying on the Cyberstar monitors. When you have finished a character, press the EJECT button on the VCR and do not rewind the tape. When you are ready the next day for adjusting the next character, the tape will be ready for that character.

If you wish to access the character movement test routine, when the LCD is displaying:

DIAGNOSTICS
VCR ADJUST MODE

Use the UP and DOWN buttons to access the characters (they will display on the bottom line of the LCD display.

DIAGNOSTICS
ROLFE

At this point, using the UP and DOWN buttons will allow you to cycle through the characters with the second line of the LCD display showing the current character selected. Cycle through the characters (Looney Bird character movements are contained with Billy Bob) and then return to ROLFE by using the UP and DOWN buttons.

Press the ENTER button once again and the LCD display will change to:

ROLFE
Mouth

At this point, using the UP and DOWN buttons will allow you to cycle through the individual character movements for the character displayed on the top line of the LCD display.

Cycle through the character movements and then return to MOUTH by using the UP and DOWN buttons.

Press the ENTER button once again and the LCD display will begin alternating ON and OFF in the upper right hand corner of the LCD display. Go into the Show Room and watch Rolfe. His mouth should be opening and closing at an interval of several seconds.

Pressing the ENTER button again will return the LCD display to the CYBERSTAR Software Version Identifier message. The procedure can be repeated again to select a different movement or a different character. When you are finished with running DIAGNOSTICS, a show tape can be inserted into the VCR and the system will auto startup if the LCD display is showing the Software Version Identifier message or by pressing the RESET button if you are still in the Diagnostic Routine.

SYMETRIX LEVEL CONTROL CALIBRATION

Perform calibration of the Symetrix level control unit after installation and testing of CYBERSTAR is complete.

READ the Symetrix manual BEFORE calibration to familiarize yourself with it.

Use a miniature screwdriver to adjust the SENSE MIC 1 sensitivity control to about 75% of its adjustment range.

Make sure that calibration of the unit is done while a stage show is playing and the showroom is totally empty and quiet before calibrating the unit.

Press the MODE button twice to put the unit into BYPASS mode. The BYPASS LED should flash. Then adjust the main amplifier level controls for a comfortable listening level in the showroom.

Press the MODE button once to exit BYPASS mode and press once again to enter the MINIMUM level calibration mode. Now adjust the MINIMUM level control for the lowest required sound level (empty showroom.) The unit will stay in the MINIMUM calibration for about eight seconds after you have stopped adjusting it.

Now, the unit will automatically go to MAXIMUM level calibration mode. You may now adjust the MAXIMUM level control to a level that would be slightly HIGHER than the highest level you would ever expect it to attain (fully packed showroom.) After eight seconds, the unit will return to its normal mode of operation.

If, at any time, the SENSE INPUT ERROR LED flashes, then you may be having problems with either the physical connection of the sense microphone or the sensitivity adjustment.

The Symetrix unit is now calibrated. Any settings on the equalizer or main amps must be kept EXACTLY as they are. Changing these settings would require recalibration of the unit.

The only audio that should be adjusted unless recalibrating the system is the remote gain control on the manager's control panel.

NOTE: *The only controls that should be adjusted are the AVERAGING TIME and RATIO SENSE:OUTPUT pots.*

The Averaging Time pot determines the amount of time the computer will take before making any volume adjustments (the shorter the time set the faster the unit will make changes.) This control should be set between 90 sec. and 5 min. depending on variables in each location. The exact setting must be determined by the technician over a period of actual use. If the audio levels are changing too often, then adjust the pot slightly clockwise(longer average time) and vice-versa.

The Ratio Sense:Output determines how great a change in level will occur based on the level of crowd noise sensed. This setting must also be determined by the technician over a period of actual use. Start with a setting of 1:1 (12 o'clock position.) If the show volume increases too much in relation to the level of crowd noise, then slightly adjust the Ratio control counter-clockwise and if the show does not get loud enough in relation to the level of crowd noise, then slightly adjust the Ratio control clockwise.

Any adjustments to the Averaging Time or Ratio Sense:Output should be very minor changes and then evaluated over a period of at least 1 full day of operation. Further changes, if needed, should follow the same procedure. It may take several weeks to precisely ''tune'' the unit to your particular location.

CHARACTER BIT CHARTS
ROLFE

NO.	DESCRIPTION	DRAWER	L.D.#
1	MOUTH	TOP	1
2	LEFT EAR	TOP	9
3	RIGHT EAR	TOP	10
4	LEFT EYELID	TOP	2
5	RIGHT EYELID	TOP	3
6	EYES LEFT	TOP	4
7	EYES RIGHT	TOP	5
8	HEAD LEFT	TOP	6
9	HEAD RIGHT	TOP	7
10	HEAD UP	TOP	8
11	LEFT ARM RAISE	TOP	11
12	LEFT ARM TWIST	TOP	12
13	LEFT ELBOW	TOP	13
14	RIGHT ARM RAISE	TOP	17
15	RIGHT ARM TWIST	TOP	18
16	RIGHT ELBOW TWIST	TOP	19
17	EARL HEAD TILT	TOP	20
18	EARL MOUTH	TOP	36
19	EARL EYEBROW	TOP	37
20	BODY TWIST LEFT	TOP	14
21	BODY TWIST RIGHT	TOP	15
22	BODY LEAN	TOP	16

DOOK

NO.	DESCRIPTION	DRAWER	L.D.#
1	MOUTH	TOP	30
2	LEFT EAR	TOP	23
3	RIGHT EAR	TOP	24
4	LEFT EYELID	TOP	26
5	RIGHT EYELID	TOP	27
6	EYES LEFT	TOP	28
7	EYES RIGHT	TOP	29
8	HEAD LEFT	TOP	25
9	HEAD RIGHT	TOP	21
10	HEAD UP	TOP	22
11	LEFT ARM SWING	TOP	33
12	RIGHT ARM SWING	TOP	34
13	LEFT ELBOW	TOP	35
14	RIGHT ELBOW	TOP	31
15	HI-HAT CYMBAL	TOP	32
16	BASS DRUM	TOP	63
17	BODY LEAN	TOP	64

FATZ

NO.	DESCRIPTION	DRAWER	L.D.#
1	MOUTH	TOP	45
2	LEFT EYELID	TOP	41
3	RIGHT EYELID	TOP	42
4	EYES LEFT	TOP	43
5	EYES RIGHT	TOP	44
6	HEAD LEFT	TOP	54
7	HEAD RIGHT	TOP	55
8	HEAD TIP LEFT	TOP	51
9	HEAD TIP RIGHT	TOP	52
10	HEAD UP	TOP	53
11	LEFT ARM SWING	TOP	57
12	RIGHT ARM SWING	TOP	58
13	LEFT ELBOW	TOP	59
14	RIGHT ELBOW	TOP	60
15	FOOT TAP	TOP	61
16	BODY LEAN	TOP	62

BEACH BEAR

NO.	DESCRIPTION	DRAWER	L.D.#
1	MOUTH	BOTTOM	16
2	LEFT LID	BOTTOM	1
3	RIGHT LID	BOTTOM	2
4	EYES CROSS	BOTTOM	3
5	HEAD LEFT	BOTTOM	6
6	HEAD RIGHT	BOTTOM	7
7	HEAD UP	BOTTOM	8
8	RIGHT ARM RAISE	BOTTOM	11
9	RIGHT ARM TWIST	BOTTOM	12
10	RIGHT ELBOW TWIST	BOTTOM	13
11	RIGHT WRIST	BOTTOM	14
12	LEFT HAND SLIDE	BOTTOM	4
13	GUITAR RAISE	BOTTOM	5
14	LEFT LEG KICK	BOTTOM	9
15	RIGHT LEG KICK	BOTTOM	10
16	BODY LEAN	BOTTOM	15

MITZI

NO.	DESCRIPTION	DRAWER	L.D.#
1	MOUTH	BOTTOM	35
2	LEFT EAR	BOTTOM	26
3	RIGHT EAR	BOTTOM	27
4	LEFT LID	BOTTOM	31
5	RIGHT LID	BOTTOM	32
6	EYES LEFT	BOTTOM	33
7	EYES RIGHT	BOTTOM	34
8	HEAD LEFT	BOTTOM	28
9	HEAD RIGHT	BOTTOM	29
10	HEAD UP	BOTTOM	30
11	LEFT ARM RAISE	BOTTOM	23
12	RIGHT ARM RAISE	BOTTOM	18
13	LEFT ELBOW	BOTTOM	24
14	RIGHT ELBOW	BOTTOM	19
15	LEFT ARM TWIST	BOTTOM	25
16	RIGHT ARM TWIST	BOTTOM	20
17	BODY TWIST LEFT	BOTTOM	36
18	BODY TWIST RIGHT	BOTTOM	37
19	BODY LEAN	BOTTOM	38

BILLY BOB

NO.	DESCRIPTION	DRAWER	L.D.#
1	MOUTH	BOTTOM	46
2	LEFT LID	BOTTOM	47
3	RIGHT LID	BOTTOM	48
4	EYES LEFT	BOTTOM	49
5	EYES RIGHT	BOTTOM	50
6	HEAD LEFT	BOTTOM	51
7	HEAD RIGHT	BOTTOM	52
8	HEAD TIP LEFT	BOTTOM	53
9	HEAD TIP RIGHT	BOTTOM	54
10	HEAD UP	BOTTOM	55
11	LEFT HAND SLIDE	BOTTOM	39
12	RIGHT ARM RAISE	BOTTOM	56
13	RIGHT ARM TWIST	BOTTOM	57
14	RIGHT ELBOW TWIST	BOTTOM	58
15	RIGHT WRIST	BOTTOM	59
16	GUITAR RAISE	BOTTOM	40
17	BODY TWIST LEFT	BOTTOM	61
18	BODY TWIST RIGHT	BOTTOM	62
19	FOOT TAP	BOTTOM	44
20	BODY LEAN	BOTTOM	63

LOONEY BIRD

NO.	DESCRIPTION	DRAWER	L.D.#
1	MOUTH	BOTTOM	17
2	LEFT LID	BOTTOM	41
3	RIGHT LID	BOTTOM	42.
4	EYES CROSS	BOTTOM	43
5	HEAD LEFT	BOTTOM	21
6	HEAD RAISE	BOTTOM	22

PROPS

NO.	DESCRIPTION	DRAWER	L.D.#
1	SUN MOUTH	TOP	38
2	SUN RAISE	TOP	39
3	DUAL PRESSURE REGULATOR	TOP	40
4	MOON MOUTH	TOP	46
5	MOON RAISE	TOP	47
6	LOONEY BIRD HANDS	TOP	48
7	SPIDER (B'DAY WARNING)	TOP	49
8	BABY BEAR	TOP	50

SPOT LIGHTS

NO.	DESCRIPTION	DRAWER	L.D.#
1	MITZI SPOT	TOP	81
2	BEACH BEAR SPOT	TOP	82
3	LOONEY BIRD SPOT	TOP	83
4	BILLY BOB SPOT	TOP	84
5	FATZ SPOT	TOP	85
6	DOOK SPOT	TOP	86
7	ROLFE SPOT (DOWN)	TOP	87
8	ROLFE SPOT (UP)	TOP	88

CURTAINS

STAGE RIGHT OPEN	TOP	89
STAGE RIGHT CLOSE	TOP	90
CENTER STAGE OPEN	TOP	91
CENTER STAGE CLOSE	TOP	92
STAGE LEFT OPEN	TOP	93
STAGE LEFT CLOSE	TOP	94

S.E. LIGHTS

NO.	DESCRIPTION	DRAWER	L.D.#
1	RAINBOW RED	BOTTOM	94
2	RAINBOW YELLOW	BOTTOM	95
3	APPLAUSE SIGN	BOTTOM	70
4	BLUE BEHIND BACKDROP (4)	BOTTOM	81
5	AMBER ON BACKDROP (2)	BOTTOM	82
6	BLUE ON BACKDROP (2)	BOTTOM	83
7	RED ON BACKDROP (4)	BOTTOM	84
8	BLUE ON BACKDROP (4)	BOTTOM	85
9	BUSHES GREEN-CENTER GREEN	BOTTOM	86
10	BUSHES AMBER-CENTER RED	BOTTOM	87
11	DRUM STAND LIGHTS	BOTTOM	75
12	GAS PUMP / COACH LIGHT	BOTTOM	91
13	SERVICE STA. RED	BOTTOM	92
14	SERIVCE STA. BLUE	BOTTOM	93
15	CAMPFIRE	BOTTOM	80
16	SUN SPOT	BOTTOM	88
17	MOON SPOT	BOTTOM	89
18	SPIDER SPOT	BOTTOM	90
19	GUITAR SPOT	BOTTOM	96

FLOOD LIGHTS

NO.	DESCRIPTION	DRAWER	L.D.#
B1	STAGE RIGHT BLUE	BOTTOM	66
G1	STAGE RIGHT GREEN	BOTTOM	67
A1	STAGE RIGHT AMBER	BOTTOM	68
R1	STAGE RIGHT RED	BOTTOM	69
B2	CENTER STAGE BLUE	BOTTOM	71
G2	N / A	BOTTOM	72
A2	CENTER STAGE AMBER	BOTTOM	73
R2	CENTER STAGE RED	BOTTOM	74
B3	STAGE LEFT BLUE	BOTTOM	76
G3	STAGE LEFT GREEN	BOTTOM	77
A3	STAGE LEFT AMBER	BOTTOM	78
R3	STAGE LEFT RED	BOTTOM	79

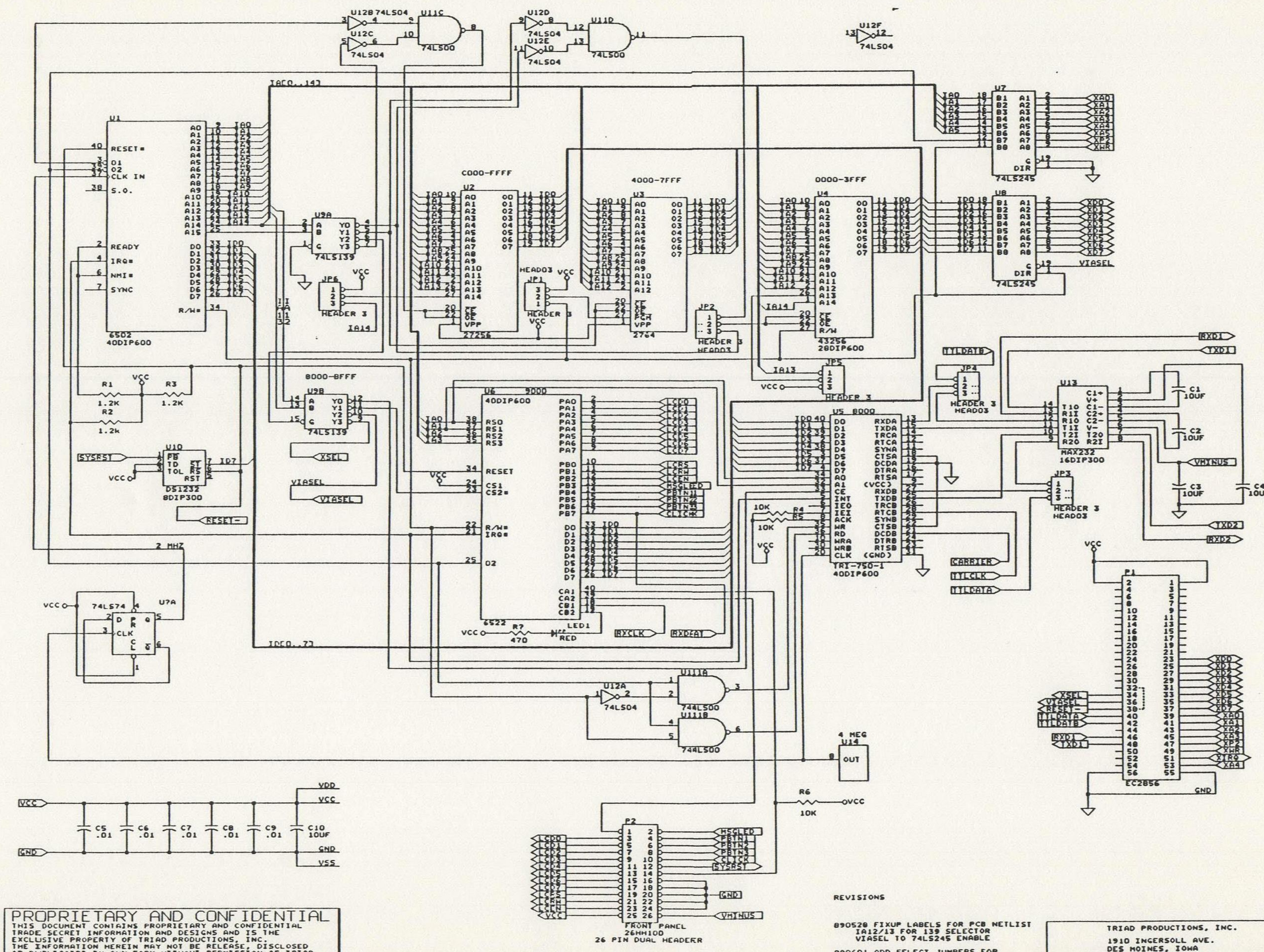
U1
6502
40DIP600
RESET*
O1
O2
CLK IN
S.O.
READY
IRQ*
NMI*
SYNC
R/W*
U2
C000-FFFF
27256
U3
4000-7FFF
2764
U4
0000-3FFF
43256
28DIP600
U5 8000
TRI-750-1
40DIP600
U6 9000
6522
40DIP600
U7
74LS245
U8
74LS245
U9A
74LS139
U9B
74LS139
8000-8FFF
U10
DS1232
8DIP300
U11A
U11B
U11C
U11D
74LS00
U12A
U12B
U12C
U12D
U12E
U12F
74LS04
U13
MAX232
16DIP300
U14
4 MEG
OUT
U7A
74LS74
2 MHZ
JP1
JP2
JP3
JP4
JP5
JP6
HEADER 3
HEAD03
R1 1.2K
R2 1.2k
R3 1.2K
R4 10K
R5 10K
R6 10K
R7 470
LED1 RED
C1 10UF
C2 10UF
C3 10UF
C4 10UF
C5 .01
C6 .01
C7 .01
C8 .01
C9 .01
C10 10UF
VCC
VDD
GND
VSS
VMINUS
SYSRST
RESET-
XSEL
VIASEL
RXCLK
RXDAT
RXD1
TXD1
TXD2
RXD2
TTLDATB
TTLDATA
TTLCLK
CARRIER
XA0
XA1
XA2
XA3
XA4
XA5
XA6
XA7
XWR
XIRQ
XD0
XD1
XD2
XD3
XD4
XD5
XD6
XD7
LCD0
LCD1
LCD2
LCD3
LCD4
LCD5
LCD6
LCD7
LCRS
LCRW
LCEN
MSGLED
PBTN1
PBTN2
PBTN3
CLICK
IA[0..14]
ID[0..7]
P1
EC2856
P2
26HM100
FRONT PANEL
26 PIN DUAL HEADER

PROPRIETARY AND CONFIDENTIAL
THIS DOCUMENT CONTAINS PROPRIETARY AND CONFIDENTIAL TRADE SECRET INFORMATION AND DESIGNS AND IS THE EXCLUSIVE PROPERTY OF TRIAD PRODUCTIONS, INC.
THE INFORMATION HEREIN MAY NOT BE RELEASE, DISCLOSED OR DUPLICATED IN ANY FORM WITHOUT PERMISSION OF TRIAD

REVISIONS

890528 FIXUP LABELS FOR PCB NETLIST
IA12/13 FOR 139 SELECTOR
VIASEL TO 74LS245 ENABLE

890601 ADD SELECT JUMPERS FOR
U2 AND U4 (64/256 SELECT)

TRIAD PRODUCTIONS, INC.

1910 INGERSOLL AVE.
DES MOINES, IOWA
515-243-2125

Title		
	SHOWBIZ CYBERSTAR PROCESSOR CARD	
Size C	Document Number TC750.0CD	REV C
Date:	June 29, 1989	Sheet 1 of 3

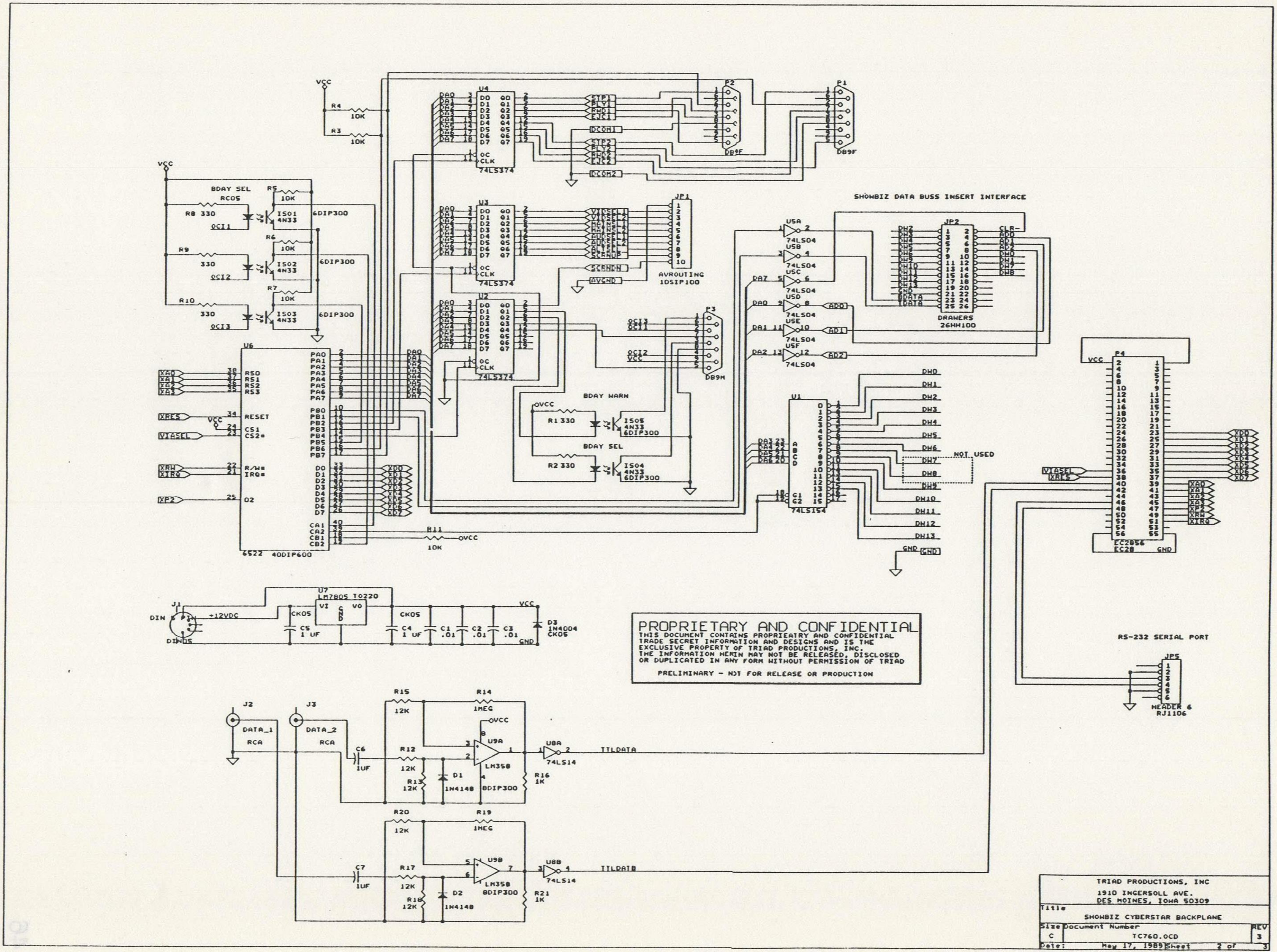
VCC
R4 10K
R3 10K
U4 74LS374
U3 74LS374
U2 74LS374
DA0 DA1 DA2 DA3 DA4 DA5 DA6 DA7
D0 D1 D2 D3 D4 D5 D6 D7
Q0 Q1 Q2 Q3 Q4 Q5 Q6 Q7
OC CLK
STP1 PLY1 RWD1 EJC1
DCOM1
STP2 PLY2 RWD2 EJC2
DCOM2
P2 DB9F
P1 DB9F
JP1 AVROUTING 10SIP100
SCRNDN
AVGND
P3 DB9M
OCI3 OCI1 OCI2 VCC
BDAY SEL
RC05
R5 10K
R6 10K
R7 10K
R8 330
R9 330
R10 330
OCI1 OCI2 OCI3
IS01 4N33 6DIP300
IS02 4N33 6DIP300
IS03 4N33 6DIP300
BDAY WARN
OVCC
R1 330
IS05 4N33 6DIP300
BDAY SEL
R2 330
IS04 4N33 6DIP300
U6 6522 40DIP600
XA0 XA1 XA2 XA3
RS0 RS1 RS2 RS3
XRES RESET
VIASEL CS1 CS2*
XRW R/W*
XIRQ IRQ*
XP2 O2
PA0 PA1 PA2 PA3 PA4 PA5 PA6 PA7
PB0 PB1 PB2 PB3 PB4 PB5 PB6 PB7
XD0 XD1 XD2 XD3 XD4 XD5 XD6 XD7
CA1 CA2 CB1 CB2
R11 10K OVCC
SHOWBIZ DATA BUSS INSERT INTERFACE
U5A U5B U5C U5D U5E U5F 74LS04
AD0 AD1 AD2
JP2 DRAWERS 26HW100
DH2 DH3 DH4 DH5 DH6 DH9 DH10 DH11 DH12 DH13 GND BDATA TDATA
CLR- AD0 AD1 AD2 DH0 DH1 DH7 DH8
U1 74LS154
DH0 DH1 DH2 DH3 DH4 DH5 DH6 DH7 DH8 DH9 DH10 DH11 DH12 DH13
NOT USED
GND
P4 EC2856 EC28
VCC GND
RS-232 SERIAL PORT
JP5 HEADER 6 RJ1106
J1 DIN DIN5
+12VDC
U7 LM7805 TO220
VI GND VO
CK05
C5 1 UF
C4 1 UF
C1 .01
C2 .01
C3 .01
D3 1N4004 CK05
J2 DATA_1 RCA
J3 DATA_2 RCA
C6 1UF
C7 1UF
R15 12K
R14 1MEG
R12 12K
R13 12K
D1 1N4148
U9A LM358 8DIP300
R16 1K
U8A 74LS14
TTLDATA
R20 12K
R19 1MEG
R17 12K
R18 12K
D2 1N4148
U9B LM358 8DIP300
R21 1K
U8B 74LS14
TTLDATB

PROPRIETARY AND CONFIDENTIAL
THIS DOCUMENT CONTAINS PROPRIEATRY AND CONFIDENTIAL
TRADE SECRET INFORMATION AND DESIGNS AND IS THE
EXCLUSIVE PROPERTY OF TRIAD PRODUCTIONS, INC.
THE INFORMATION HERIN MAY NOT BE RELEASED, DISCLOSED
OR DUPLICATED IN ANY FORM WITHOUT PERMISSION OF TRIAD

PRELIMINARY - NOT FOR RELEASE OR PRODUCTION

TRIAD PRODUCTIONS, INC
1910 INGERSOLL AVE.
DES MOINES, IOWA 50309

Title
SHOWBIZ CYBERSTAR BACKPLANE

Size C
Document Number TC760.0CD
REV 3
Date: May 17, 1989
Sheet 2 of 3

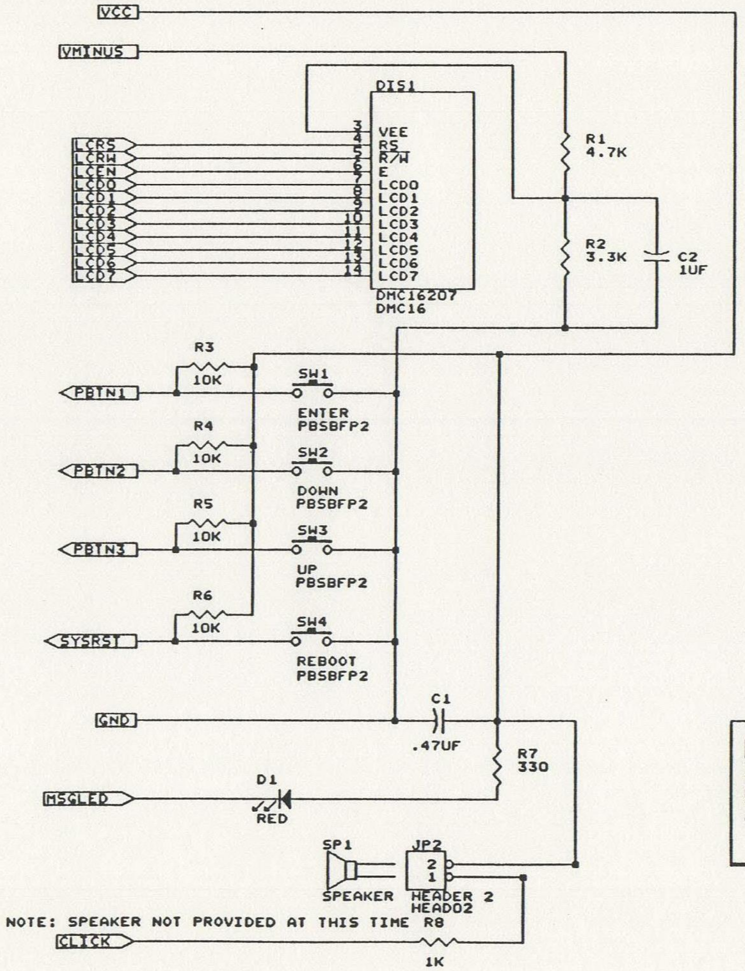
VCC
VMINUS
DIS1
VEE
RS
R/W
E
LCD0
LCD1
LCD2
LCD3
LCD4
LCD5
LCD6
LCD7
3
4
5
6
7
8
9
10
11
12
13
14
LCRS
LCRW
LCEN
LCD0
LCD1
LCD2
LCD3
LCD4
LCD5
LCD6
LCD7
DMC16207
DMC16
R1
4.7K
R2
3.3K
C2
1UF
R3
10K
PBTN1
SW1
ENTER
PBSBFP2
R4
10K
PBTN2
SW2
DOWN
PBSBFP2
R5
10K
PBTN3
SW3
UP
PBSBFP2
R6
10K
SYSRST
SW4
REBOOT
PBSBFP2
GND
C1
.47UF
R7
330
MSGLED
D1
RED
SP1
SPEAKER
JP2
2
1
HEADER 2
HEAD02
R8
CLICK
1K

NOTE: SPEAKER NOT PROVIDED AT THIS TIME

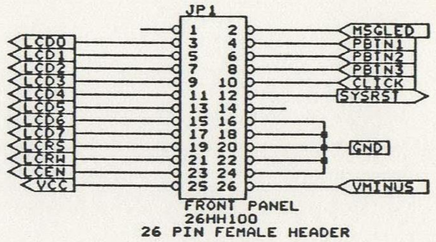
JP1
1
2
3
4
5
6
7
8
9
10
11
12
13
14
15
16
17
18
19
20
21
22
23
24
25
26
LCD0
LCD1
LCD2
LCD3
LCD4
LCD5
LCD6
LCD7
LCRS
LCRW
LCEN
VCC
MSGLED
PBTN1
PBTN2
PBTN3
CLICK
SYSRST
GND
VMINUS
FRONT PANEL
26HH100
26 PIN FEMALE HEADER

PROPRIETARY AND CONFIDENTIAL

THIS DOCUMENT CONTAINS PROPRIEATRY AND CONFIDENTIAL TRADE SECRET INFORMATION AND DESIGNS AND IS THE EXCLUSIVE PROPERTY OF TRIAD PRODUCTIONS, INC. THE INFORMATION HERIN MAY NOT BE RELEASED, DISCLOSED OR DUPLICATED IN ANY FORM WITHOUT PERMISSION OF TRIAD

PRELIMINARY - NOT FOR RELEASE OR PRODUCTION

REV D. ADDED PART VALUES, CHANGE D TO LED
REV. C - ADDED RESET BUTTON

TRIAD PRODUCTIONS, INC.
1910 INGERSOLL AVE.
DES MOINES, IOWA

Title
CYBERSTAR SHOW CONTROLLER FRONT PANEL

Size	Document Number	REV
B	TC770.0CD	D

Date: May 17, 1989 Sheet 3 of 4

SHOWBIZ CABLE ASSEMBLY

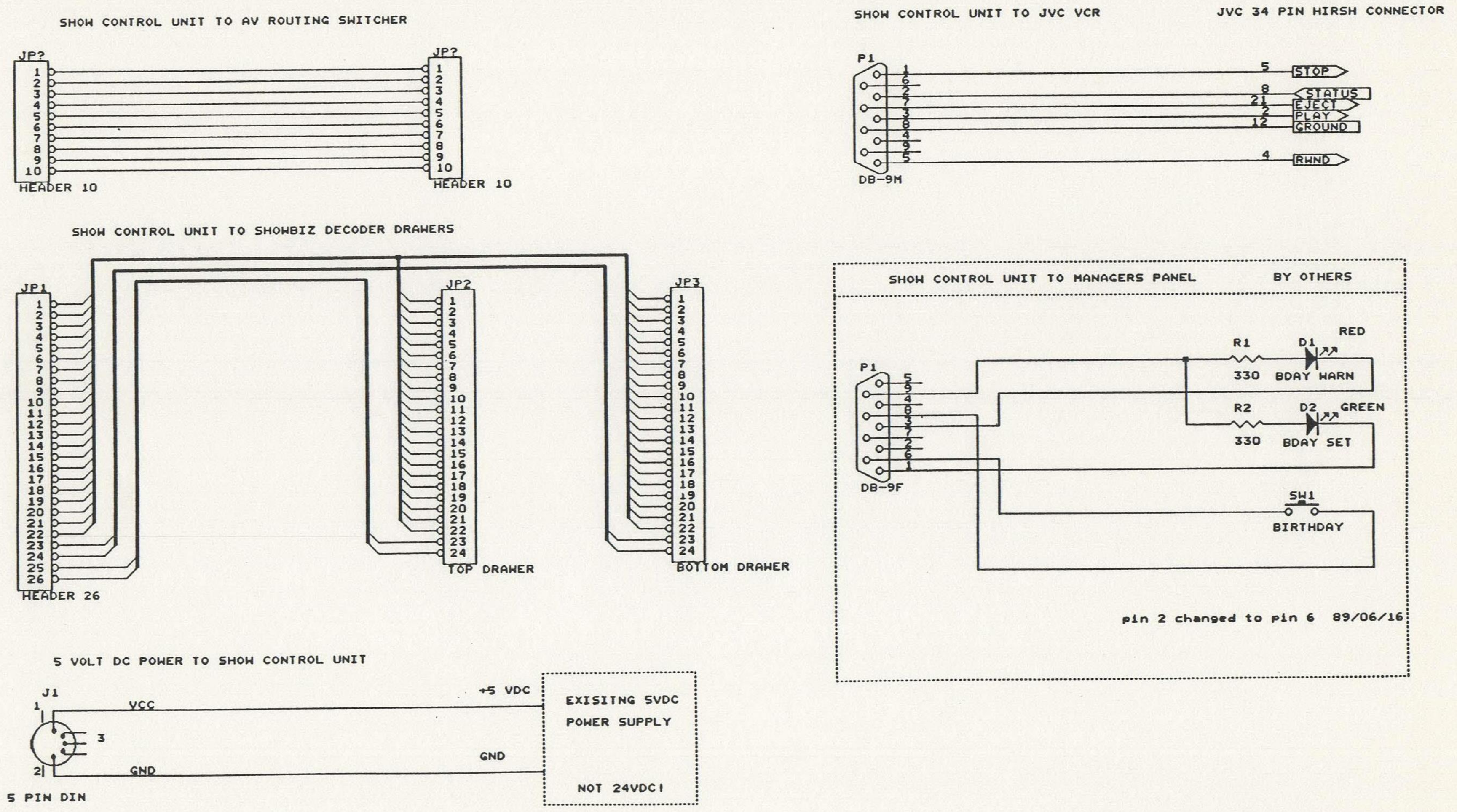
SHOW CONTROL UNIT TO AV ROUTING SWITCHER
JP?
1 2 3 4 5 6 7 8 9 10
HEADER 10
JP?
1 2 3 4 5 6 7 8 9 10
HEADER 10
SHOW CONTROL UNIT TO JVC VCR
JVC 34 PIN HIRSH CONNECTOR
P1
1 6 2 7 3 8 4 9 5
DB-9M
5 STOP
8 STATUS
21 EJECT
2 PLAY
12 GROUND
4 RWND
SHOW CONTROL UNIT TO SHOWBIZ DECODER DRAWERS
JP1
1–26
HEADER 26
JP2
1–24
TOP DRAWER
JP3
1–24
BOTTOM DRAWER
SHOW CONTROL UNIT TO MANAGERS PANEL
BY OTHERS
P1
5 9 4 8 3 7 2 6 1
DB-9F
R1
330
D1
RED
BDAY WARN
R2
330
D2
GREEN
BDAY SET
SW1
BIRTHDAY
pin 2 changed to pin 6 89/06/16
5 VOLT DC POWER TO SHOW CONTROL UNIT
J1
1
2
3
VCC
GND
5 PIN DIN
+5 VDC
GND
EXISITNG 5VDC
POWER SUPPLY
NOT 24VDC!

TRIAD PRODUCTIONS, INC.
1910 INGERSOLL AVE.
DES MOINES, IOWA 50309

Title CYBERSTAR INTERFACE CABLE DETAIL		
Size B	Document Number CSTARS.OCD	REV B
Date: June 16, 1989	Sheet 4 of 4	

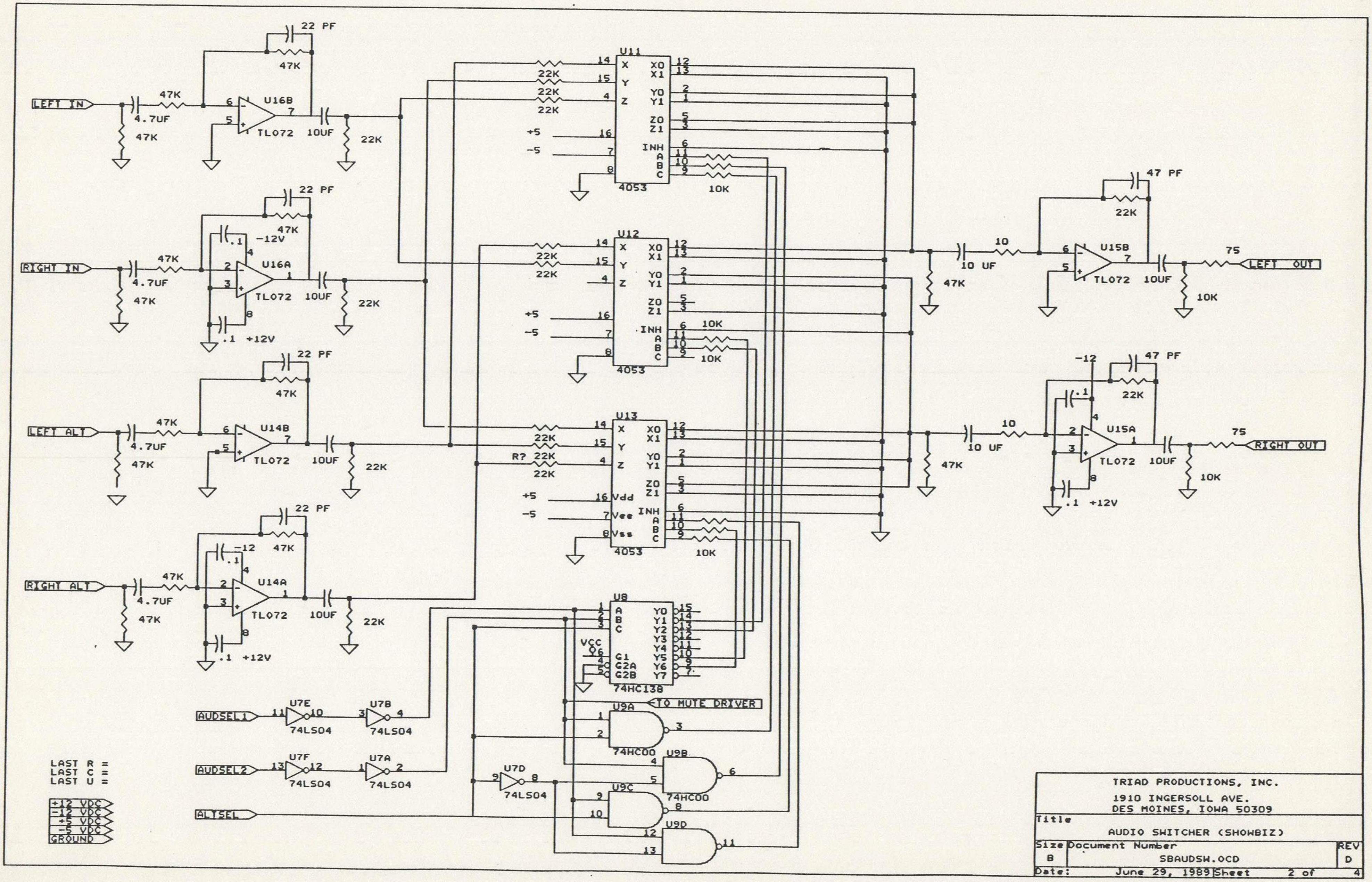
LEFT IN
4.7UF
47K
47K
U16B
TL072
22 PF
47K
10UF
22K
RIGHT IN
U16A
-12V
+12V
.1
LEFT ALT
U14B
RIGHT ALT
U14A
U11
U12
U13
4053
X
Y
Z
X0
X1
Y0
Y1
Z0
Z1
INH
A
B
C
+5
-5
Vdd
Vee
Vss
R?
10K
47 PF
22K
10 UF
10
U15B
U15A
75
LEFT OUT
RIGHT OUT
U8
74HC138
VCC
G1
G2A
G2B
Y0
Y1
Y2
Y3
Y4
Y5
Y6
Y7
TO MUTE DRIVER
U9A
U9B
U9C
U9D
74HC00
AUDSEL1
AUDSEL2
ALTSEL
U7E
U7B
U7F
U7A
U7D
74LS04
LAST R =
LAST C =
LAST U =
+12 VDC
-12 VDC
+5 VDC
-5 VDC
GROUND

TRIAD PRODUCTIONS, INC.
1910 INGERSOLL AVE.
DES MOINES, IOWA 50309

Title AUDIO SWITCHER (SHOWBIZ)		
Size B	Document Number SBAUDSW.OCD	REV D
Date: June 29, 1989	Sheet 2 of 4	

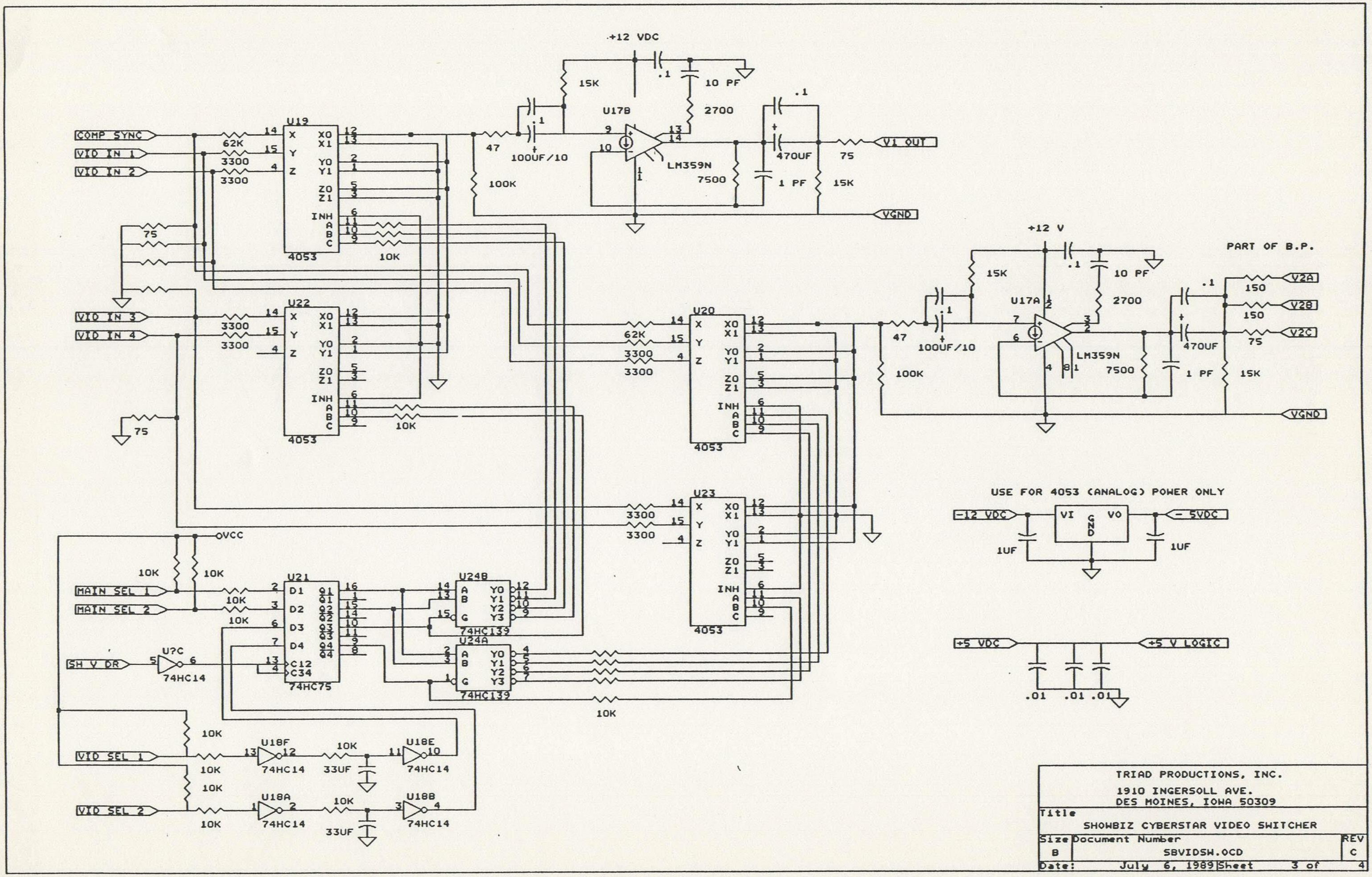
+12 VDC
.1
10 PF
15K
2700
U17B
.1
9
10
13
14
LM359N
7500
1 PF
470UF
15K
75
V1 OUT
VGND
47
100UF/10
100K
COMP SYNC
VID IN 1
VID IN 2
62K
3300
3300
U19
X
Y
Z
X0
X1
Y0
Y1
Z0
Z1
INH
A
B
C
4053
10K
75
VID IN 3
VID IN 4
U22
4053
75
U20
4053
U23
4053
+12 V
15K
U17A
.1
10 PF
2700
LM359N
7500
1 PF
470UF
15K
100K
PART OF B.P.
150
150
75
V2A
V2B
V2C
VGND
USE FOR 4053 (ANALOG) POWER ONLY
-12 VDC
VI
GND
VO
- 5VDC
1UF
1UF
+5 VDC
+5 V LOGIC
.01
.01
.01
VCC
10K
10K
MAIN SEL 1
MAIN SEL 2
10K
10K
U21
D1
D2
D3
D4
Q1
Q2
Q3
Q4
C12
C34
74HC75
U24B
74HC139
U24A
74HC139
SH V DR
U?C
74HC14
10K
VID SEL 1
VID SEL 2
U18F
74HC14
U18E
74HC14
U18A
74HC14
U18B
74HC14
33UF
33UF

TRIAD PRODUCTIONS, INC.
1910 INGERSOLL AVE.
DES MOINES, IOWA 50309

Title
SHOWBIZ CYBERSTAR VIDEO SWITCHER

Size	Document Number	REV
B	SBVIDSH.OCD	C

Date: July 6, 1989 Sheet 3 of 4

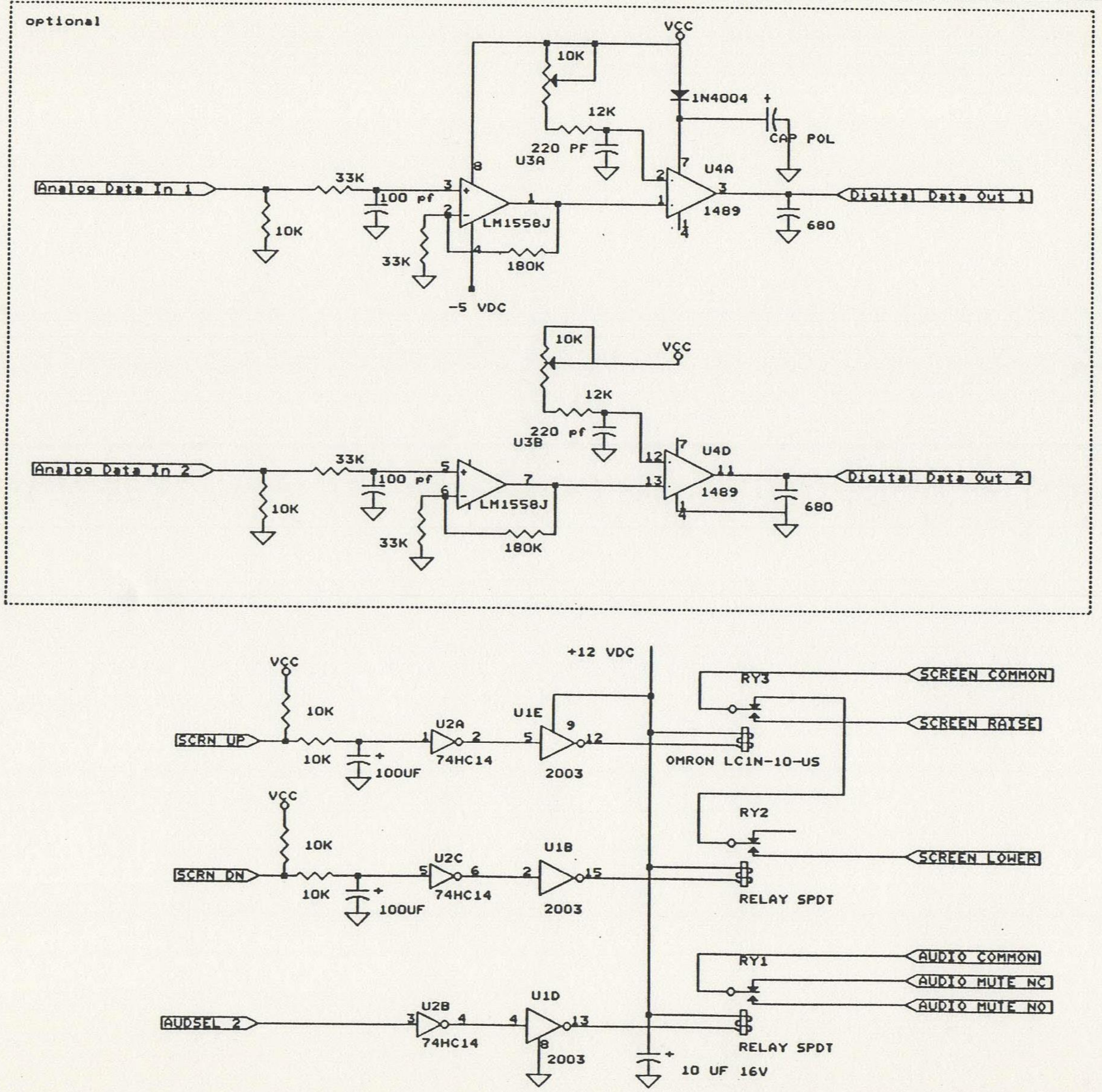
optional
VCC
10K
1N4004
+
12K
CAP POL
220 PF
U3A
8
U4A
7
2
Analog Data In 1
33K
100 pf
3
1
LM1558J
1489
3
Digital Data Out 1
10K
2
4
33K
180K
680
-5 VDC
10K
VCC
12K
220 pf
U3B
12
7
U4D
Analog Data In 2
33K
100 pf
5
7
13
11
Digital Data Out 2
6
LM1558J
1489
4
10K
33K
180K
680
+12 VDC
VCC
RY3
SCREEN COMMON
10K
U1E
SCREEN RAISE
U2A
9
SCRN UP
1
2
5
12
10K
+
74HC14
OMRON LC1N-10-US
100UF
2003
VCC
RY2
10K
U1B
U2C
SCREEN LOWER
SCRN DN
5
6
2
15
10K
+
74HC14
100UF
2003
RELAY SPDT
RY1
AUDIO COMMON
U1D
AUDIO MUTE NC
AUDIO MUTE NO
U2B
AUDSEL 2
3
4
4
13
74HC14
8
2003
RELAY SPDT
+
10 UF 16V

PROPRIETARY AND CONFIDENTIAL

Triad Productions, Inc.
1910 INGERSOLL AVE.
DES MOINES, IOWA 50309

Title	cybervision DATA SHAPER AND LOGIC	
Size B	Document Number SHOWBIz1.OCD	REV C
Date:	June 29, 1969	Sheet 1 of 4

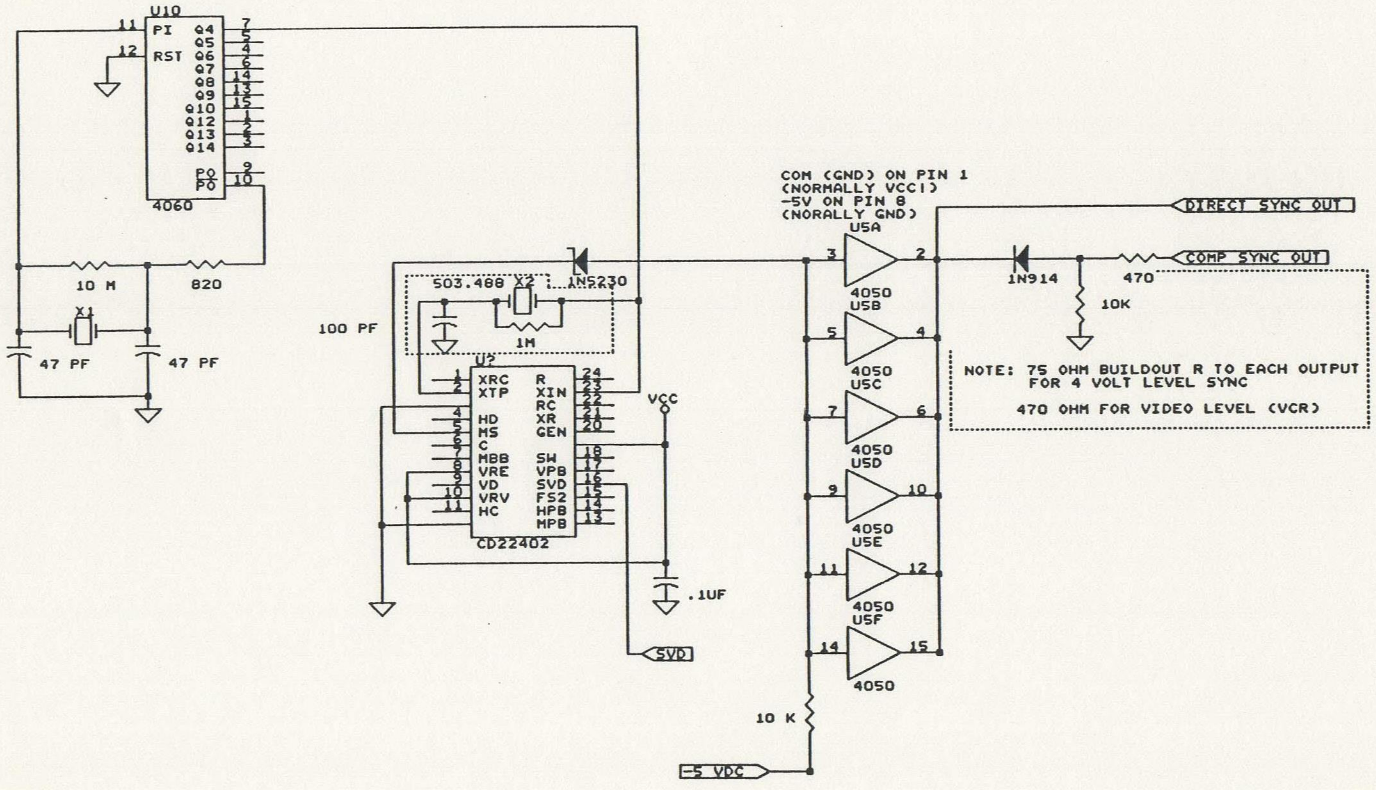
U10
11
PI
12
RST
Q4
Q5
Q6
Q7
Q8
Q9
Q10
Q12
Q13
Q14
PO
PO
7
5
4
6
14
13
15
1
2
3
9
10
4060
10 M
820
X1
47 PF
47 PF
503.488 X2
1N5230
1M
100 PF
U?
XRC
XTP
HD
MS
C
MBB
VRE
VD
VRV
HC
R
XIN
RC
XR
GEN
SW
VPB
SVD
FS2
HPB
MPB
24
23
22
21
20
18
17
16
15
14
13
CD22402
VCC
.1UF
SVD
U5A
U5B
U5C
U5D
U5E
U5F
4050
DIRECT SYNC OUT
COMP SYNC OUT
1N914
470
10K
10 K
-5 VDC

COM (GND) ON PIN 1
(NORMALLY VCC1)
-5V ON PIN 8
(NORALLY GND)

NOTE: 75 OHM BUILDOUT R TO EACH OUTPUT
FOR 4 VOLT LEVEL SYNC

470 OHM FOR VIDEO LEVEL (VCR)

PROPRIETARY AND CONFIDENTIAL

TRIAD PRODUCTIONS, INC.
1910 INGERSOLL AVE.
DES MOINES, IOWA 50309

Title
SYNC GENERATOR

Size B	Document Number SBSYNCG.OCD	REV C
Date:	June 29, 1989	Sheet of

CYBERSTAR TROUBLESHOOTING

SYMPTOM	CAUSE / ACTION
No sound	Check -5v. regulator in A/V box
Intermittent movements	Ribbon cable not plugged in tight in tunnel connections. Possible bad long driver card. Possible bad tape - try right normal VCR output.
System resets automatically and tape rewinds and starts over.	+5v. power supply problem
Video doesn't turn on until Birthday start or Show start. Audio noise at beginning of tape.	Part of tape has been erased. Replace tape.
No display on LCD and tape ejects when placed in VCR.	Ribbon Jumper cable from A/V Routing Switcher to Show Controller has one connector in upside down.

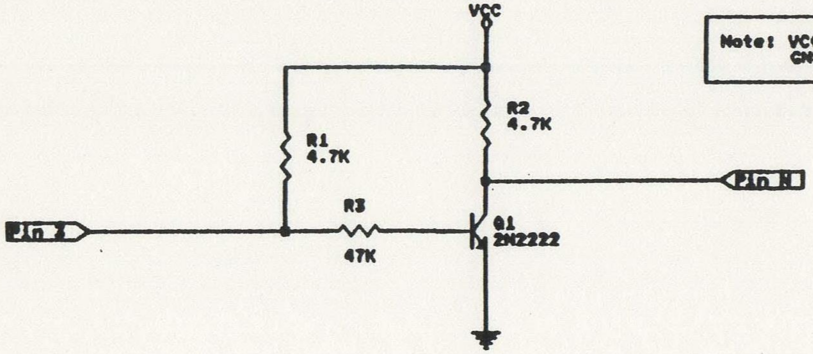
VCC
R1
4.7K
R2
4.7K
R3
47K
Q1
2N2222
Pin 3
Pin H

Note: VCC = Pin 1 on edge connector
GND = Pin 22 on edge connector

David Philipsen

Title
Cyberstar H/L adapter

Size A
Document Number 0717899
REV C
Date: August 10, 1989 Sheet 1 of 1

CYBERAMICS

CYBERAMICS

OBJECTIVE:

Upon completion of training, the Technical Manager will be able to:

	PREPARATION	COMPLETED
I. State and demonstrate the general operation of the Cyberamics main stage show.	Pages 2-001 - 2-002	________
II. State and demonstrate the use and purpose of a preventative maintenance program.	2-008 - 2-014	________
III. State and demonstrate the procedures for daily maintenance.	2-014 - 2-015	________
IV. State and demonstrate the procedures for weekly maintenance.	2-015 - 2-019	________
V. State and demonstrate the procedures for monthly maintenance.	2-020 -	________
VI. State and demonstrate the procedures for quarterly maintenance.	2-020 - 2-022	________
VII. State and demonstrate the operation of the transport control module (board/card).	2-023 - 2-026	________
VIII. State and demonstrate the operation of the audio control module (board/card).	2-027 - 2-030	________
IX. State and demonstrate the operation of the "CPU" module (board/card).	2-031 - 2-032	________
X. State and demonstrate the operation of the character driver board.	2-033 - 2-034	________
XI. State and demonstrate the operation of the light driver board and the house light dimmer.	2-035 - 2-037	________

Page 2
Objective/Cyberamics

		PREPARATION	COMPLETED
XII.	State and demonstrate the operation and testing of the control console.	2-038 - 2-043	______
XIII.	State and demonstrate the use of the Rosetta.	2-044 - 2-050	______
XIV.	State and demonstrate the operation and maintenance of the compressed air system.	2-051 - 2-061	______
XV.	State and demonstrate the operation and adjustment of the high and low pressure regulators.	2-062	______
XVI.	State and demonstrate the operation of the solenoid board.	2-062 - 2-063	______
XVII.	State and demonstrate the operation of the four-way valve and its interaction with the cylinder.	2-062	______

____
Regional Technical Trainer

Date: ____________

____
Technical Manager

Date: ____________

CYBERAMICS SYSTEM DESCRIPTION

The Cyberamics System uses a combination of two well-perfected and reliable technologies, pneumatics and electronic microprocessor data control. With these two technologies, the system is easy to operate and will give trouble free service with routine maintenance.

STANDARD OPERATING PROCEDURES

COMPRESSED AIR SYSTEM

Power for the movement of the Cyberamics Characters is supplied by compressed air. Compressed air provides a clean and efficient means of powering the character mechanisms.

A. Air Compressor, Refrigerant Dryer, Main Filter/Regulator Board

Compressed air for the system is supplied by a two-stage air compressor which is automatically regulated to 125 psi to keep pressure above 60 psi at the regulator board. A refrigerant dryer condenses moisture out of the main air line so that it will not travel through the lines and contaminate the solenoids or cylinders. In addition to this dryer, the main filter/regulator board includes two coarse filters and one oil removal filter to keep the air system clean. The regulator on this board is to maintain 60 psi at the Character High/Low Regulators.

B. Character High/Low Air Pressure Regulators and Filter

Each of the characters has two air pressure regulators. One of these regulators sets the high pressure (27 psi) necessary for moving the heavier parts of the characters and for moving parts which must respond quickly. The other regulator sets the low pressure (8 psi) needed to close the eye lids.

AUTOMATIC OPERATION

1. Turn on the air compressor at the main breaker. Wait for the air pressure at the compressor to reach 125 psi, or the 5 horse compressor 150 psi, (the air compressor normally remains turned on and maintains 100 - 125 psi air pressure automatically. It should be turned off at the main breaker at night).

2. Check the air pressure at the main filter/regulator board. Adjust the regulator so that the air pressure gauge reads 60 psi. Tighten the lock nut on the T-handle after adjustment.

3. Load the skit tape onto the tape deck supply reel table. Secure the reel to the reel table by unscrewing the reel table spindle, turning the fins on the spindle to press the hub of the reel against the reel table, and re-tightening the spindle.

4. Thread the tape onto the take-up reel.

5. Set the output level controls on the tape deck right "VU" meter to 8" on 2340 and to (-) 3 db on X7 TEAC. Placing the output knob of the X-7 to calibrate should accomplish the same thing.

Automatic Operation Cont.

6. Turn on the Cyberamics Control center power by flipping on the sub-panel circuit breaker. All the Control Center AC switches normally remain switched on. When the Center power has turned on, the control panel button lights will flash momentarily.

If the tape rewinds off the take-up reel:

7. Turn off the ac switch at the control panel. Re-thread the tape and set the counter to "000" at the end of leader (beginning of brown tape). Turn the power back on and hold down the RESET button. Push fast forward (   ) and keep holding the RESET button until the tape counter reaches "050". Release the RESET button and the tape will position itself to the start of the first regular skit.

8. Press the "PROGRAM" button. The first regular skit will play in six minutes or as soon as the "NEXT" button is pressed.

9. The Cyberamics System will now operate automatically. After playing a regular skit, it will pause six minutes and then play a new skit. During the pauses, the background music and order microphone will be operational in the theatre area.

CYBERAMICS CONTROL CENTER

The brains of the Cyberamics System is the Cyberamics Control Center. The rack mounted Control Center governs all animation and sound in the Theatre. Included in the Control Center are the following components:

A. Tape Deck

The tape deck is a commercial two (2) track machine that plays back skit music and voices as well as command signals for all character movements, spotlight control, flags, pots and pans, drums, clappers, and razzle.

B. Card Cage

Immediately below the tape deck is the card cage, which contains printed circuit boards for the Center's data control system. These circuit boards slide out of their cage slots for trouble-shooting, or replacement. The printed circuit boards in the bird cage starting from the left are:

1. Transport Control - The transport control board changes the control signals from the tape deck into digital form for the microprocessor. It also controls the motion of the tape deck reels.

Cyberamics Control Center Cont.

2. Audio Control Board - The audio control board measures the ambient noise level from a microphone stationed in the theatre area. This measurement is forwarded to the microprocessor which adjusts skit volume to the appropriate level. A master control for skit volume is also included on this board.

3. Microprocessor Board - The microprocessor board controls the entire Cyberamics System. It monitors the function of many elements in the system, including switches, time, character control lines, etc. It also makes decisions and issues commands for the proper functioning of the system, based upon the program in its memory.

4. Character Driver Boards - There are six (6) character driver boards, one for the following characters; Chuck E. Cheese, Birds, Mr. Munch, Jasper, Guest, Pasqually, Drums, and also two (2) light driver boards, one for the front light bar and one for the back light bars. All the character driver boards are identical, except for an exchangeable "personality plug" (header). This "personality plug" routes to the board's circuitry only those commands which are intended for its character. The commands are changed by the character driver boards into voltages strong enough to activate the air control solenoids. In addition to its control function, each character driver board includes a volume control which sets the sound level of the speakers at the selected character audio jack located on the character solenoid board. Later boards do not have these adjustments because that type of speaker system is no longer used.

C. Control Panel Module

The chassis below the card cage contains the system's power supplies and a control panel. There are (9) pushbutton function switches on the panel as well as a rotary switch which serves as an automatic volume offset control. This control increases or decreases the skit volume in small increments. Its setting is monitored by the system microprocessor.

D. Background Music Cartridge Player

A typical installation will include a cassette player of the "continuous loop type" for background music played between skits. Output from the cassette player is fed into the card cage rack through (J15) and then out again from (J16) to a background music amplifier. The Audio Board can adjust the audio levels of the background music in the game room and show room separately.

E. Amplifier

At the bottom of the Center Control Cabinet is the background music amplifier. The amplifier strengthens the audio signals from the background music source and order desk microphone(s).

A	1518	PRODUCTION RELEASE	11/1/81	

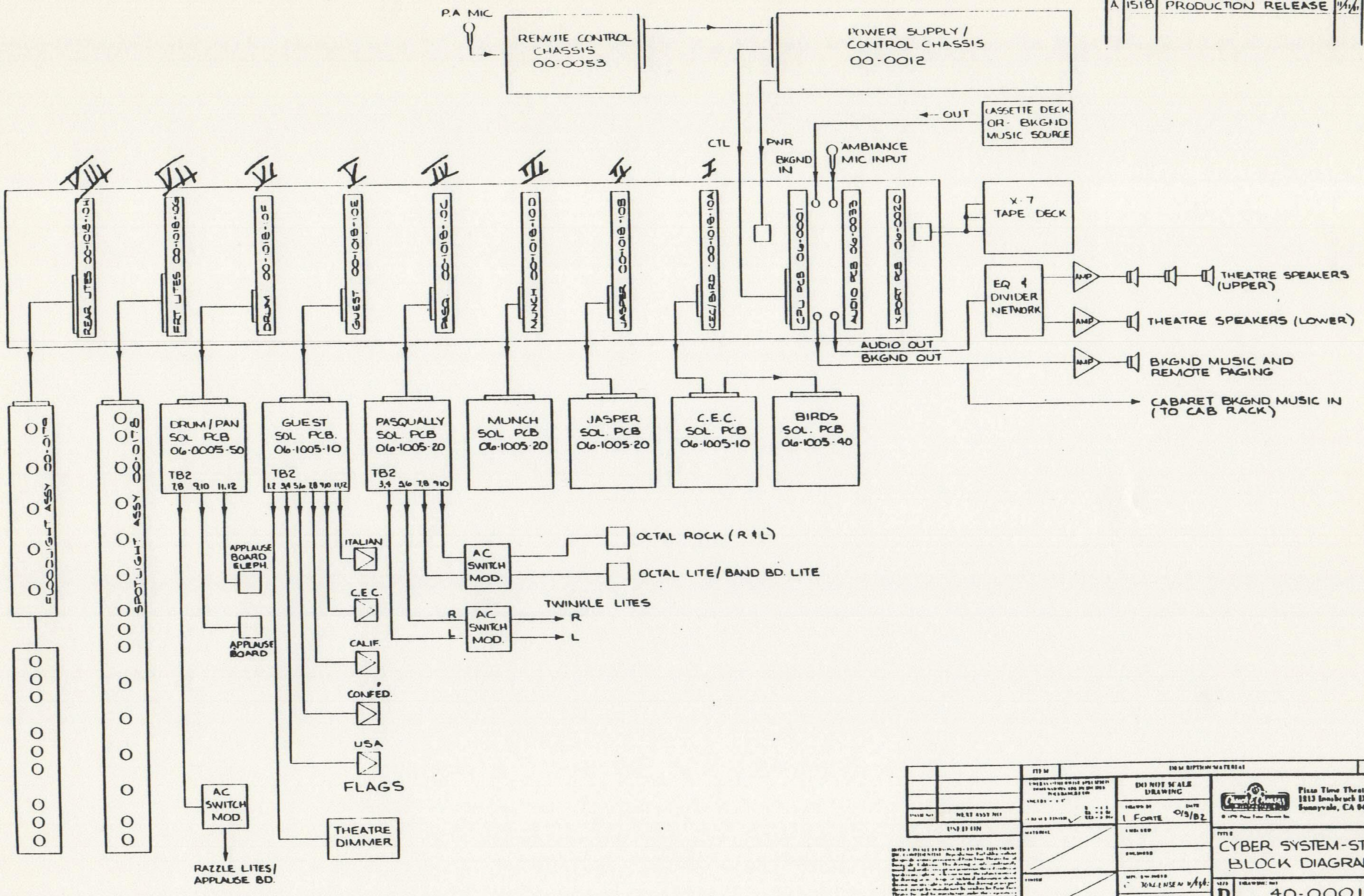
P.A MIC
REMOTE CONTROL CHASSIS 00-0053
POWER SUPPLY / CONTROL CHASSIS 00-0012
CTL
PWR
BKGND IN
AMBIANCE MIC INPUT
OUT
CASSETTE DECK OR BKGND MUSIC SOURCE
VIII
VII
VI
V
IV
III
II
I
REAR LITES 00-1018-0H
FRT LITES 00-1018-0G
DRUM 00-1018-0F
GUEST 00-1018-0E
PASQ. 00-1018-0C
MUNCH 00-1018-0D
JASPER 00-1018-0B
CEC/BIRD 00-1018-10A
CPU PCB 06-0001
AUDIO PCB 06-0033
XPORT PCB 06-0020
X-7 TAPE DECK
EQ & DIVIDER NETWORK
AMP
THEATRE SPEAKERS (UPPER)
THEATRE SPEAKERS (LOWER)
AUDIO OUT
BKGND OUT
BKGND MUSIC AND REMOTE PAGING
CABARET BKGND MUSIC IN (TO CAB RACK)
FLOODLIGHT ASSY 00-0179
SPOTLIGHT ASSY 00-0178
DRUM / PAN SOL PCB 06-0005-50
GUEST SOL PCB. 06-1005-10
PASQUALLY SOL PCB 06-1005-20
MUNCH SOL PCB 06-1005-20
JASPER SOL PCB 06-1005-20
C.E.C. SOL. PCB 06-1005-10
BIRDS SOL. PCB 06-1005-40
TB2
7,8 9,10 11,12
1,2 3,4 5,6 7,8 9,10 11,12
3,4 5,6 7,8 9,10
APPLAUSE BOARD ELEPH.
APPLAUSE BOARD
ITALIAN
C.E.C.
CALIF.
CONFED.
USA
FLAGS
AC SWITCH MOD.
RAZZLE LITES/ APPLAUSE BD.
THEATRE DIMMER
OCTAL ROCK (R & L)
OCTAL LITE/ BAND BD. LITE
TWINKLE LITES
R
L

USED ON

DO NOT SCALE DRAWING

I FORTE 0/9/82

JORGENSEN 11/1/81

Pizza Time Theatre Inc.
1213 Innsbruck Dr.
Sunnyvale, CA 94086

CYBER SYSTEM-STAGE
BLOCK DIAGRAM

D 40-0001 A

NONE 1 1

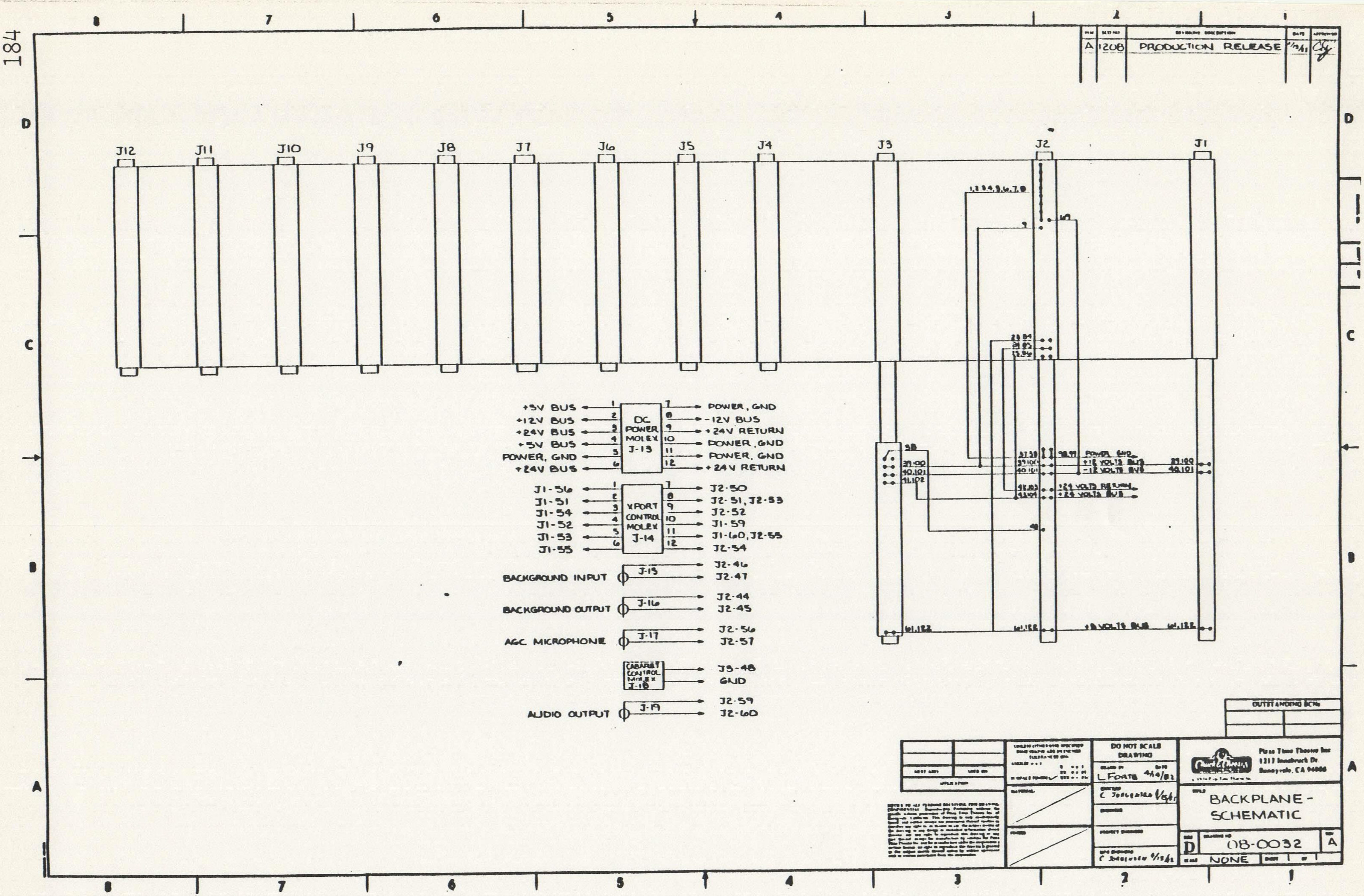
A
1208
PRODUCTION RELEASE
J12
J11
J10
J9
J8
J7
J6
J5
J4
J3
J2
J1
1,2,3,4,5,6,7,8
9
10
23 84
24 85
25 86
38
37,38
39,100
40,101
41,102
38,99
POWER GND
+12 VOLTS BUS
-12 VOLTS BUS
39,100
40,101
42,103
43,104
+24 VOLTS RETURN
+24 VOLTS BUS
48
61,122
61,122
+5 VOLTS BUS
61,122
+5V BUS
+12V BUS
+24V BUS
+5V BUS
POWER, GND
+24V BUS
1
2
3
4
5
6
DC
POWER
MOLEX
J-13
7
8
9
10
11
12
POWER, GND
-12V BUS
+24V RETURN
POWER, GND
POWER, GND
+24V RETURN
J1-56
J1-51
J1-54
J1-52
J1-53
J1-55
XPORT
CONTROL
MOLEX
J-14
J2-50
J2-51, J2-53
J2-52
J1-59
J1-60, J2-55
J2-54
BACKGROUND INPUT
J-15
J2-46
J2-47
BACKGROUND OUTPUT
J-16
J2-44
J2-45
AGC MICROPHONE
J-17
J2-56
J2-57
CABARET
CONTROL
MOLEX
J-18
J3-48
GND
AUDIO OUTPUT
J-19
J2-59
J2-60
OUTSTANDING ECNs
DO NOT SCALE
DRAWING
L FORTE 4/14/82
C JORGENSEN
C JORGENSEN
Pizza Time Theatre Inc
1213 Innsbruck Dr.
Sunnyvale, CA 94086
BACKPLANE -
SCHEMATIC
D
08-0032
A
NONE
8
7
6
5
4
3
2
1
D
C
B
A

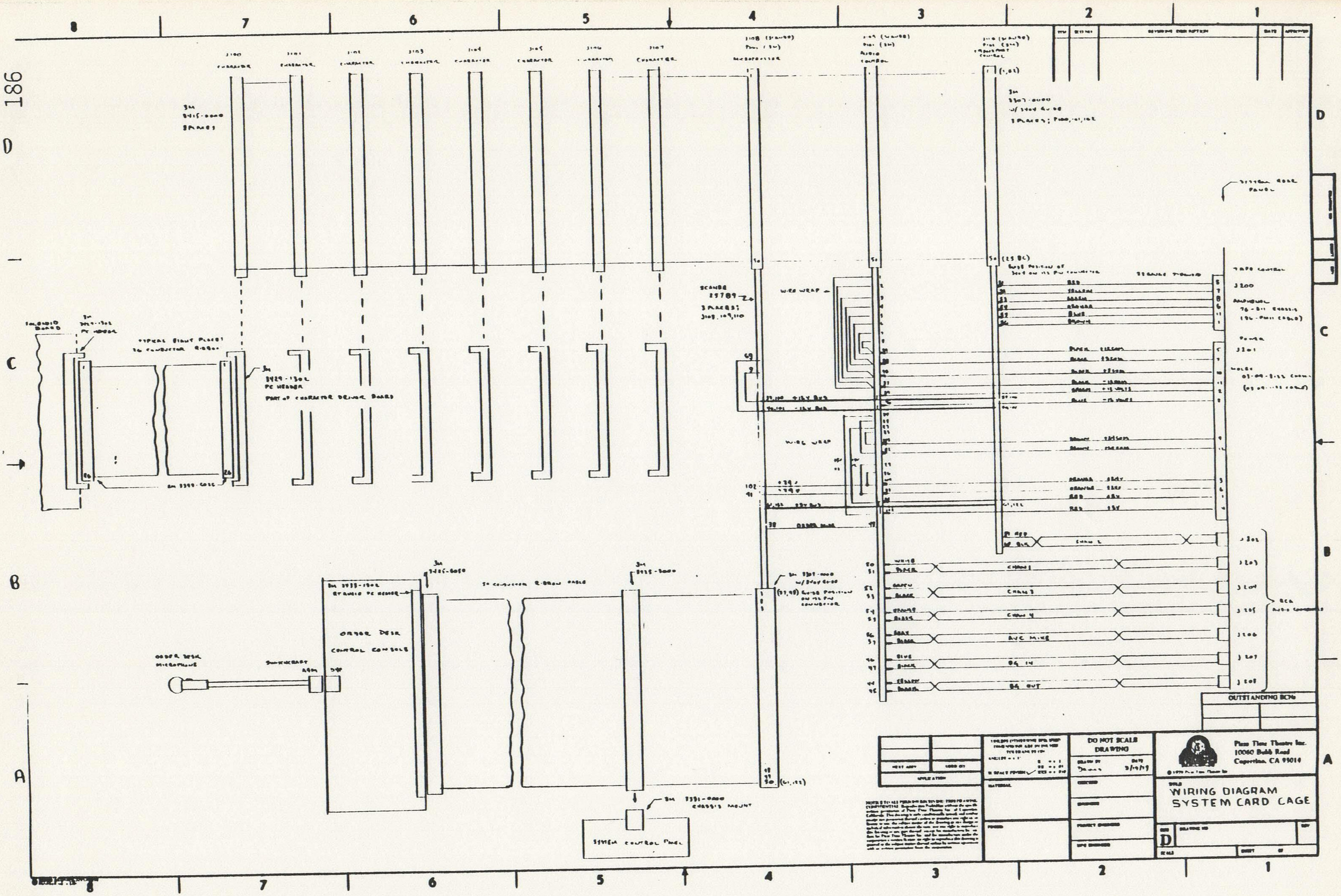
8
7
6
5
4
3
2
1
D
C
B
A
J100 CHARACTER
J101 CHARACTER
J102 CHARACTER
J103 CHARACTER
J104 CHARACTER
J105 CHARACTER
J106 CHARACTER
J107 CHARACTER
J108 (SCANBE) P101 (3M) MICROPROCESSOR
J109 (SCANBE) P101 (3M) AUDIO CONTROL
J110 (SCANBE) P102 (3M) TRANSPORT CONTROL
3M 3415-0000 8 PLACES
3M 3307-0000 w/ STOP GUIDE 3 PLACES; P100, 101, 102
(1, 51)
50 (25 DC)
GUIDE POSITION OF 3M ON ITS PIN CONNECTOR
SYSTEM REAR PANEL
SCANBE 25789-20 3 PLACES; J108, 109, 110
WIRE WRAP
TAPE CONTROL
J200
AMPHENOL 76-BIT CHASSIS 196-PIN CABLE
RED
YELLOW
BROWN
ORANGE
BLUE
BROWN
POWER
J201
MOLEX 03-09-2133 CHASSIS (03-09-1133 CABLE)
+15V BUS
-15V BUS
ORANGE
ORANGE
RED +5V
RED +5V
ORDER MIKE
CHAN 2
J202
WHITE
PINK
CHAN 1
J203
GREEN
BLACK
CHAN 3
J204
ORANGE
BLACK
CHAN 4
J205
GRAY
BLACK
AVC MIKE
J206
BLUE
BLACK
BG IN
J207
YELLOW
BLACK
BG OUT
J208
RCA AUDIO CONNECTORS
3M 3429-1302 PC HEADER
SOLENOID BOARD
TYPICAL EIGHT PLACES 26 CONDUCTOR RIBBON
3M 3429-1302 PC HEADER PART OF CHARACTER DRIVER BOARD
3M 3399-6026
26
3M 3433-1302 RT ANGLE PC HEADER
3M 3425-6050
50 CONDUCTOR RIBBON CABLE
3M 3415-3000
3M 3307-0000 w/ STOP GUIDE
(51, 98) GUIDE POSITION ON ITS PIN CONNECTOR
ORDER DESK CONTROL CONSOLE
ORDER DESK MICROPHONE
SWITCHCRAFT A4M D3F
3M 3331-0000 CHASSIS MOUNT
SYSTEM CONTROL PANEL
(51, 102)
OUTSTANDING ECNs
APPLICATION
DO NOT SCALE DRAWING
DRAWN BY
DATE 3/19/79
CHECKED
ENGINEER
PROJECT ENGINEER
MATERIAL
FINISH
SIZE D
DRAWING NO
REV
SCALE
SHEET OF

Pizza Time Theatre Inc.
10060 Bubb Road
Cupertino, CA 95014

© 1979 Pizza Time Theatre Inc.

WIRING DIAGRAM
SYSTEM CARD CAGE

INTRODUCTION TO PREVENTATIVE MAINTENANCE

The general purpose of preventative maintenance is to not only prevent and minimize repairs, but to maintain an item in as new and original condition as possible. A definite result of both the process and the products of preventative maintenance is a much better efficiency in the Technical Manager's work and usage of time. The efficiency (or productivity) improvement is seen for basically three reasons. First, the organization and planning that is a part of implementing a PM program instead of working in only a "reactive" or "crisis" repairing context. Second, an improvement in actual physical action by performing more work per disassembly or set-up instead of disassembly time to fix only one specific item. Third, by the realization of fewer repair situations that is a result of preventative maintenance.

An important clarification is that instituting a PM program is not an addition of new responsbilities and work for the Technical Manger. It is a formalized structure for performing the routine work that a Technical Manager is already doing. Preventative maintenance without the structure is cleaning a screen here, adjusting a coin mech there, cleaning a bad connection on this, or adjusting a control on that. Although some aspects may be new for some people most all Technical Managers are already performing preventative maintenance whether its organized or not.

The PM program, as with any organizational change, may take a little time to settle down. And the PM program may very well not show immediate effects when it is first implemented. However, it will definitely yield good results for the store and the Technical Manager after a transition time of a few weeks to a couple of months.

PM PROGRAM EXCEPTION OR MODIFICATION

Exceptions or modifications of the PM program at a particular store may be made if deemed appropriate by the Technical Manager responsible for that unit. The reason for any exceptions would be to individually adapt the PM program to be more appropriate for a specific stores situation and equipment. Program exceptions will not be done to customize the program to the store staff (Technical Manager, Managers, or an Assistant Technician) or their situation. Situational changes in the store staff will be viewed as temporary (vacation, sickness, no technician, etc.). These situations will call for appropriate involvement of the General Manager to assert and/or arrange for the programs continuation or updating (making up for) for lost program accomplishments. Preventative maintenance loses its value if it is done in an erratic manner.

EXECUTION AND RESPONSIBILITY OF STORE PM PROGRAM

It is ultimately the responsibility of the General Manager of a store to assure that the PM program for their store is performed both in action and in paperwork. The General Managers implementation of this would be through the Technical Manager for their store. The General Manager will further delegate the task of accomplishing the PM program by supporting the Technical Manager with assistance by a trained Assistant Technician or Game Room Attendant. Indeed, this would be absolutely necessary in situations where a Technical Manager is working operational shifts.

However the program is implemented, individuals involved in physically performing preventative maintenance should be trained by the Technical Manager who is responsible for that store. Furthermore, the Technical Manager will oversee, follow-up, and be responsible for and specifically aware of, all preventative maintenance performed regardless of who performs it. The usage of assistance for a Technical Manager will only work if the General Manager's involvement and authority are supporting the Technical Manager.

In rendering preventative maintenance assistance to the Technical Manager the number of individuals involved should be as many as deemed necessary. The reason for this is obviously for organization and accountability as well as efficiency in training and productivity. The precedence in selection of such individuals should be first for their "People Personality" and second for their manual dexterity or technical proclivity. The primary concerns of selecting these individuals are: reliability, ability to work independently (and productively), follow directions consistently, and work conscientiously. This is an important and reoccuring issue because a moments carelessness can result in a situation which can take quite a bit of time for a Technical Manager to remedy, and thus invalidating the concept of preventative maintenance and assistance.

The execution of the PM program is up to the General Manager and Technical Manager within certain areas. The specific categories will follow after addressing some of the general areas first.

Most of the PM program is organized specifying the following:

1) What items and action on any particular piece of equipment (games, cybers, etc.) should be done.

2) What time frame and quantity is to be accomplished for the different types of equipment.

What does need to be organized and managed at the store level is what rotational pattern will be followed and what the daily and/or weekly work routine will be.

Execution and Responsiblity of Store PM Program Cont.

In implementing the PM program for games the first consideration would be what the rotational pattern will be. This should be not only discussed and organized, but it should also be written down or sketched out. The order could be anything so long as it remains the same and all games are PM'ed before returning to the beginning. One of the simplest patterns would be to sketch the game room layout and draw lines to show the order. Another consideratoin would be to balance the weekly work load, as possible, because some games take longer to PM than others. In example, PM'ing each week one skee-ball, one kiddie ride/arcade, and five videos instead of doing three weeks of all videos and then a week of skee-balls. However, in contrast one might want to balance it overall with the exception of a couple of light load weeks where special projects or the period PM requirements could be done.

A final note in regards to games is the separation of functional and aesthetic categories. The functional category relates to preventing game failure and minimizing repairs, and involves more time (per game) in PM work. The benefits of functional PM work relate more to the Technical Manager and they interact more with the functional aspect of the game. A guest does not interact with the electronics and inner workings of a game, but mostly with just the end result and a game player has no awareness or concern with whether or not the inside of a game is perfect and clean, or if its been "jury-rigged" and has three inches of dust. (It is not all cut-and-dry and there is definitely an overlap between the functional and aesthetic areas.) The aesthetic category relates to keeping the game, particularly videos, in as new a condition as possible. Attention in this area is primarily focused on the video monitors in so far as being kept clean and adjusted. A game players eyes and attention are centered on the video screen and this is why someone plays and pays for an arcade video. If an individual was satisfied with simple, poor quality graphics they would stay at home with a convenient and inexpensive home computer-game system. Hence, the aesthetic PM deals more with the area of customer interaction and the need to maintain clean, clear high-resolution graphics. Time involvement, per game, is much less in cleaning and adjusting monitors than in the functional category.

In executing these two different program categories twice as many aesthetic game PM's are done as functional game PM's. These two categories could be executed completely separately if desired, but the most efficient approach would be to perform the aesthetic PM of a game at the same time as performing the functional PM of a game, and then doing the additional aesthetic PM's that are required on other games. More on Game Maintenance can be found on Pages 301-392 of this manual.

Preventative maintenance of the Cyberamic system is divided into three areas; general, stage, and lounge and cabaret. In the general category are the areas of the control rack PM, the inventory of spare

Execution and Responsibility of
Store PM Program Cont.

system parts and tapes, the system noise tests, and the process of ordering Cyberamic parts. The spare system parts and tapes inventory requirements serves a two-fold purpose; first, to easily monitor a store's ability to deal with Cyberamic control system contingencies; second, to create the necessity of organization and awareness in the store of these parts and assure their presence. This weekly inventory should literally take less than three minutes, if physically organized, and must not be done from recollection. The only other area of the general category that will be addressed here is the system noise test. It would behoove the General Manager to occasionally perform or participate in the Cyberamic system noise test to develop their awareness of both the present condition of their animation and to understand the animation in general.

The only particular points in executing the PM program in the Cybermic-Stage category is that there is a specific fixed rotational order in terms of which stage assembly will be worked on (although it does not matter where one initially starts). In addition, one assembly of the stage should be done each work day.

Preventative maintenance of the General (compressor and misc.) category calls for attention on one particular item in its execution - consistency. The PM program in the General (compressor and misc.) category is based on a period (four weeks) cycle in completion of the PM work and form. Within a period it does not matter what sequence or when a particular item is done as long as it is consistently done around the same time. In example, and with particular emphasis, is the air compressor(s). The air compressor should be PM'ed the same week of a period from one period to the next. It should not be PM'ed the first week of one period and the last week of the next, hence the air compressor goes seven or eight weeks without preventative maintenance. The other items in this category are not as critical but should still be dealt with in a consistent manner.

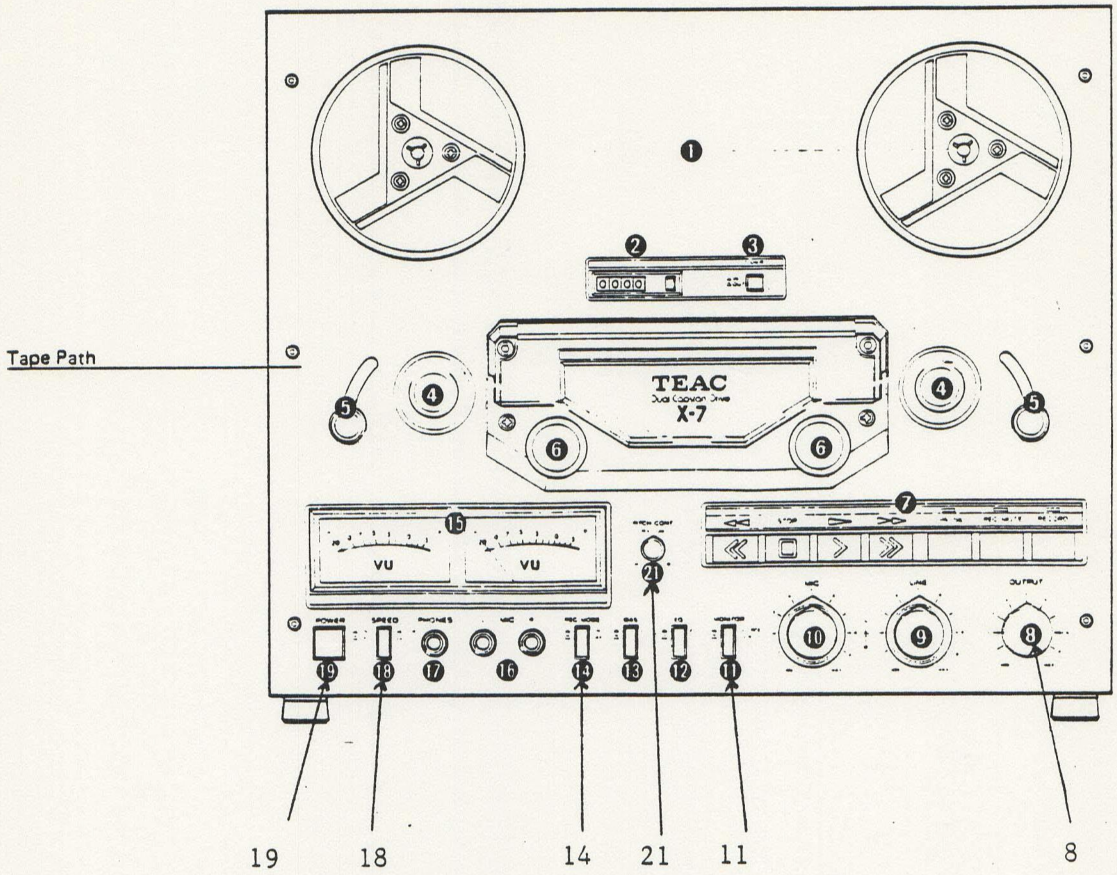
1
2
3
Tape Path
4
5
TEAC
Dual Capstan Drive
X-7
4
5
6
6
7
15
VU
VU
21
10
9
8
19
18
17
16
14
13
12
11
19
18
14
21
11
8

19. Push "ON"
18. Speed push "LOW"
14. Rec to "OFF"
21. Pitch push to "OFF"
11. Monitor to "TAPE"
8. Output to 3 DB on VU meter

X-7 and X7 MARK II TAPE DECK

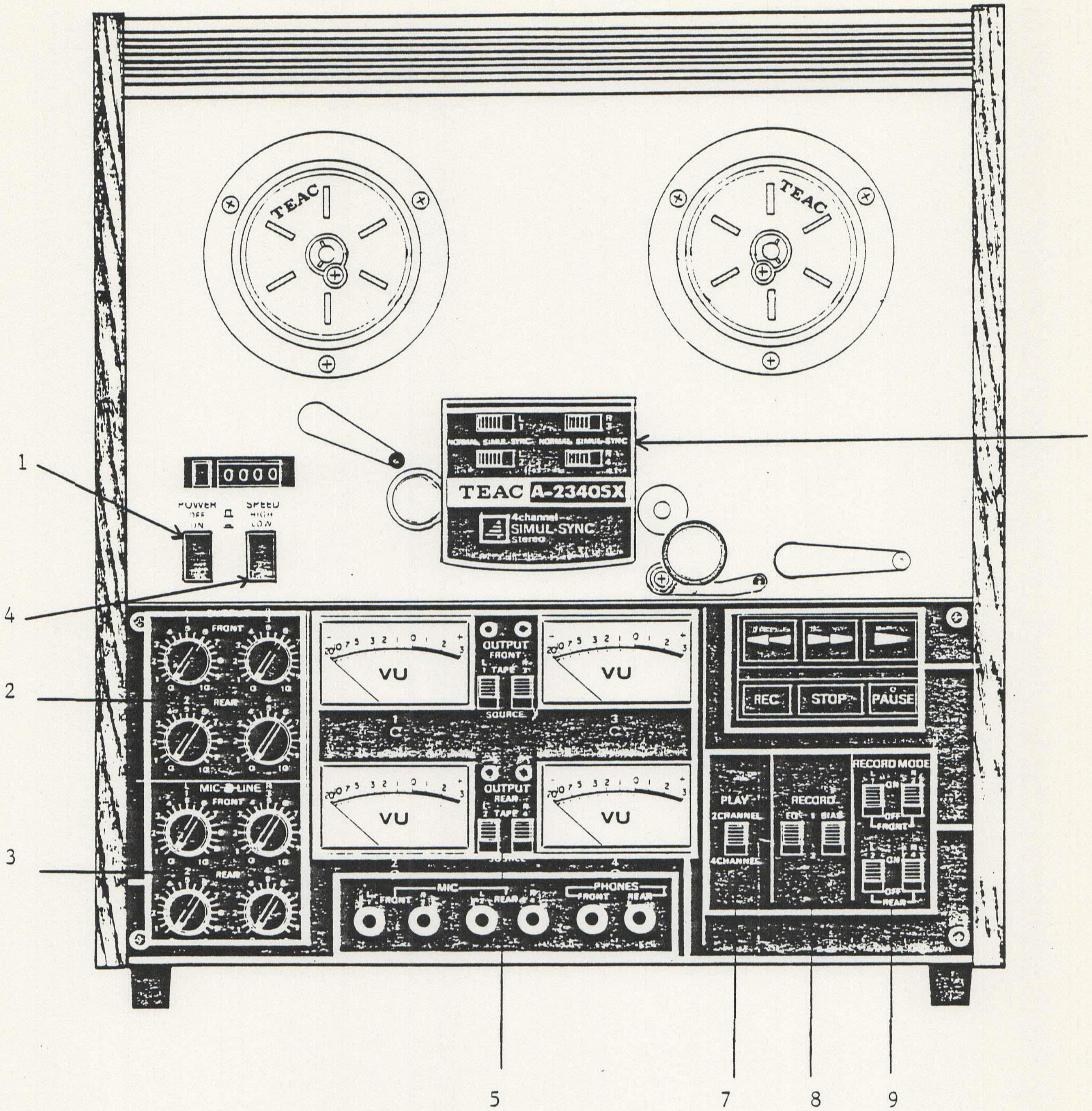
TEAC
TEAC
NORMAL SIMUL-SYNC NORMAL SIMUL-SYNC
TEAC A-2340SX
4channel SIMUL-SYNC Stereo
0000
POWER OFF ON
SPEED HIGH LOW
FRONT
REAR
MIC LINE
OUTPUT FRONT TAPE SOURCE
OUTPUT REAR TAPE SOURCE
VU
REC
STOP
PAUSE
PLAY 2CHANNEL 4CHANNEL
RECORD EQ BIAS
RECORD MODE ON OFF FRONT REAR
MIC FRONT REAR
PHONES FRONT REAR
1
2
3
4
5
7
8
9

1. Push power to "ON"
2. Set outputs to "8"
3. Set inputs to "0"
4. Set speed to "low"
5. Set outputs to "Tape"
6. Switch heads to "Normal"
7. Switch play to "4" channel
8. Switch record to "1"
9. Switch record mode to "OFF"

TEAC 2340 TAPE DECK

PREVENTATIVE MAINTENANCE

Maintenance for the Cyberamics System requires little time and effort. The few procedures outlined in this section, however, must be performed on a scheduled basis to ensure trouble-free operation.

There are maintenance procedures to be carried out at various intervals - daily, weekly, monthly, quarterly, and semi-annually.

DAILY MAINTENANCE

Clean the tape deck heads every morning by following these steps:

1. Rewind the tape onto the supply reel and remove. Remove the head cover and clean heads using a good tape head cleaner and cotton swabs. All cyber control racks, every day, should have the tape heads cleaned, including the background music tape deck. Cleaning the tape heads means cleaning all of the metal surfaces that the tape comes in contact with (tape heads, guides, capstans) except the rubber pinch roller. The most beneficial thing is to clean them every day. (Note: Do not leave tape head cleaner uncapped, it is hygroscropic - it will absorb moisture from the air.)

2. Re-thread and reset tape counter.

3. Fast forward the tape past "050" on the tape counter and press the RESET (on the control console) button. The tape will rewind to the first regular skit.

Check the air compressor system for the following:

1. Proper oil level and add oil if necessary using non-detergent 30 weight oil.

2. The air compressor should be checked briefly each morning. The water traps should be drained and the V-belt(s) should be visibly inspected without any disassembly or removal of the belt guard. Listen to the automatic drain valve (purge valve) for proper operation (bleed air off as necessary to acutate valve). The automatic drain valve operates on a pressure differential, anytime the air pressure drops about 15 to 20 lbs. psi the valve will be actuated. When the valve is operating correctly it will turn on and off with a clean, crisp sound and it will be on for about 3 to 15 seconds depending on what model of compressor and valve it is. When the valve is not operating properly it will make more of a "fluttering" or "sputtering" sound. Also, if it is running on longer than 20 seconds at a time or if it keeps turning on by itself without the appropriate air pressure drop in the main tank is not operating properly. The oil level on the air compressor should be briefly checked each day and oil added as

Daily Maintenance Cont.

needed. When checking the oil level it is important to be sure that one is not being mislead by oil stains on the sight glass (use a flashlight). In addition, the air dryer should be checked just to make sure that it has power. All of this daily morning inspection should take less than ten minutes.

3. Main air line filters for water, oil and drain as needed.

4. Main regulator gauge set for 60 psi.

WEEKLY MAINTENANCE

Time should be set aside each week, before the store opens, to carry out the following procedures:

1. Rewind, remove and set side skit tape.

2. Use swabs and head cleaning fluid to clean tape heads, tape guides, pinch rollers and capstan.

3. Demagnetize the tape heads by using the tape head degausser. Be sure the skit tape is placed in a safe place away from degausser and power is off to tape deck. To demagnetize the heads, plug the degausser into an AC source and hold its top next to the tape heads for 5 to 10 seconds. Slowly pull the degausser away from the heads to approximately two feet and disconnect AC power.

4. All of the tape deck settings should be quickly checked with particular attention to the gain controls. Also, check the control switch lights, particularly the remote control, for proper operation. The switch light bulbs should be replaced with either a special insertion/extraction tool or a drinking straw. Do not use needle-nose pliers or other tools, if you already have a special tool fine, if not don't bother getting one, just use a drinking straw. If the button caps are becoming illegible with wear, swap them with the set on the rack controls. Check for proper operation of the auto-reverse function on the background music tape deck.

5. Run each of the special function skits (birthday, cheer, intro) and a regular skit, while walking around the theatre watching for smooth operation of each character. The diagnostic tape "DR. DUCK" may be run to check individual parts of each character in rotation.

Weekly Maintenance Cont.

6. The spare board inventory should be done every week and entered in the appropriate spaces. The spare boards should include one (1) CPU card and one (1) audio card. If any of the cyber racks has a direct output revision (audio card) then the spare must be a direct output rev. - a direct output card will work in older systems, but an older audio card will not work in a direct output system. The spare inventory should also include one (1) light driver card if any of store's cyber systems use a light bar. Two or three (2 or 3) spare character driver boards should be present, as well as one (1) transport card for each type of tape deck (X-7 or 2340) present in the store (not one for each rack). There should be a spare set of EPROMs for each cyber rack system and these should also be inventoried each week. The inventory should reflect what is actually at the store and not what you should have. In addition, a bad board is useless and not considered a spare. It should be sent to Technical Services for repair or exchange.

   In general, the cyber racks should be maintained intact, clean, and free of junk and storage items. All of the cables should be kept in a neat and dressed manner that prevents any strain and minimizes vulnerability to accidental damage or disconnection. It is highly recommended that all tape deck settings be marked as to their correct positions so that a manager on duty (in a Technical Manager's absence) could quickly peruse the tape deck for any simple problem that has "downed" a system. Tape deck cleaning supplies should be kept near the rack for simple time efficiency.

7. Cyberamic System Noise Test

   Noisy operation of the characters and assemblies is not only a major aesthetic concern but also an obvious indication of mechanical disrepair. A noise test is very simple to perform by anyone and is accomplished by turning the audio system completely off, running a skit, and writing down any items that are making noise. If a particular cyber rack has the main amp located at the rack then turning the audio system off is a simple matter of turning off the amp power switch. If the main amp for a system is not located at the rack then the procedure would be to remove the audio board (the system will run without an audio board). The way to do this is to turn the rack power off, slide the audio board out a couple of inches (it is not necessary to remove it all the way), turn the power back on and play a skit(s). When finished turn the power off, re-insert the audio board, then turn the power back on and the system is ready to go. (Note: the audio board is always the board second from the left.) A good project consideration would be for the technician to move the main amp (in situations where it is on the stage, at the character, or in the ceiling) to the rack location. This way the "BOOM-CRASH" of turning the rack on and off, which is very annoying to people, could be prevented Of course, the rack is not typically turned on and off while the store is open, but if there is a problem or downed system a Technical Manager will be turning it on and off alot and the dining room may shortly be vacated.

Weekly Maintenance Cont.

IN ADDITION:

Preventative maintenance should be performed on (3) cyber characters (mainstage) per week as follows:

1. Partially undress the character for inspection and cleaning.
2. Remove the back of the head by releasing the velcro tabs at the top and bottom. Most characters have three tabs.
3. Release the velcro tabs along the rear or side seams of the clothing and remove any pins.
4. From the front of the character, pull off the fabric covering the arms.
5. Pull the clothing forward over the arms to expose the characters' air lines and mechansims.
6. Check for signs of wear. Use a rag to clean moving parts, then blow with compressed air holding a rag behind the part to be cleaned. Re-oil with NYOIL, GUNOIL, or 3-IN-ONE OIL.
7. Check all exposed nuts and bolts for tightness.
8. Noise is a constant problem with the animation and should be dealt with as part of the PM process. Typically the worst sources of noise are (in order) the mouth assembly, the eyelids, and the eyeballs. Replacing worn parts and using rubber "bumpers" on the air cylinder shafts will eliminate most noise. Whenever using rubber stops (or any rubber for a mechanical use) always use Neoprine (black) because it will not disolve or gum up like plastic or vinyl tubing. Automotive fuel hose is usually the best approach because it has a reinforcing fiber layer.
9. Essentially, the PM of the cyberamic characters is very simple and self-evident. The key to character PM work is that the assemblies are lubricated, quality work is performed, and that the PM is done. Generally lubrication is done with 3-in-1 oil (or Nye oil) and the lubrication points are outlined in the Standard Operating Procedures Manual. Disregard the note on the form about cylinder shaft lubrication. The cylinder shafts should be wiped off first, then re-lubricated with just a small drop of oil wiped around the shaft. Lubriplate (brand name, a light high-grade assembly grease the consistency of toothpaste) should be used on the mouth cylinder shaft (and inside when rebuilding it), the King leg cylinder mounting pistons (the visable part of the leg cylinder assembly), and in the rebuilding of 4-way valves. All of the 4-way valves can be completely disassembled, thoroughly cleaned, and rebuilt using new O-rings and some Lubriplate. These valves should have a very long life through rebuilding because the only part to wear is the O-rings and these can usually be purchased locally and are inexpensive.

Weekly Maintenance Cont.

All of the air cylinders except the mouth cylinder are sealed units and rebuilding them should never be attempted. The mouth cylinder can be disassembled, cleaned, and rebuilt with only typical wear points being the threaded bushing (and the O-ring underneath it) on the shaft. Graphit, WD-40, and similar products should NEVER be used anywhere on the animation.

10. With CLEAN HANDS, re-dress character, remove any spots from clothing, brush and fluff as per character cosmetic instructions.

11. Perform a DR. DUCK'S Diagnostic Test on the characters having maintenance performed.

How to Use Dr. Duck's Diagnostic

Stage and Shelf Cyberamic Systems:

To play ALL character diagnostics sequentially:

PRESS	TO GET
RESET	
PROG	
DIAG	Lights
NEXT	Warblettes
NEXT	Munch
NEXT	Jasper
NEXT	Chuck E. Cheese
B'DAY	Guest
CHEER	Pasqually
SPECIAL	Band
INTRO	Clapper/Flags
NEXT	15 Min. of Work Light

To play DIAGNOSTICS by individual character..............

CHARACTER	PRESS					
Lights	RESET	PROG	DIAG			
Warblettes	RESET	PROG	NEXT			
Munch	RESET	PROG	SKIP	NEXT		
Jasper	RESET	PROG	SKIP	SKIP	NEXT	
Chuck E. Cheese	RESET	PROG	SKIP	SKIP	SKIP	NEXT
Guest	RESET	PROG	B'DAY			
Pasqually	RESET	PROG	CHEER			
Band	RESET	PROG	SPECIAL			
Clapper/Flags	RESET	PROG	INTO			
15" of Lights	RESET	PROG	SKIP	SKIP	SKIP	SKIP	NEXT

Dr. Duck's Diagnostic System Cont.

CABARET SYSTEM:

1. Put Dr. Duck's diagnostic tape on cabaret system rack, play the clear leader and zero the reel counter at the end of the clear leader.
2. Fast forward tape to reel count 550.
3. Press RESET.
4. When RESET light goes out, press PROG, cabaret diagnostic will play.

CYBERS, Lounge & Cabaret

1. Complete items 1-9 above for each cabret character, every other week.

NOTE: If you have two cabaret characters, you will be doing one per week in addition to the three mainstage characters!

AIR DRYER

Check the air dryer for proper operation. The air dryer works through refrigeration on the principle that humidity is a function of temperature (dew in the morning, frost in your freezer). The only practical aspect of PM on the air dryer is to make sure that the condenser coil is clean for good air flow and heat dissapation. The two simple ways of checking that the air dryer is working is by checking that the water filter after the air dryer is getting condensation, and by inferring that if the condenser coil is hot then the evaporating coil is cold.

MONTHLY MAINTENANCE

Time should be set aside every month to service:

1. The Flags and Feature Board (perform as character maintenance).

2. POP-UP STOOLS

   Essentially the preventative maintenance of the pop-up stools is oriented to keeping all of the assemblies tight. The chain should be lubricated with a heavy chain-lube or perhaps a grease because of its slow speed. The idler should be adjusted, if necessary, to keep the chain taut. Any zerk fittings present should be lubed with a grease gun. The seat post should be greased from the inside of the cabinet, but only to the extent that any exposed part of post (when the stools are assembled and running) do not have any grease on them. There are several things that can be done to prevent stools from becoming a major source of noise. One item would be to disconnect the electric disc brake mounted on the back of the motor - the design of instant breaking is not worthwhile compared to the noise that it creates and this has already been eliminated on later generation stools. Another consideration would be to put self-sticking rubber feet on the underside of the stool seat on models that allow the stool to rest on the cabinet. A major reduction in noise would come from adhering a strip of leather (an appropriately sized belt blank would be good, leather for its durability) around the cam so the seat-post roller contacts this instead of metal.

3. AIR COMPRESSOR

   The air filter(s) should be checked and either cleaned or replaced if necessary. In smaller compressors where a felt filter is used they can be removed and carefully washed and rinsed (by hand) with soap and water, dried, and re-installed. In compressors that use a paper element filter, the filter should be inspected and replaced when necessary (anticipate - have a spare on hand). Foam air filters should be avoided and replaced with a paper element filter.

4. Discard any background tapes that are 30 days old and order replacements through the Technical Services. Be sure to date new tapes as they are received.

QUARTERLY MAINTENANCE

Time should be set aside every quarter to service:

1. The skit tape should be replaced every three months.
   Tape rotation should be strictly adhered to and organized. This would help to alleviate problems with the control system, along with tape deck PM, because a good majority of the causes of erratic operation or a down system are related to the tapes and tape

Quarterly Maintenance Cont.

decks. Each cyber control rack should have a total of four tapes (all of the same character/skits) - two new tapes, one tape in use on the rack, and a spare (used) tape. The usage and rotation begins with the new tapes, which the store should have two of on hand and which should be labeled as a new tape with the date of receipt. When a new tape is moved to the rack it should be re-labeled as the rack tape with the date that it is initialized (installed on the rack). The rack tape should then be re-labeled as the spare tape along with the new date. The spare tape should then be immediately discarded. If when rotating tapes it is obvious that the old rack tape is in worse condition than the spare, then discard the old rack tape and retain the spare as the spare. All troubleshooting should be done with the spare tape, not the new tapes. If the spare tape is definitely bad when troubleshooting, then discard the spare and rotate the tapes in the proper order and re-label them. This may seem a little over-cautious to some but it eliminates the problems of not having tapes on hand or the situation that often exists that there are tapes around but all mixed up and of questionable condition. Background tapes, of which the minimum inventory should be four, should be discarded and replaced after four weeks (every period) of use.

2. COMPRESSOR

In the PM'ing every period the oil needs to be drained and replaced. Typically 30 wt. non-detergent oil is used in the air compressors, but some instances may call for a different type of oil. For example, in a very cold climate where a compressor is exposed to outside temperatures, it might be advisable to use a true synthetic motor oil (no graphite) to prevent stalling in the morning. The automatic drain valve (see description above) should be disassembled and cleaned when necessary but at least every 8 weeks. All air compressors should have a shut-off valve between the air tank and the automatic drain valve so that the valve may be serviced at any time and also in case the valve goes completely bad. The automatic drain valve's internal mechanism is a simple use of valves and a diaphram and will, under normal operation, slowly accumulate a build-up of "sludge" that can prevent it from operating properly. The air compressor should be cycled as follows: Using the safety valve, bleed off air until compressor cycles on. Record the air pressure reading at turn on (low) and shut off (high) then record the time between the two.

The V-belt(s) should be carefully inspected, removing the belt guard as necessary, for any splitting, cracking or burn points. Any burn points on the belt(s) require immediate attention and are an indication that the air pump head is stalling or freezing (a "burn point" is a polished/partially melted area of the belt). Belt tension should be checked and adjusted if necessary. Proper belt tension is about 1/2 an inch of deflection when moderate pressure (about 20 lbs.) is put on the belt (half-way between

Quarterly Maintenance Cont.

the pulleys). The belt guard must be put back in place after it is removed. In air compressors that use 2 V-belts if either one or both are going to be replaced then they both must be replaced with a new matched pair of belts. The only way to have a matched pair of belts is to purchase them that way as a pair.

The air pressure on-off relay should also be inspected, particularly on 220 volt 3 phase systems. The relay contacts should be cleaned (not burnished or sanded) with something hard and fibrous (skee-ball tickets are excellent). This is not very critical with single phase systems, but it is in a 3-phase system. The typical configuration in a 3 phase relay is that one "leg" (or phase) is hard-wired (always on) and the other two legs are switched by a two pole relay. Each pole is actually three leaf design with two outer fixed lead contacts and a "floating" center leaf contact. The problem arises when, because of sticking (arcing) or a burr, one of the center contacts does not close but the other one does. A three phase motor will not turn over receiving only two "legs" of the power and will overheat. With a little luck the breaker will trip, if not the motor will be fried (burnt out). Another caution to observe is that the fuses (if they exist) are rated over the circuit breakers so that if anything happens the breakers trip, not the fuses.

Essentially, this is the preventative maintenance of the air compressor and air dryer. The only other aspects are to keep spare belts, oil, and air filter on hand. Also, to keep the compressor in reasonably clean condition and to keep everything (junk, supplies, stored items) off of and away from the compressor.

TRANSPORT CONTROL MODULE

DESCRIPTION

The TCM provides an interface between the CPU and a TEAC tape drive. It accepts commands from the CPU and controls the deck functions directly, using TTL levels (X-7 TEAC) or through relays (2340 TEAC). The current command is displayed by on board LED's.

Data from Channel 3 of the tape deck is pumped into the board for data processing. The serial data stream is filtered and the clock pulses are separated out. The data is made parallel through a 1602 Uart, and put on the bus by a 6821 PIA.

FUNCTION

Digital control over the deck is straight forward, commands from software come over Port B of U2 (PIA). They are buffered (U9) and they drive the TEAC control lines and LED's. The newer style X-7 drive uses these TTL levels. The older 2340 TEAC's need a switched 24V control, so commands are isolated by encapsulated reed relays (K1, 2, 3, 4). No logic is performed here, just voltage separation.

Data from Channel 3 is amplified through U11 and then converted to a TTL level through two comparators (U10, U12). These also provide noise immunity to keep the system from responding from errors. One shot U7 regulates the data into consistent pulses, and then sets up the time/width related inputs to U4. This adder circuit separates data from the clock pulses and feeds the data serially through U8 and U5 to the UART.

The 1602 UART takes the data in at 4800 Baud and transforms it to parallel from Port A of the PIA (U2) reads this data when commanded by software.

PECULIARITIES

This is the most critical board in the cyber system. One pot (R3) is used to adjust the pulse width of a separator one shot. No other cables or jumpers are needed.

There are two different types of TCM board. They are NOT interchangeable! Make sure the board with relays is only used to control a 2340 TEAC. If a non-relay board is substituted, the output buffer U7 will explode!

Transport Control Module Cont.

TEST

Make sure the card to test is the proper type for the deck used. A card with 4 relays in K1-4 is to be used only with a TEAC 2340.

1. Give the board a good visual inspection and correct any problems.
2. Insert TCM and a CPU in rack and power up.
3. After the diagnostic light comes on, the deck should not move.
4. Verify that the function LED's on the TCM come on when activated by the proper CP button. The deck should take action as follows:

Button Pressed	TCM LED Pulse	Deck Action
Birthday	DS 2	Rewind
Cheer	DSO (Bottom)	Stop
Next	DS 3	Play
Program	DS 1	Fast Forward

5. This test verifies that at least half of the PIA-U1 is working. Any problems, contact Technical Services.

TEST POINTS

TP1	Audio/data from TEACH ch. 3 (1vppp)
TP2	Data after 1st preamp (10 vpp)
TP3	+5V
TP4	-12V
TP5	+12V
TP6	Selected data/clock stream (.7 us) TTL)
TP7	One shot filter output (150us) (TTL)
TP8	Reset (0) if carrier present
TP9	Ground
TP10	Comparator input

LED DISPLAY

DS1	Stop (all LEDs active when lit).
DS2	Fast forward
DS3	Rewind
DS4	Play
DS5	Carrier
DS6	Data (top LED)

222

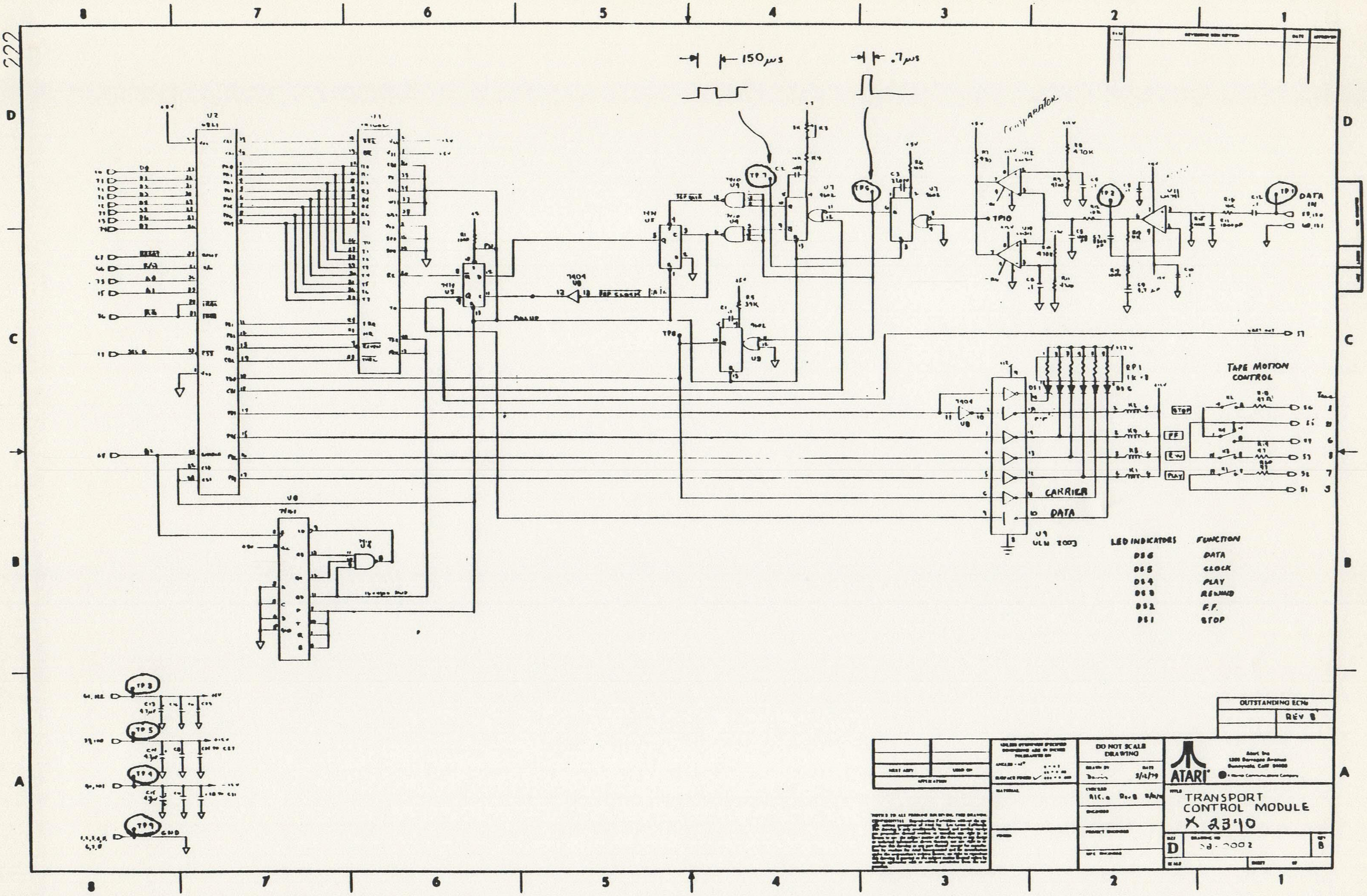
150μs
.7μs
Comparator
TP7
TP6
TP1
TP2
TP10
TP8
DATA IN
U2
U1
U3
U4
U7
U8
U9
U11
7404 U8
470K
39K
CARRIER
DATA
U9
ULN 2003
RP1
1K×8
TAPE MOTION CONTROL
STOP
FF
RW
PLAY
S6
S5
S4
S3
S2
S1
S7
TP3
TP5
TP4
TP9
GND
8
7
6
5
4
3
2
1
D
C
B
A

LED INDICATORS	FUNCTION
DS6	DATA
DS5	CLOCK
DS4	PLAY
DS3	REWIND
DS2	F.F.
DS1	STOP

OUTSTANDING ECNs

REV B

DO NOT SCALE DRAWING

DRAWN BY Davis DATE 3/12/79

CHECKED Ric. a Rev B

ATARI®

Atari Inc

1265 Borregas Avenue

Sunnyvale, Calif 94086

A Warner Communications Company

TITLE

TRANSPORT
CONTROL MODULE
X 2340

SIZE D DRAWING NO. 38-0002 REV B

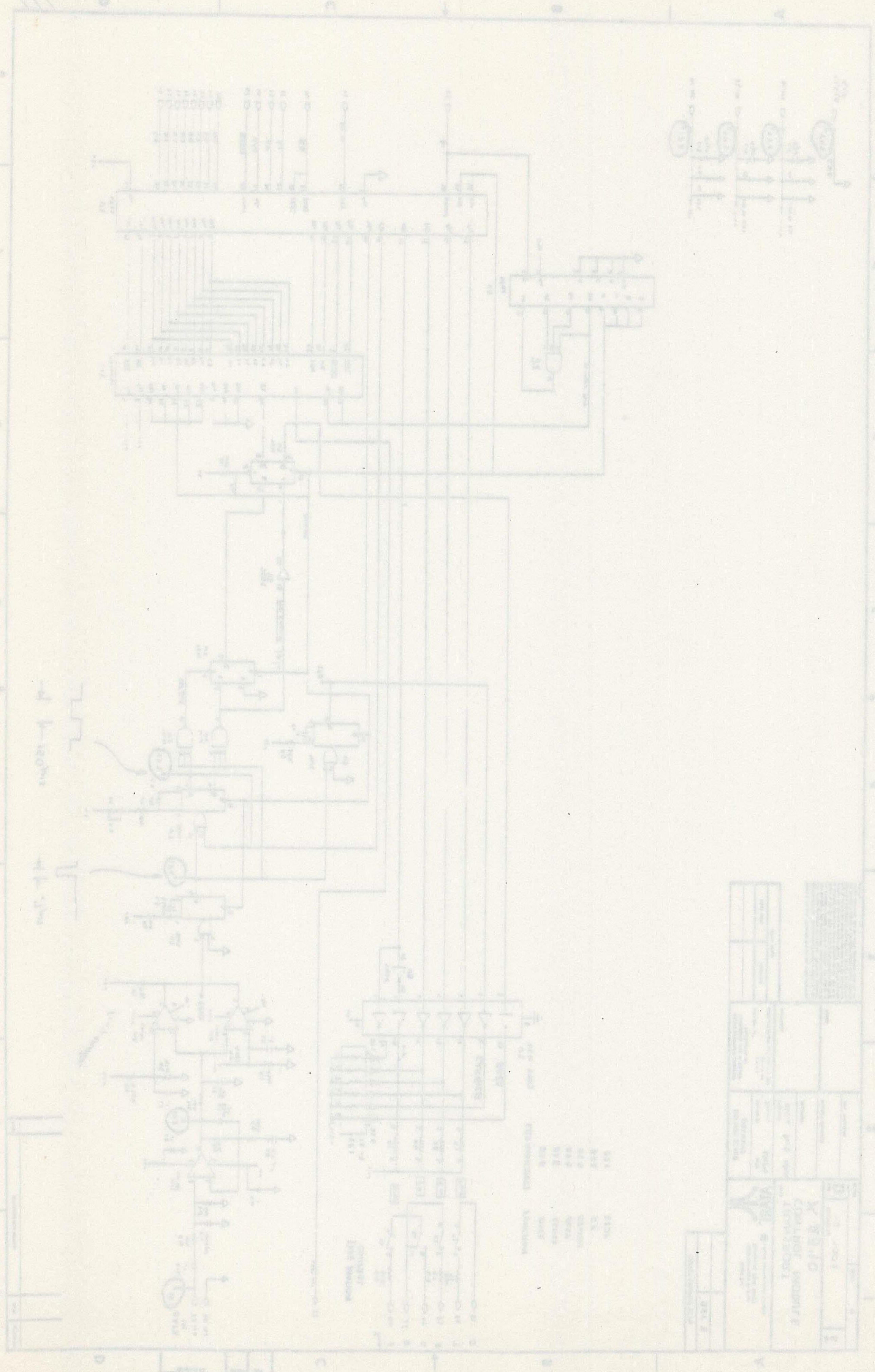

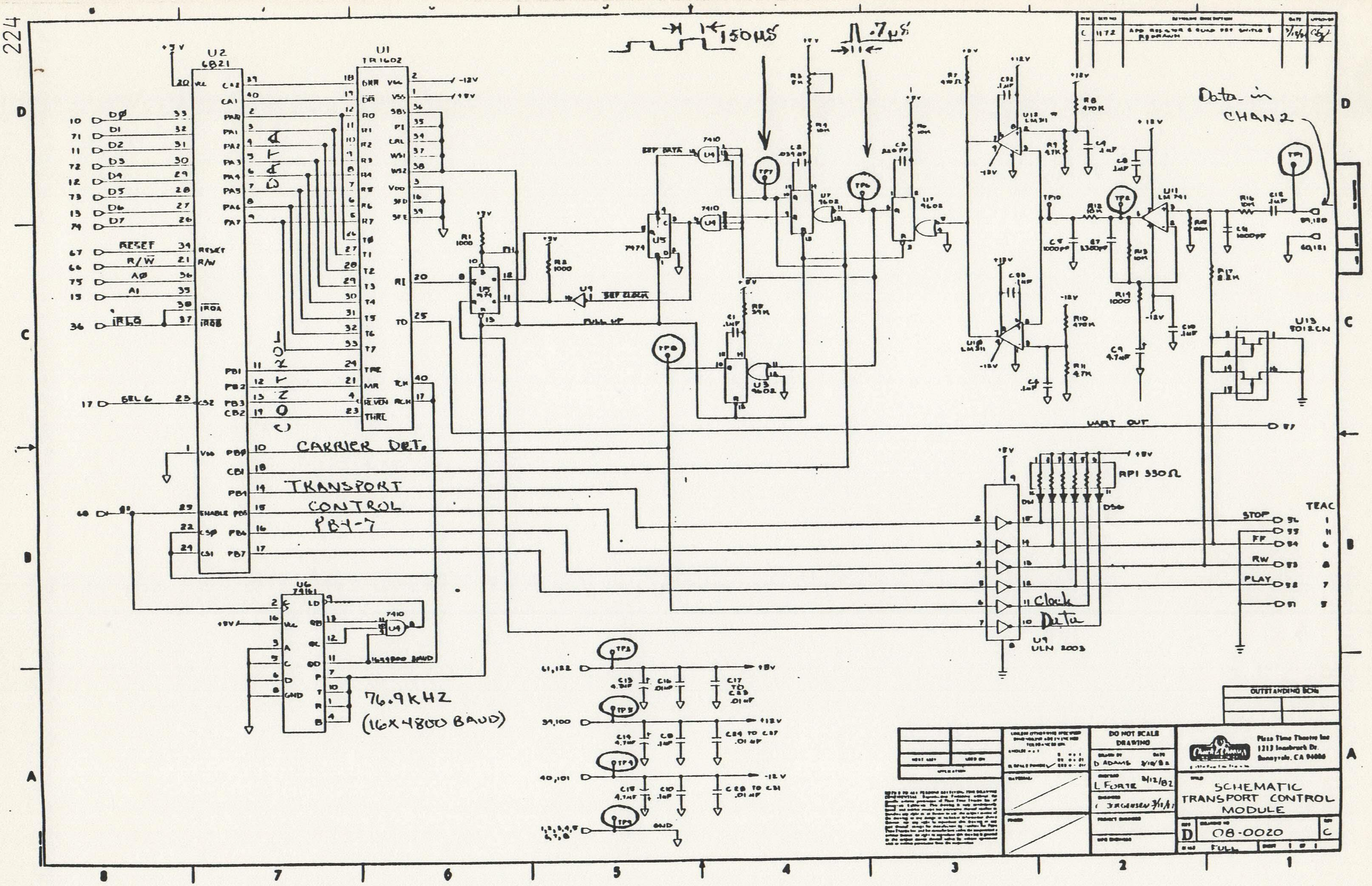
150μS
.7μS
Data in CHAN 2
U2 6821
U1 TR1602
D0 D1 D2 D3 D4 D5 D6 D7
RESET
R/W
A0
A1
IRQ
SEL 6
CARRIER DET.
TRANSPORT CONTROL PB4-7
UART OUT
U6 74161
76.9KHZ (16X4800 BAUD)
4800 BAUD
SEP DATA
SEP CLOCK
FULL UP
U9 ULN 2003
RP1 330Ω
Clock
Data
STOP
FF
RW
PLAY
TEAC
U13 5012CN
U11 LM741
U12 LM311
U10 LM311
U7 9602
U3 9602
U5 7474
U4 7410
TP1 TP2 TP3 TP4 TP5 TP6 TP7 TP8 TP9
+5V
+12V
-12V
GND
OUTSTANDING ECNs
DO NOT SCALE DRAWING
DRAWN BY D ADAMS 3/10/82
L FORTE 3/12/82
JORGENSEN
Pizza Time Theatre Inc
1213 Innsbruck Dr.
Sunnyvale, CA 94086
SCHEMATIC TRANSPORT CONTROL MODULE
D 08-0020 C
SCALE FULL
SHEET 1 OF 1

6821 - PIA
1602 - UART

VLN 2003 - Hi-Volt Driver
74161 - 4 Stage Counter

9602 - Data Set

AUDIO CONTROL BOARD

DESCRIPTION

The ACB has two major functions: ambient noise sensing, and overall volume control. The ambient mike is inputted to a preamp, filter, rectifier, and finally digital comparators. LEDs display their outputs and a PIA feeds the data to the bus.

The other half of the same PIA outputs a digital volume level which controls four separate audio channels. All channels are controlled by the same command, but contain separate audio signals.

FUNCTION

The two ports of U1 control the audio functions of the Cyber system. Input Port A of U1 gives the CPU the exponentially digitized ambient noise level. This signal is processed on-board directly from a microphone. The first two stages of U10 provide a gain of 10,000. The third stage converts the signal to a DC value which is then averaged in the final stage of U10. The resistor divider network R2-R10 provides voltage references for the comprators. These 8 levels provide an expotential representation of the volume. Port A of U1 read this value, as do the LED driver U4.

After the CPU processes this ambient level, it outputs a volume level to Port B (U1). These 8 lines feed 4 Dac's, which act as volume controls (U5-8). In a standard cyber or cabaret system, only 2 are used, order/background and ch. 1.

PECULIARITIES

Four separate audio signals may be controlled (attenuated), only 2 are used. The comparator's base value must be "tuned" (R19).

Two volume pots are provided for field adjustment.

TEST

1. The ACB must be visually inspected and corrected before testing.

2. Insert board and CPU, power up.

3. Connect a mike or signal source to "AMB IN" or J17. Verify that audio level is registered on the ACB's LEDs. Increasing volume increases the number of LED's lit.

Audio Control Board Cont.

4. Press Rest, Diag., now the CPU is reading this audio level and displaying it on the CPU's LED's. They should be the same except the CPU has one more bit of accuracy.

5. If the patterns are different the ACB's PIA has got a problem.

6. Contact Technical Services if any problems are detected.

TEST POINTS

TP1	Ground
TP2	Comparator input (mike DC)
TP3	Ambient x10,000 (mike AC)
TP4	-12V
TP5	_12V
TP6	∓ 5V

LED DISPLAY

Seven LED's provide a hardware, direct readout of processed ambient level, no software control.

DS1	65db (Botton LED)
DS2	68db
DS3	71db
DS4	74db
DS5	77db
DS6	80db
DS7	83db (Top LED)

The decible readings above are taken with the "AGC" control knob on the control panel set at "0". The following chart indicates the voltage out of the "AGC" controller in reference to the control knob settings.

AGC	OUTPUT
-4	0 MV
-3	4 MV
-2	8 MV
-1	16 MV
-0	32 MV
1	64 MV
2	128 MV
3	256 MV
4	512 MV
5	1.024 VPP

CPU CARD

DESCRIPTION

The brains of a cyber system are in this 6502 based CPU card. Voltage regulation is performed on the -5V line only. Three sockets are provided for 2708 Eproms. A 1 MHz clock is generated for CPU and system use.

Four parallel I/O ports are provided via two 6532's (U18, U19) which are programmed to perform I/O as in the schematic. Program RAM and stack are also located in these IC's. A cyber system makes use of a timer feature in U18, that in U19 is unused. Character driver modules Character driver modules are enabled through U11, a BCD/DEC decoder. All address and data lines are buffered for off board use.

FUNCTION

The CPU processes a program in the E-proms and through ports and enables, commands the entire system. Front panel switches and lamps are controlled directly from the I/O of U18.

The reset lamp, AGC and a mike sense switch are handled in U19, whose A port controls the CPU's LED indicators. A jumper in XU1 is required for operation. It can be removed for diagnostic purposes.

PECULARITIES

The CPU has no external adjustments, and only requires a XU1 plus an Eprom(s) to be complete.

LED DISPLAY

Eight LED's on board are under total software control. They have two meanings when a Cyber B program is running. If the tape is in search mode, the skit number is displayed. Any other time the AGC level comes through.

TEST POINTS

DS1	128 (Top LED)
DS2	64
DS3	32
DS4	16
DS5	8
DS6	4
DS7	2
DS8	1 (Bottom LED)

TP1	-5
TP2	-12V
TP3	Ground
TP4	+12V
TP5	+5
TP6	Nop line - to be grounded to produce NCP's
TP7	U18, CS1, +5V
TP8	U10, CS2, +5V
TP9	IRQ, +5V

236

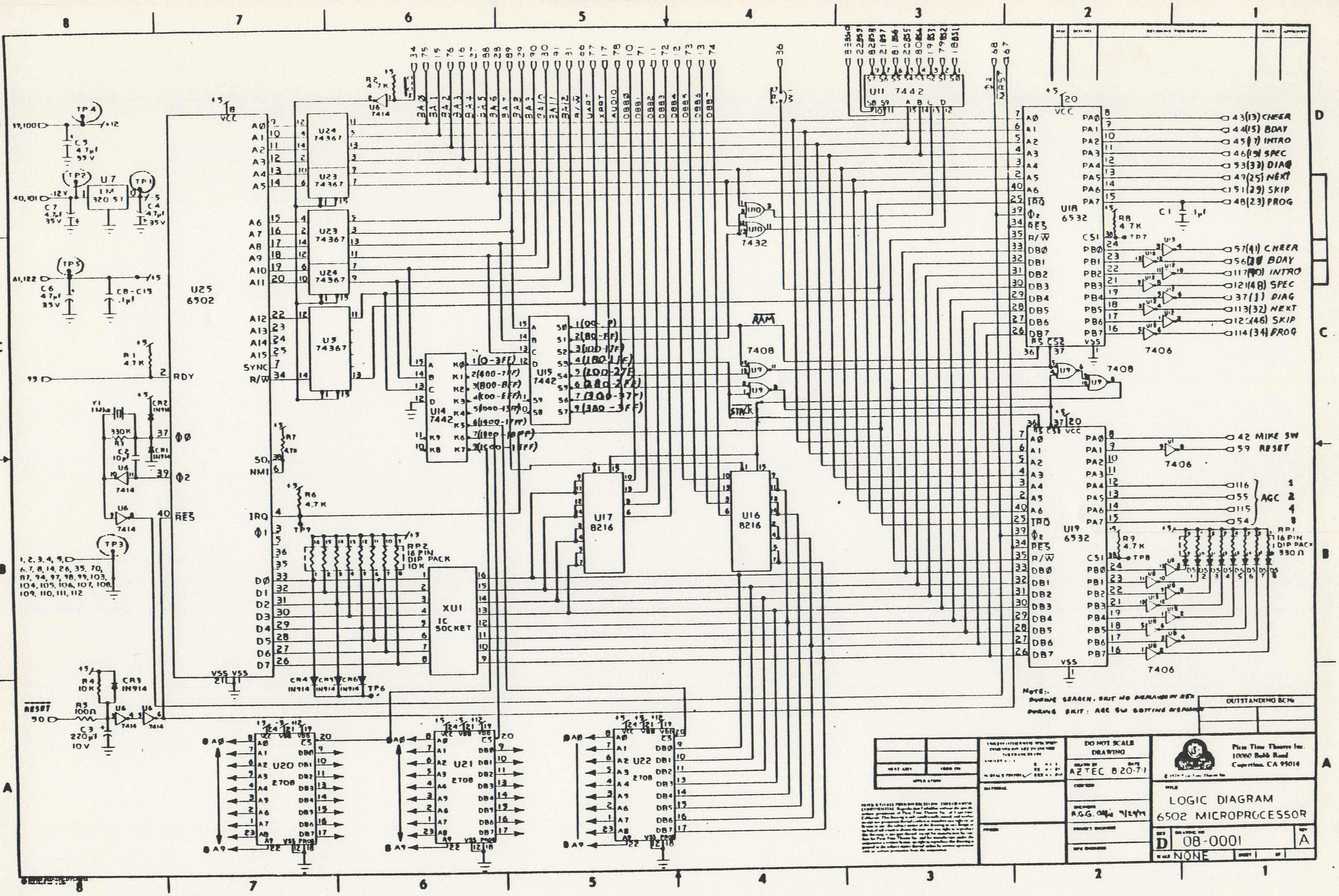

U25 6502
U24 74367
U23 74367
U9 74367
U6 7414
U7 LM320 5T
U11 7442
U10 7432
U14 7442
U15 7442
U17 8216
U16 8216
U18 6532
U19 6532
U9 7408
XU1 IC SOCKET
RP2 16 PIN DIP PACK 10K
RP1 16 PIN DIP PACK 330 Ω
U20 2708
U21 2708
U22 2708
7406
RAM
STACK
TP1
TP2
TP3
TP4
TP5
TP6
TP7
TP8
TP9
Y1 1 Mhz
R1 4.7K
R2 4.7K
R4 10K
R5 100Ω
R6 4.7K
R7 47K
R8 4.7K
R9 4.7K
C3 220µf 10V
C4 4.7µf 35V
C5 4.7µf 35V
C6 4.7µf 35V
C7 4.7µf 35V
C8-C15 .1µf
C1 .1µf
CR1 IN914
CR2 IN914
CR3 IN914
CR4 IN914
CR5 IN914
CR6 IN914
RESET
RDY
Φ0
Φ2
Φ1
RES
IRQ
NMI
SYNC
R/W
1(0-3FF)
2(400-7FF)
3(800-BFF)
4(C00-FFF)
5(1000-13FF)
6(1400-17FF)
7(1800-1BFF)
8(1C00-1FFF)
1(00-7F)
2(80-FF)
3(100-17F)
4(180-1FF)
5(200-27F)
6(280-2FF)
7(300-37F)
9(380-3FF)
43(13) CHEER
44(15) BDAY
45(17) INTRO
46(19) SPEC
53(33) DIAG
49(25) NEXT
51(29) SKIP
48(23) PROG
57(41) CHEER
56(39) BDAY
117(40) INTRO
121(48) SPEC
37(1) DIAG
113(32) NEXT
125(46) SKIP
114(34) PROG
42 MIKE SW
59 RESET
116
55
115
54
AGC 1 2 4 8
1, 2, 3, 4, 9, 6, 7, 8, 14, 26, 35, 70, 87, 94, 97, 98, 99, 103, 104, 105, 106, 107, 108, 109, 110, 111, 112
39,100
40,101
41,122
99
50

NOTE:-
DURING SEARCH, UNIT NO DISPLAYED IN HEX
DURING EXIT: AGC SW SETTING DISPLAYED

OUTSTANDING ECNs

DO NOT SCALE DRAWING

DRAWN BY AZTEC DATE 8-20-77

ENGINEER A.G.G. 9/24/77

Pizza Time Theatre Inc.
10060 Bubb Road
Cupertino, CA 95014

TITLE LOGIC DIAGRAM 6502 MICROPROCESSOR

SIZE D DRAWING NO 08-0001 REV A

SCALE NONE SHEET 1 OF 1

CHARACTER DRIVER BOARD

DESCRIPTION

The CDB provides 14 latched ground control output lines. Each line has a display LED which is on when that line is low (neg logic).

Also provided is a program controlled, fused +24 Vdc power source. On power up, the supply is cut off, later turned on by software.

The board also has a software selectable 4 channel audio switching circuit. The gain is adjustable on the final amplifier before it is presented to an external power amp.

FUNCTION

Each character has a separately addressable control card. This provides an interface between the CPU and the pneumatic solenoids used for character action. Power transistor Q1 is used to make the whole character disabled by switching off its solenoid power.

The latched data outputs provide a ground for each action. The LED and that solenoid both turn on when U7's output port line goes high.

The last two bits of the 16 available I/O lines from the PIA (U7) go to a 2 to 4 decoder (U14). These 4 outputs control a FET switch which select any of 4 audio channels. Op amps U15, and U9 perform a variable gain to be fed to an audio amp.

PECULIARITIES

Each board has an addressing plug (header), which selects one of ten software locations. This plug must be in to operate.

If the 24V return line is interrupted, the switched current will interfere with CPU logic and a down system will result! Verify CR1.

The 14 LED's indicate active state of the character's particular movements; they should all be off on power up.

TEST POINTS

TP1	Ground
TP2	+5V
TP3	+12V
TP4	-12V
TP5	+24V to character power
TP6	Audio Out

LED DISPLAY

Lit LED's indicate an active function for that character, should be off during power up.

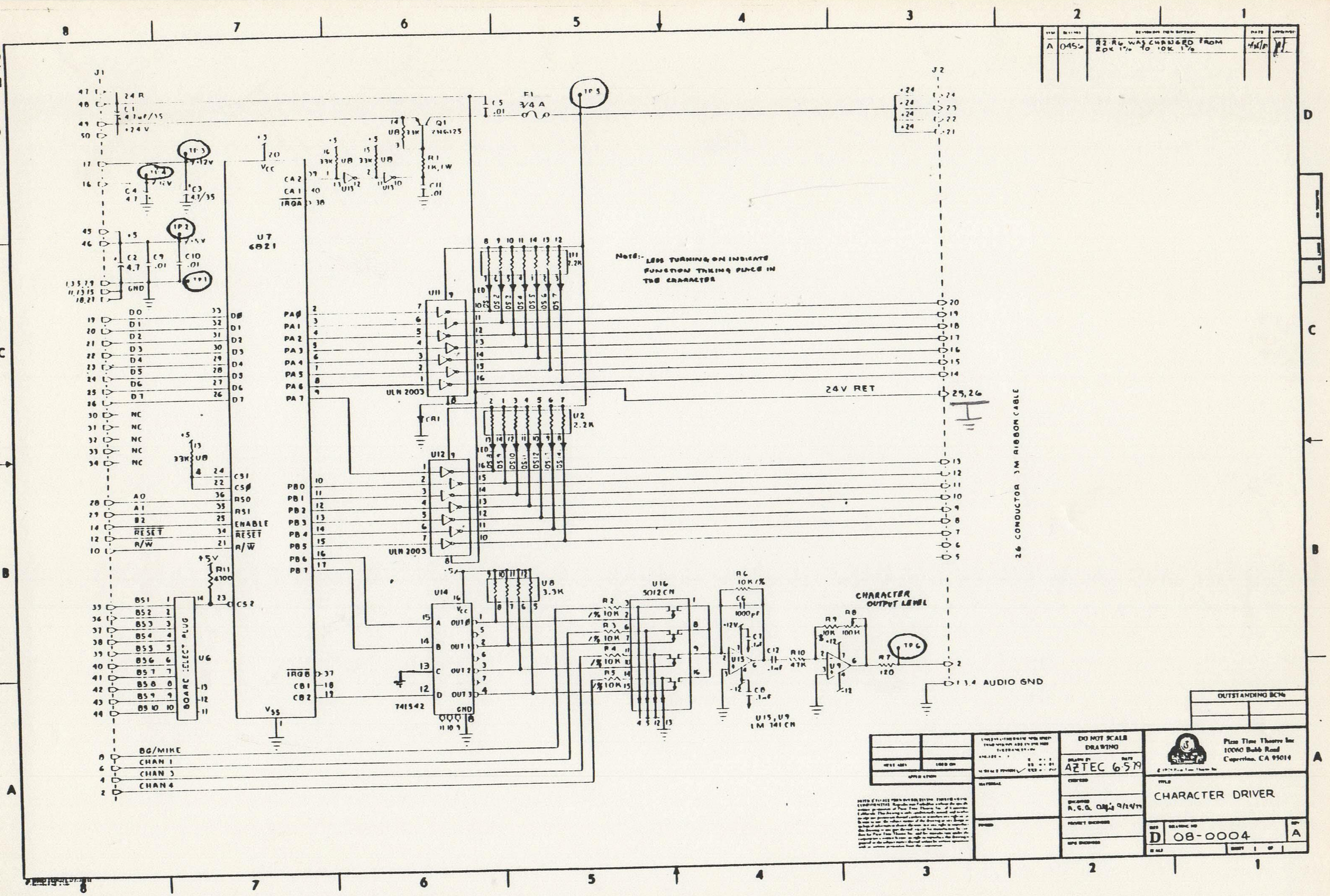
J1
24 R
C1 4.7uf/35
+24 V
TP3 +12V
TP4 -12V
C4 4.7
C3 4.7/35
+5
TP2 +5V
C2 4.7
C9 .01
C10 .01
TP1
GND
D0
D1
D2
D3
D4
D5
D6
D7
NC
A0
A1
B2
RESET
R/W
BS1
BS2
BS3
BS4
BS5
BS6
BS7
BS8
BS9
BS10
BOARD SELECT PLUG
U6
+5V
R11 4700
CS2
U7
6821
VCC
VSS
CS1
CS0
RS0
RS1
ENABLE
33K U8
CA2
CA1
IRQA
IRQB
CB1
CB2
PA0
PA1
PA2
PA3
PA4
PA5
PA6
PA7
PB0
PB1
PB2
PB3
PB4
PB5
PB6
PB7
33K U8
U13
Q1 2N6125
R1 1K,1W
C11 .01
C5 .01
F1 3/4 A
TP5
U11
ULN 2003
U12
ULN 2003
CR1
U1 2.2K
U2 2.2K
DS 1
DS 2
DS 3
DS 4
DS 5
DS 6
DS 7
DS 8
DS 9
DS 10
DS 11
DS 12
DS 13
DS 14
Note:- LEDS TURNING ON INDICATE FUNCTION TAKING PLACE IN THE CHARACTER
J2
+24
24V RET
25,26
26 CONDUCTOR 3M RIBBON CABLE
U14
74LS42
OUT0
OUT1
OUT2
OUT3
GND
U8 3.3K
R2 1% 10K
R3 1% 10K
R4 1% 10K
R5 1% 10K
U16 5012CN
R6 10K 1%
C6 1000pf
C7 .1uf
C8 .1uf
+12V
-12
U15
C12 .1uf
R10 47K
R9 10K
R8 100K
U9
CHARACTER OUTPUT LEVEL
R7 120
TP6
1,3,4 AUDIO GND
BG/MIKE
CHAN 1
CHAN 3
CHAN 4

ITEM	ECN NO	REVISION DESCRIPTION	DATE	APPROVED
A	0456	R2-R6 WAS CHANGED FROM 20K 1% TO 10K 1%	4/6/79	

OUTSTANDING ECNs

NEXT ASSY
USED ON
APPLICATION

MATERIAL

FINISH

DO NOT SCALE DRAWING

DRAWN BY AZTEC
DATE 6-5-79

CHECKED

ENGINEER R.G.Q. 9/24/79

PROJECT ENGINEER

MFG ENGINEER

Pizza Time Theatre Inc
10060 Bubb Road
Cupertino, CA 95014

TITLE
CHARACTER DRIVER

SIZE D
DRAWING NO 08-0004
REV A

SCALE
SHEET 1 OF 1

LIGHT DRIVER BOARD

DESCRIPTION

The Light Driver Board is very similar to the Character Drive Board except it contains no audio switching. It has the same 24V switchable supply, and 16 output lines.

FUNCTION

The Light Driver Board works the same as a Character Driver Board except the last two outut lines of the 16 output lines are also used as outputs. They are lesser power 7406's (U5) because the light driver relays demand less power.

All indicator LED's as on the Character Driver Board have the same function on the Light Driver Boards Q1 (switchable 24V supply) is controlled as before in the Character Driver Board.

PECULIARITIES

The board is address selectable, but usually occupies a -70 or -80 slot.

TEST POINTS

TP1	Ground
TP2	+5V
TP3	Switched +24V

LED DISPLAY

The 16 indicator LED's show the condition of that output line. A lit LED is active or in the on state, indicating that its corresponding light is on.

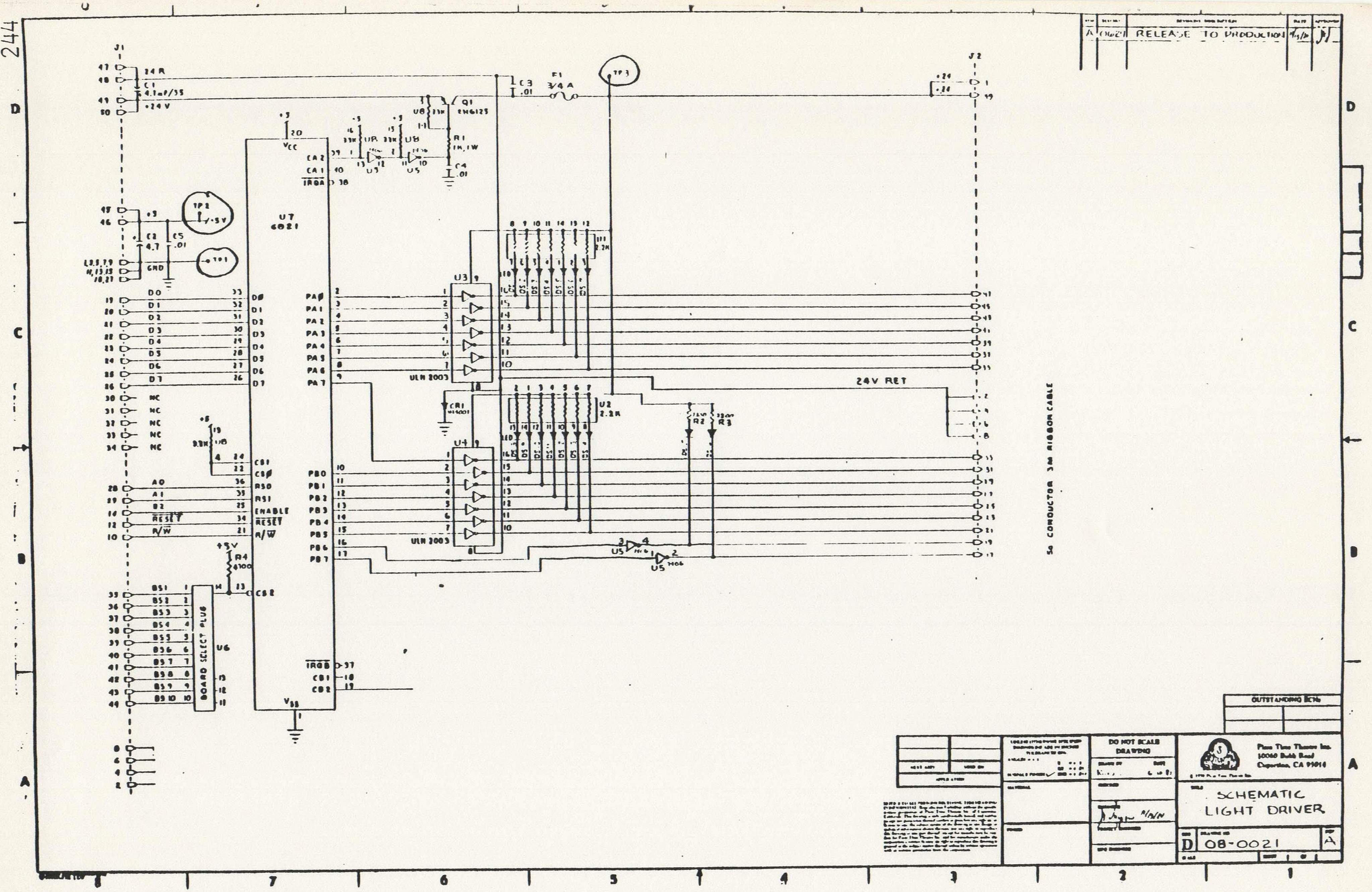

A 0021 RELEASE TO PRODUCTION
J1
J2
C1 4.1uF/35
+24 V
C3 .01
F1 3/4 A
TP3
Q1 2N6125
R1 1K, 1W
C4 .01
U8
U3
U5
U7 6821
VCC
CA2
CA1
IRQA
TP2 +5V
TP1
C2 4.7
C5 .01
GND
D0
D1
D2
D3
D4
D5
D6
D7
NC
CB1
CB0
RS0
RS1
ENABLE
RESET
R/W
A0
A1
A2
R4 4700
+5V
BS1
BS2
BS3
BS4
BS5
BS6
BS7
BS8
BS9
BS10
BOARD SELECT PLUG
U6
CS2
IRQB
CB1
CB2
VSS
PA0
PA1
PA2
PA3
PA4
PA5
PA6
PA7
PB0
PB1
PB2
PB3
PB4
PB5
PB6
PB7
U3
U4
ULN 2003
U1 2.2K
U2 2.2K
CR1
24V RET
R2
R3
50 CONDUCTOR 3M RIBBON CABLE
OUTSTANDING ECNs
DO NOT SCALE DRAWING
Pizza Time Theatre Inc.
10060 Bubb Road
Cupertino, CA 95014
SCHEMATIC
LIGHT DRIVER
D
08-0021
A

6821-P1A

VLN 2003 - Hi-Volt Driver

LUXTROL LIGHT DIMMER SCHEMATIC

LUXTROL light controls of the D5000-B series can be used to control incandescent lighting circuits. Any load up to the full rating of the model used may be connected to the output terminals of the unit as shown (figure 1). MOTOR DRIVE CONNECTIONS are given in (figure 2).

Control voltage (24VDC) from the computer is connected at terminals 4 (-) and 5 (+) of TB1. When 24VDC is applied at these terminals, the motor runs dropping the Lamp Output Voltage to the level preset by the Low Limit Switch. Upon removal of the 24VDC control voltage, the unit will return to the level set by the High Limit Switch (factory set at 117 VAC).

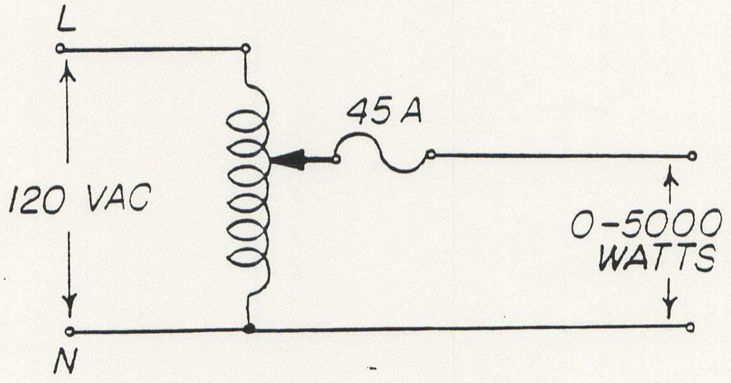

5K DIMMER

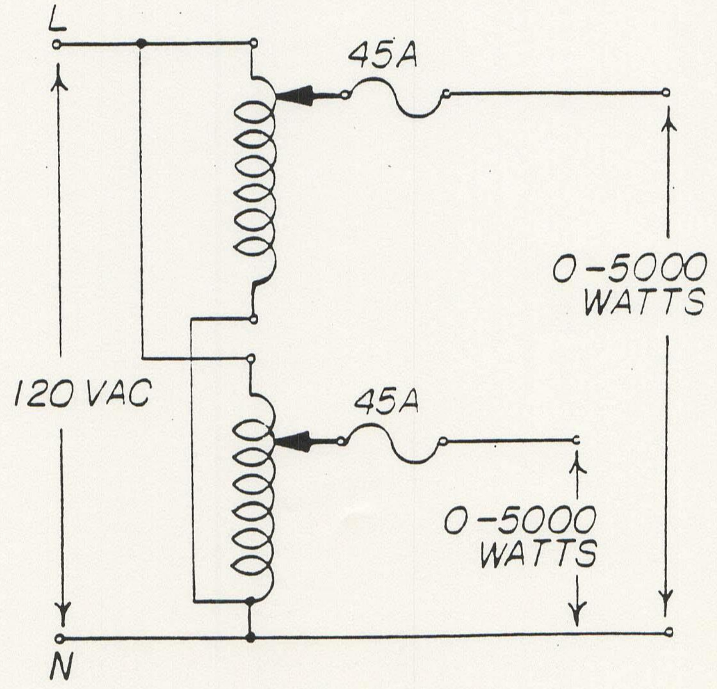

10K DIMMER

Control Console Cont.

TEST

1. Give the CC board a good visual inspection.
2. Plug in the 50 pin connector.
3. Power up, press reset, diag., intro.
4. All CC lamps should light. Push any button and that lamp will go off. Verify that correct correlation is possible.
5. Push reset and all lamps will go off.
6. Push diagnostics.
7. Connect a mike to J2. Press birthday and hold it in.
8. The audio from the control console should be present on "Background" (hold birthday button in).
9. No switching functions are possible if the mic switch is on. This is part of the test, mic switch input is tested and must be verified. Turn switch on (or short J2 pin 3 and 4). All CC lamps will freeze, no switching is possible till the mike is turned off.

CONTROL CONSOLE

DESCRIPTION

The control console allows a cyber system to be remotely operated from the Beverage Center. It duplicates the same commands as the control panel.

Two mic inputs are provided which are combined and sent with the switch data along a 50 conductor flat ribbon cable. The audio is gain adjustable and contains some feedback filtering.

FUNCTION

Op Amp U2 sums the two mic inputs. This amp boosts the gain by X100 and chops off the extremes in frequency. U1 is the line driver which feeds audio to the ribbon cable, it has a gain of X3.

The 9 non-debounced switchable grounds are outputted in parallel fashion. When open they are pulled high by internal pull up registers in Port A of U18 in the CPU card. These switches are mirrored by buffered lamp inputs. These lamps are under total software control.

PECULIARITIES

Different field installations may require more than 2 mic input jacks. The volume pot (R13) is field adjusted.

TEST POINTS

TP1	+5V
TP2	+12V
TP3	-12V
TP4	+12V
TP5	Audio Out
TP6	Ground

LAMP DISPLAY

Nine button buried lamps are driven by software control. If the CPU is not up, they do not work.

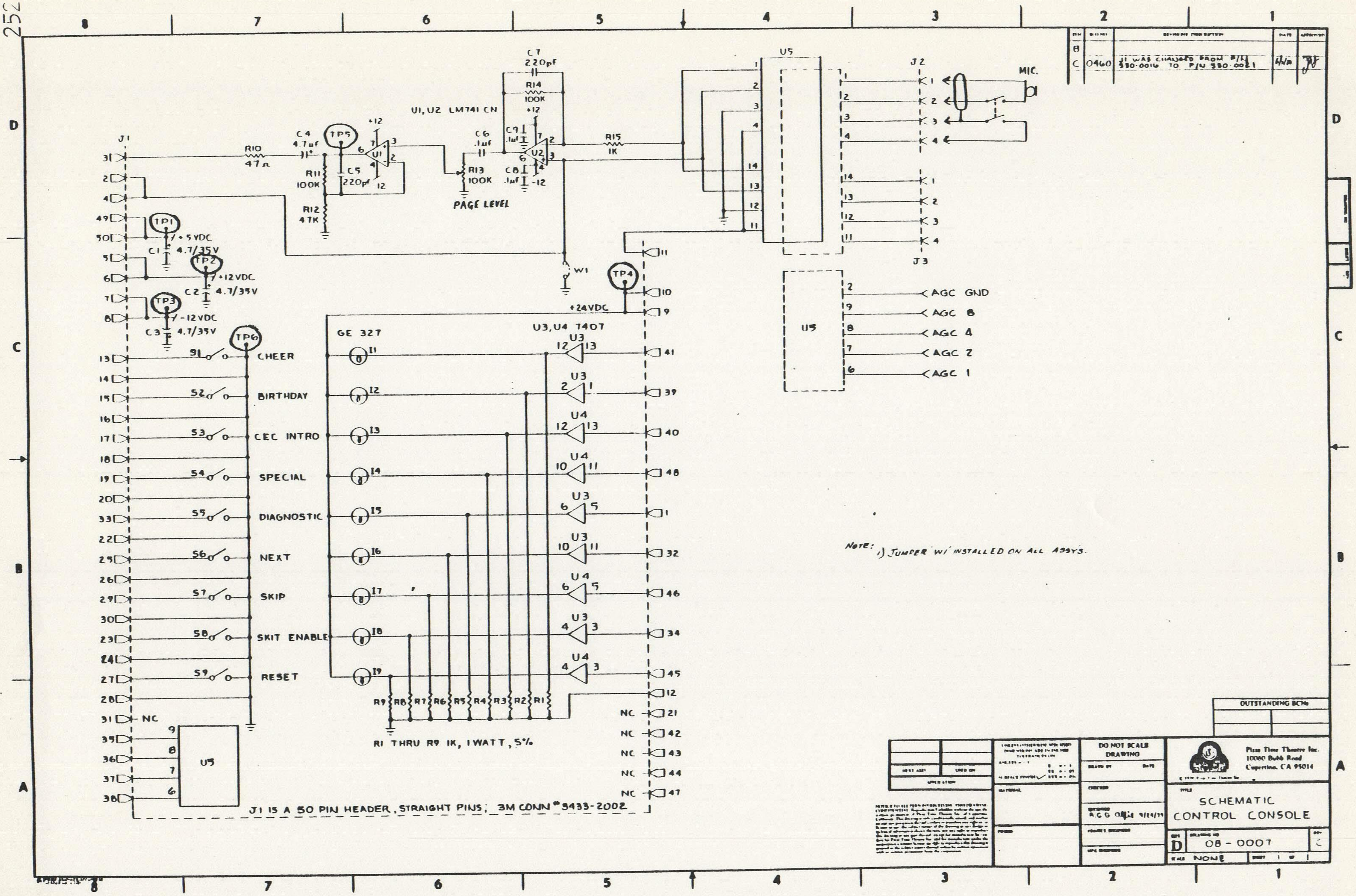
J1
U1, U2 LM741CN
C7 220pf
R14 100K
+12
C4 4.7uf
TP5
R10 47Ω
R11 100K
C5 220pf
R12 47K
-12
C6 .1uf
R13 100K
PAGE LEVEL
C9 .1uf
C8 .1uf
R15 1K
U5
J2
J3
MIC.
TP1
+5VDC
C1 4.7/35V
TP2
+12VDC
C2 4.7/35V
TP3
-12VDC
C3 4.7/35V
W1
TP4
+24VDC
TP6
S1 CHEER
S2 BIRTHDAY
S3 CEC INTRO
S4 SPECIAL
S5 DIAGNOSTIC
S6 NEXT
S7 SKIP
S8 SKIT ENABLE
S9 RESET
GE 327
U3, U4 7407
AGC GND
AGC 8
AGC 4
AGC 2
AGC 1
NC
R1 THRU R9 1K, 1WATT, 5%
J1 IS A 50 PIN HEADER, STRAIGHT PINS; 3M CONN # 3433-2002
NOTE: 1) JUMPER W1 INSTALLED ON ALL ASSY'S.

REV	ECN NO.	REVISION DESCRIPTION	DATE	APPROVED
B				
C	0460	J1 WAS CHANGED FROM P/N 330-0016 TO P/N 330-0021	4/4/80	JF

OUTSTANDING ECNs

NEXT ASSY | USED ON

APPLICATION

DO NOT SCALE DRAWING

DRAWN BY | DATE

CHECKED

ENGINEER
A.G.G. 9/24/79

PROJECT ENGINEER

Pizza Time Theatre Inc.
10000 Bubb Road
Cupertino, CA 95014

TITLE
SCHEMATIC
CONTROL CONSOLE

SIZE D | DRAWING NO 08-0007 | REV C

SCALE NONE | SHEET 1 OF 1

REV	ECO	DESCRIPTION	DATE	APPROVED
B	0518	[illegible]	[illegible]	[illegible]
C	0549	[illegible]	[illegible]	[illegible]
D	0812	[illegible]	[illegible]	[illegible]
E	1150	[illegible]	[illegible]	[illegible]

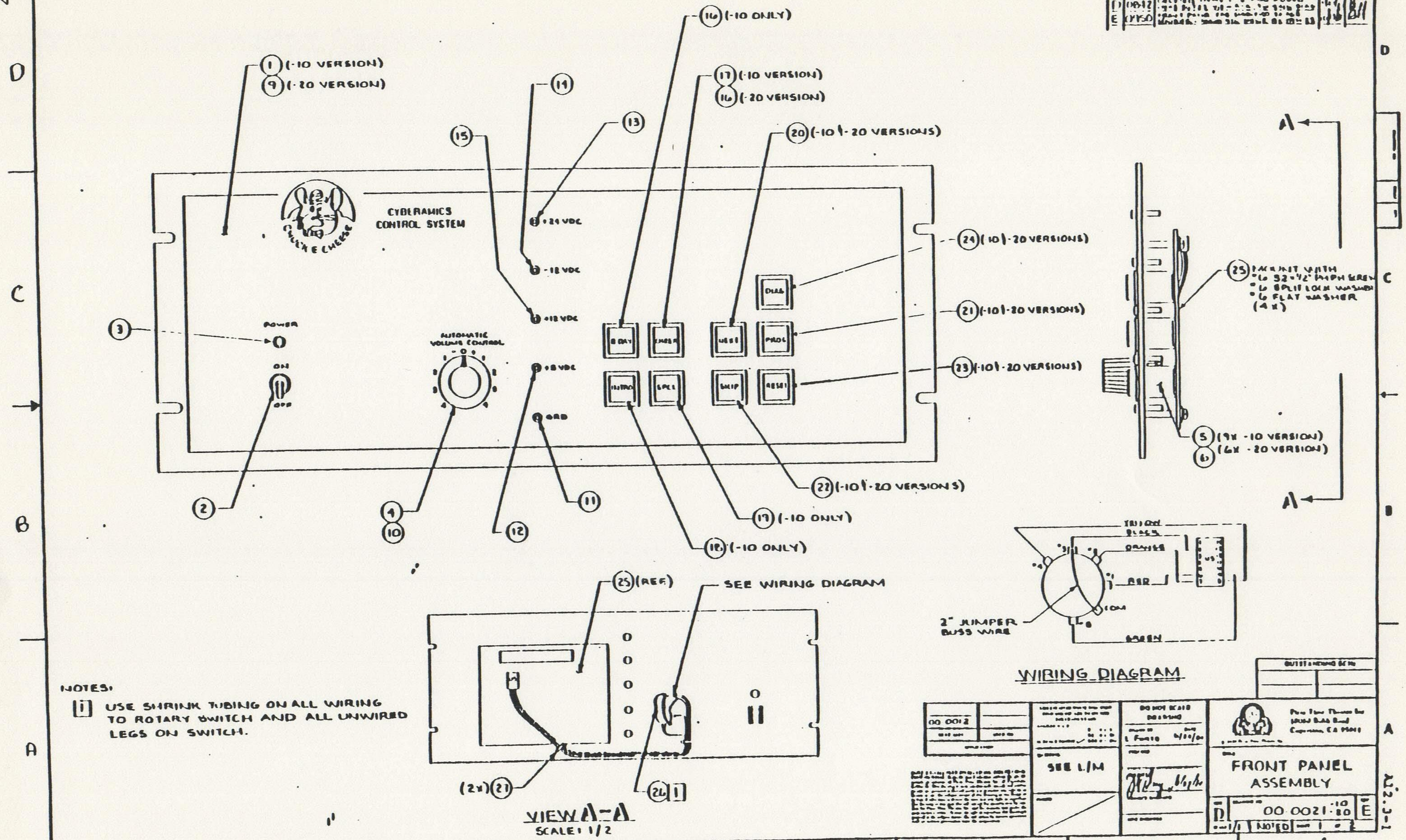
1 (-10 VERSION)
9 (-20 VERSION)
14
13
15
16 (-10 ONLY)
17 (-10 VERSION)
16 (-20 VERSION)
20 (-10 & -20 VERSIONS)
CYBERAMICS CONTROL SYSTEM
CHUCK E CHEESE
+24 VDC
-12 VDC
+12 VDC
+5 VDC
GND
POWER
ON
OFF
AUTOMATIC VOLUME CONTROL
3
2
4
10
12
11
8 DAY
CHECK
NEXT
PROG
DIAG
INTRO
SPELL
SKIP
RESET
24 (-10 & -20 VERSIONS)
21 (-10 & -20 VERSIONS)
23 (-10 & -20 VERSIONS)
22 (-10 & -20 VERSIONS)
17 (-10 ONLY)
18 (-10 ONLY)
A
A
25 PACKNUT WITH
• 6 32 × 1/2" PHPH SCREW
• 6 SPLIT LOCK WASHER
• 6 FLAT WASHER
(4 X)
5 (9X -10 VERSION)
6 (6X -20 VERSION)
25 (REF)
SEE WIRING DIAGRAM
(2X) 27
26 1
VIEW A-A
SCALE: 1/2
YELLOW
BLACK
ORANGE
RED
GREEN
COM
2" JUMPER BUSS WIRE
U5
WIRING DIAGRAM

NOTES:

1. USE SHRINK TUBING ON ALL WIRING TO ROTARY SWITCH AND ALL UNWIRED LEGS ON SWITCH.

00 0012	
SEE L/M	
DO NOT SCALE DRAWING	
DRAWN BY: L Fonte	DATE: 4/10/8

FRONT PANEL ASSEMBLY

D 00 0021 ·10 ·20 E

1/1 NOTED 1 of 2

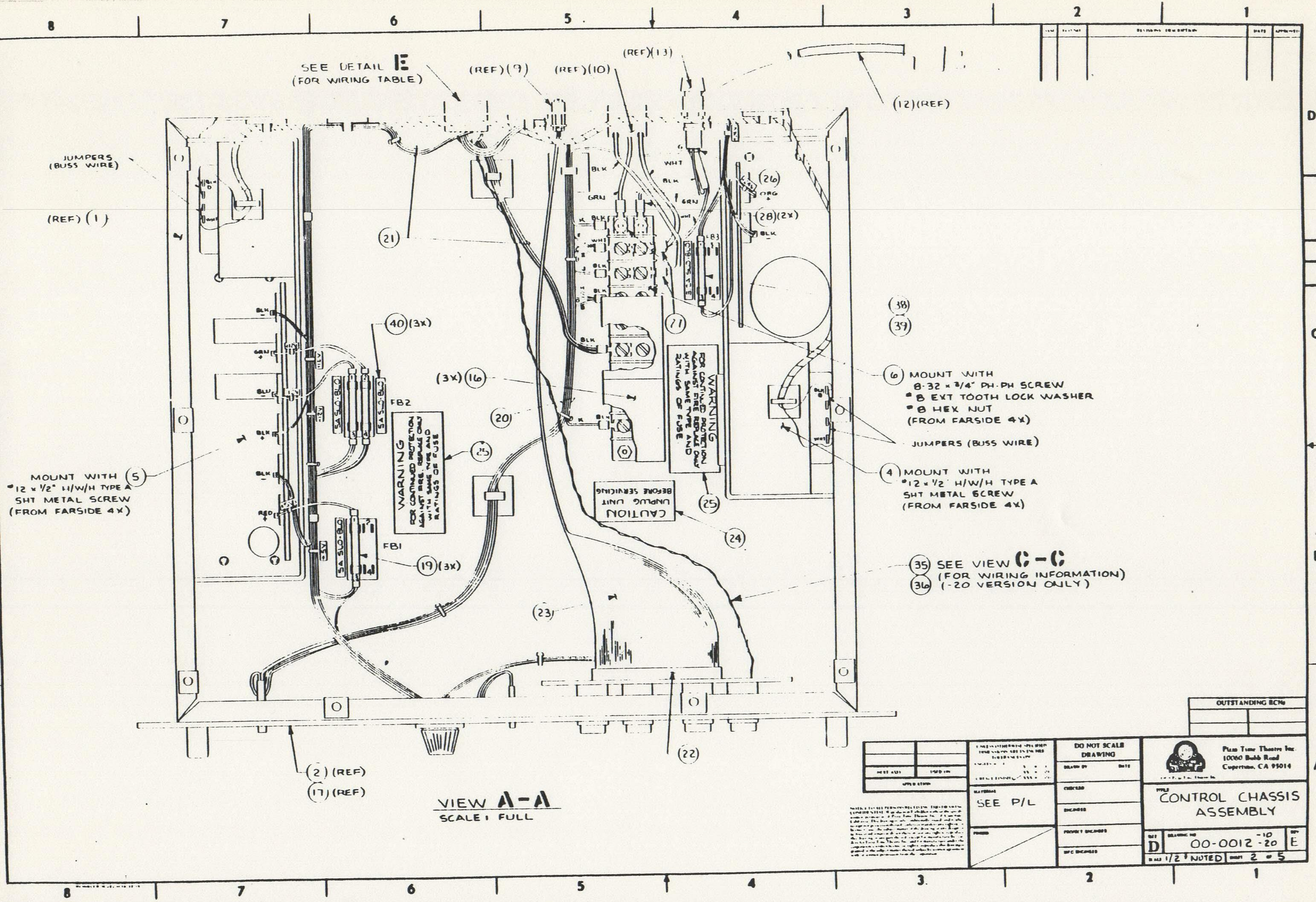
8
7
6
5
4
3
2
1
D
C
B
A
SEE DETAIL E
(FOR WIRING TABLE)
(REF)(9)
(REF)(10)
(REF)(13)
(12)(REF)
JUMPERS
(BUSS WIRE)
(REF) (1)
(21)
BLK
GRN
WHT
BLK
GRN
(26)
ORG
(28)(2X)
BLK
LB3
(38)
(39)
(11)
(40)(3X)
FB2
5A SLO-BLO
5A SLO-BLO
WARNING
FOR CONTINUED PROTECTION AGAINST FIRE REPLACE ONLY WITH SAME TYPE AND RATINGS OF FUSE
(25)
(3X) (16)
(20)
WARNING
FOR CONTINUED PROTECTION AGAINST FIRE REPLACE ONLY WITH SAME TYPE AND RATINGS OF FUSE
(6) MOUNT WITH
8-32 x 3/4" PH-PH SCREW
#8 EXT TOOTH LOCK WASHER
#8 HEX NUT
(FROM FARSIDE 4X)
JUMPERS (BUSS WIRE)
MOUNT WITH (5)
#12 x 1/2" H/W/H TYPE A
SHT METAL SCREW
(FROM FARSIDE 4X)
CAUTION
UNPLUG UNIT
BEFORE SERVICING
(25)
(24)
(4) MOUNT WITH
#12 x 1/2" H/W/H TYPE A
SHT METAL SCREW
(FROM FARSIDE 4X)
BLK
GRN
BLU
BLK
BLK
RED
FB1
(19)(3X)
(35) SEE VIEW C-C
(FOR WIRING INFORMATION)
(36) (-20 VERSION ONLY)
(23)
(22)
(2) (REF)
(17) (REF)

VIEW A-A
SCALE: FULL

OUTSTANDING ECNs

DO NOT SCALE DRAWING

MATERIAL
SEE P/L

Pizza Time Theatre Inc.
10060 Bubb Road
Cupertino, CA 95014

TITLE
CONTROL CHASSIS
ASSEMBLY

SIZE D | DRAWING NO 00-0012 -10 -20 | REV E

SCALE 1/2 NOTED | SHEET 2 of 5

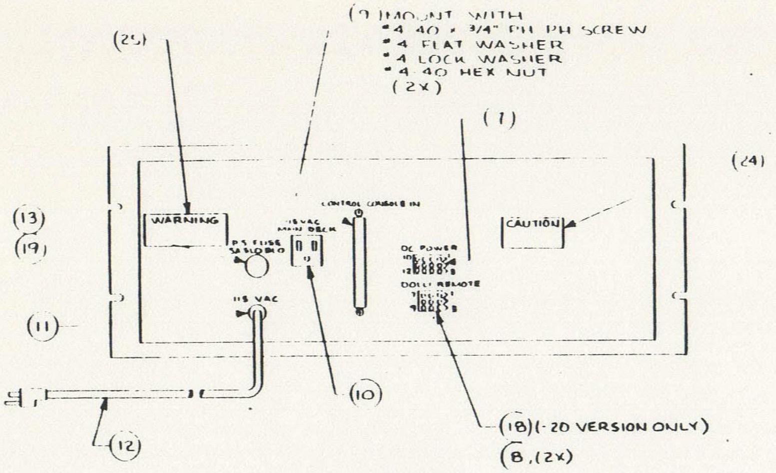
(25)
(?)MOUNT WITH
#4 40 x 3/4" PH PH SCREW
#4 FLAT WASHER
#4 LOCK WASHER
#4 40 HEX NUT
(2X)
(1)
(24)
(13)
(19)
(11)
WARNING
CAUTION
P.S FUSE
115 VAC MAIN DECK
CONTROL CONSOLE IN
DC POWER
DOLLY REMOTE
115 VAC
(10)
(12)
(18)(-20 VERSION ONLY)
(8,(2X)

VIEW **B-B**

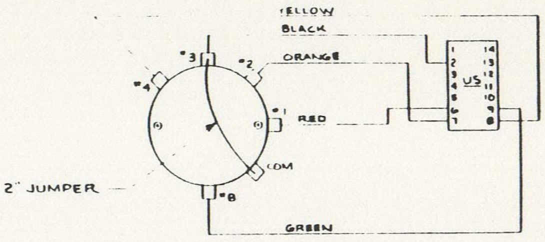
YELLOW
BLACK
ORANGE
RED
GREEN
#3
#2
#4
#1
#8
COM
US
2" JUMPER

DETAIL **D** (REAR VIEW)
SCALE: 2|1

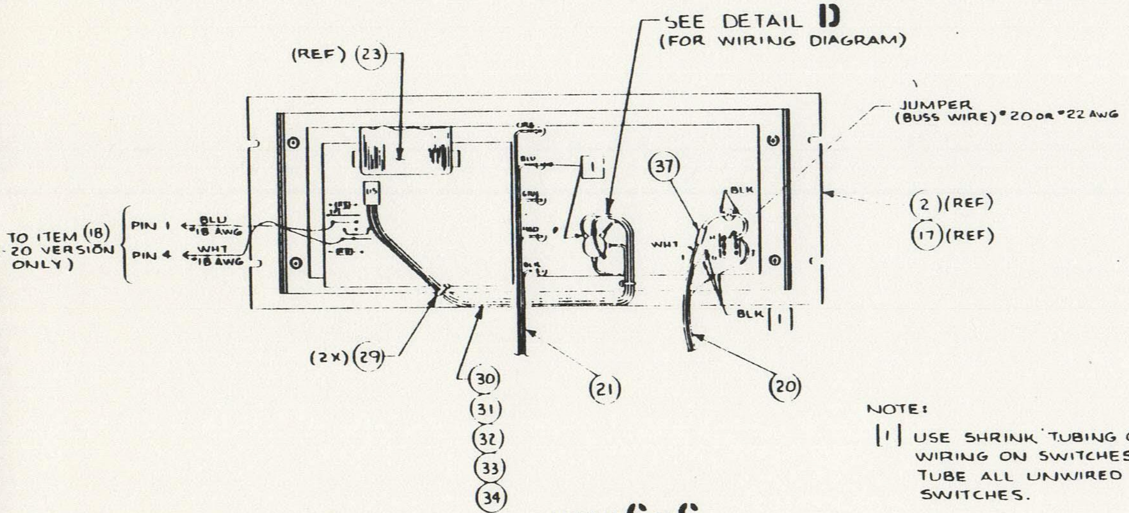
SEE DETAIL D
(FOR WIRING DIAGRAM)
(REF) (23)
JUMPER
(BUSS WIRE) #20 OR #22 AWG
TO ITEM (18)
(-20 VERSION ONLY)
PIN 1 ← BLU / 18 AWG
PIN 4 ← WHT / 18 AWG
(37)
BLK
WHT
BLK [1]
(2)(REF)
(17)(REF)
(2X)(29)
(30)
(31)
(32)
(33)
(34)
(21)
(20)

VIEW **C-C**

NOTE:

[1] USE SHRINK TUBING ON ALL WIRING ON SWITCHES. SHRINK TUBE ALL UNWIRED LEGS ON SWITCHES.

DETAIL **E**

WIRING DIAGRAM FOR ITEM (21) DC HARNESS ASSEMBLY

FROM				TO
PART NUMBER	PIN # - OR TERMINAL POSITION	WIRE COLOR	PART NUMBER	PIN # - OR TERMINAL POSITION
550-0004	5	BLACK	700-0005	+12V (- TERM.)
550-0004	2	GREEN	830-0002	FB2-4
550-0004	8	BLUE	830-0002	FB2-3
550 0004	11	BLACK	700-0005	-12V (+ TERM.)
550-0004	7	BLACK	700-0005	+5V (- TERM.)
550-0004	10	BLACK	700-0005	+5V (- TERM.)
550-0004	1	RED	830-0002	FB1-3
550-0004	4	RED	830-0002	FB1-3
550 0004	3	ORANGE	830-0010	FB3-1
550-0004	6	ORANGE	830-0010	FB3-1
550 0004	12	BLACK	700-0004	+24V (- TERM.)
550-0004	9	BLACK	700-0004	+24V (- TERM.)
700 0005	+12V (- TERM)	BLACK	580-0009	5
700-0005	-12V (+ TERM.)	BLACK	580-0009	5
700-0005	+5V (- TERM.)	BLACK	580-0009	5
700 0004	+24V (- TERM.)	BLACK	580 0009	5
700-0005	+12V (- TERM)	BLACK	TEST POINT	GND
830-0002	FB2-4	GREEN	TEST POINT	+12 VDC
830-0002	FB2 3	BLUE	TEST POINT	-12 VDC
830-0002	FB1-3	RED	TEST POINT	+5 VDC
830-0010	FB3-1	ORANGE	TEST POINT	+24 VDC
830-0002	FB1 1	RED	700-0005	+5V (+ TERM)
830-0002	FB2-1	BLUE	700-0005	-12V (- TERM)
830-0002	FB2 2	GREEN	700-0005	+12V (+ TERM)
830-0010	FB3 3	ORANGE	700-0004	+24V (+ TERM)

DO NOT SCALE DRAWING

MATERIAL
SEE P/L

Pizza Time Theatre Inc.
10060 Bubb Road
Cupertino, CA 95014

TITLE
CONTROL CHASSIS ASSEMBLY

SIZE D DRAWING NO 00-0012 -10 -20 REV E
SCALE 1/2 & NOTED SHEET 3 OF 5

THE ROSETTA

The Rosetta is a chart that tells the header location as well as the movements and functions on the character and light driver boards. To read the chart, start at the left column labeled:

SOL. # (Solenoid) - This is the solenoid on the solenoid board located in the character.

TB #1 (Terminal Block Number One) - This is the number one terminal block on the solenoid board that the solenoids are connected to. There is also a TB 2 on the board and located at the bottom of the TB 1 column on the chart.

Columns three through eight are the character movement columns. Across the top of the columns is the name of the character, the word header, and the header connecting pins on the header chip.

Column ten is the back flood lights.

The last column (eleven) is labeled OPTO. This column indicates the terminals that all the lights are connected to. The terminal strips are located in the light bars in the ceiling.

NOTE: Remember not to short the terminals together (such as 1 & 2, 3 & 4, etc.). The even terminals are always hot with 24VDC. The odd terminals are switched ground. If you want to test a circuit you would read 24VDC between (for example) terminals 1 & 2 if that solenoid is turned on. If it is off you will not read the 24VDC, but should read the 24VDC between terminal 2 of RB 1 and TP1 which is ground.

MAIN STAGE CHARACTERS

SOL#	TB1	CHUCKIE HEADER 1 to 14	JASPER HEADER 2 to 14	PASQUALLY HEADER 3 to 14	MUNCH HEADER 4 to 14	GUEST HEADER 5 to 14	DRUMS HEADER 6 to 14	FRONT LIGHTS HEADER 7 to 14	BACK LIGHTS HEADER 8 to 14	OPTO
L1	1&2	MOUTH	MOUTH	MOUTH	MOUTH	MOUTH	CYMBAL	CLAP	GUEST	1&2
L2	3&4	HEAD LFT.	HEAD LFT.	HEAD LFT.	HEAD LFT.	HEAD LFT.	TRIANGLE	INTRO	CEC BACK	3&4
L3	5&6	HEAD RT.	HEAD RT.	HEAD RT.	HEAD RT.	HEAD RT.	SNARE	PASQUALLY	CEC BACK	5&6
L4	7&8	HEAD TILT	HEAD TILT	HANDS	LFT. ARM	HEAD TILT	BASS	PASQUALLY	CEC BACK	7&8
L5	9&10	EYES RT.	EYES RT.	EYES RT.	EYES RT.	EYES RT.	TAMBORINE	GUEST	JASPER BACK	9&10
L6	11&12	EYE LIDS	EYE LIDS	EYE LIDS	EYE LIDS	EYE LIDS	LG.BLOCK	GUEST	LEFT RED FLAG	11&12
L7	13&14	HAND	HAND	MUSTACHE	RT. ARM	HAND	SM.BLOCK	CHUCK E.	LEFT YELLOW FLAG	13&14
L8	15&16	EYES LFT.	EYES LFT.	EYES LFT.	EYES LFT.	EYES LFT.	BELL	CHUCK E.	LEFT BLUE FLAG	15&16

MAINSTAGE CHARACTERS Cont.

TB2	BIRDS							
1&2	MOUTH	DOORS	DOORS	DIMMER	MED.PAN	CHUCK E.	CENTER RED FLOOD	17&18
3&4	ROCK	STARS		USA	LG. PAN	JASPER	CENTER YELLOW FLOOD	19&20
5&6	CHASER ON	STARS		CONFEDERATE	SM. PAN	JASPER	CENTER BLUE FLOOD	21&22
7&8	CHASE LEFT	DRUM LITE		STATE	CLAP RAZZ	MUNCH	RIGHT RED FLOOD	23&24
9&10	CHASE RIGHT	OCTAL ROCK		CHUCK	CLAP	MUNCH	RIGHT YELLOW FLOOD	25&26
11&12				ITALIAN	ELEPHANT	BIRDS	RIGHT BLUE FLOOD	27&28
						BIRDS	SPARE	29&30
						SPARE	SPARE	31&32

LOUNGE

THE KINGS MAP

SOL#	TB1#	HEADER 1 to 14	HEADER 2 to 14	LIGHT BAR COMMANDS 7 to 14
L1	1&2	MOUTH	FOOT	SPOT CLEAR
L2	3&4	EYES RIGHT	STRUM	SPOT RED
L3	5&6	EYES LEFT	FRET	SPOT BLUE
L4	7&8		LEFT LEG	SPOT RED
L5	9&10	EARS	RIGHT LEG	SPOT AMBER
L6	11&12	HEAD RIGHT	EYELIDS	
L7	13&14	HEAD LEFT		
L8	15&16	HEAD BACK		

TB2#		
1&2	STAGE RIGHT LITE	SIGN
3&4	RIGHT CENTER LITE	TIVOLI
5&6	CENTER LITE	
7&8	LEFT CENTER LITE	
9&10	STAGE LEFT LITE	
11&12	STOOLS	

BEAGLES OR BEACH BOWZERS MAP

SOL#	TB1#	GEORGE FRONT LEFT HEADER 1 to 14	JOHN FRONT RIGHT HEADER 2 to 14	PAUL REAR LEFT HEADER 3 to 14	RINGO REAR RIGHT HEADER 4 to 14
L1	1&2	MOUTH	MOUTH	MOUTH	MOUTH
L2	3&4	BODY	BODY	BODY	BODY
L3	5&6	HEAD RIGHT	HEAD RIGHT	HEAD RIGHT	
L4	7&8	HEAD LEFT	HEAD LEFT	HEAD LEFT	
L5	9&10	HAND	MIKE		LEFT HAND
L6	11&12		FOOT		RIGHT HAND
L7	13&14				
L8	15&16				

TB2#		
1&2	CLEAR SPOT	J
3&4	CLEAR SPOT	
5&6		
7&8		
9&10		
11&12		

CABARET

ARTIE/DOLLI MAP WITH LIGHT BAR

SOL NO. #	TB1#	HEADER 2 to 14	HEADER 3 to 14	LIGHT BAR COMMANDS 7 to 14
L1	1 & 2	MOUTH	BREAST	SPOT #A CLEAR
L2	3 & 4	EYES RIGHT	RIGHT HAND	SPOT #B RED
L3	5 & 6	EYES LEFT	LEFT HAND	SPOT #C BLUE
L4	7 & 8	STOOLS		SPOT #D RED
L5	9 & 10	EARS		SPOT #E AMBER
L6	11 & 12	HEAD RIGHT	EYELIDS	
L7	13 & 14	HEAD LEFT		
L8	15 & 16	HEAD TILT		

TB2#	AC SWITCHER COMMANDS
1 & 2	SPOTLITE
3 & 4	SPOTLITE
5 & 6	
7 & 8	
9 & 10	
11 & 12	

BARBER SHOP QUARTET MAP

SOL#	TB#	IN CHAIR HEADER 1 to 14	WITH CUP HEADER 2 to 14	WITH BROOM HEADER 3 to 14	WITH TOWEL HEADER 4 to 14
L1	1 & 2	MOUTH	MOUTH	MOUTH	MOUTH
L2	3 & 4	BODY	BODY	BODY	BODY
L3	5 & 6	HEAD RIGHT	HEAD RIGHT	HEAD RIGHT	HEAD RIGHT
L4	7 & 8	HEAD LEFT	HEAD LEFT	HEAD LEFT	HEAD LEFT
L5	9 & 10	ARM UP			
L6	11 & 12	ARM RIGHT			
L7	13 & 14	ARM LEFT			
L8	15 & 16				

TB#2	
1 & 2	STAGE RIGHT LIGHT
3 & 4	RIGHT CENTER LIGHT
5 & 6	CENTER LIGHT
7 & 8	LEFT CENTER LIGHT
9 & 10	STAGE LEFT LIGHT
11 & 12	

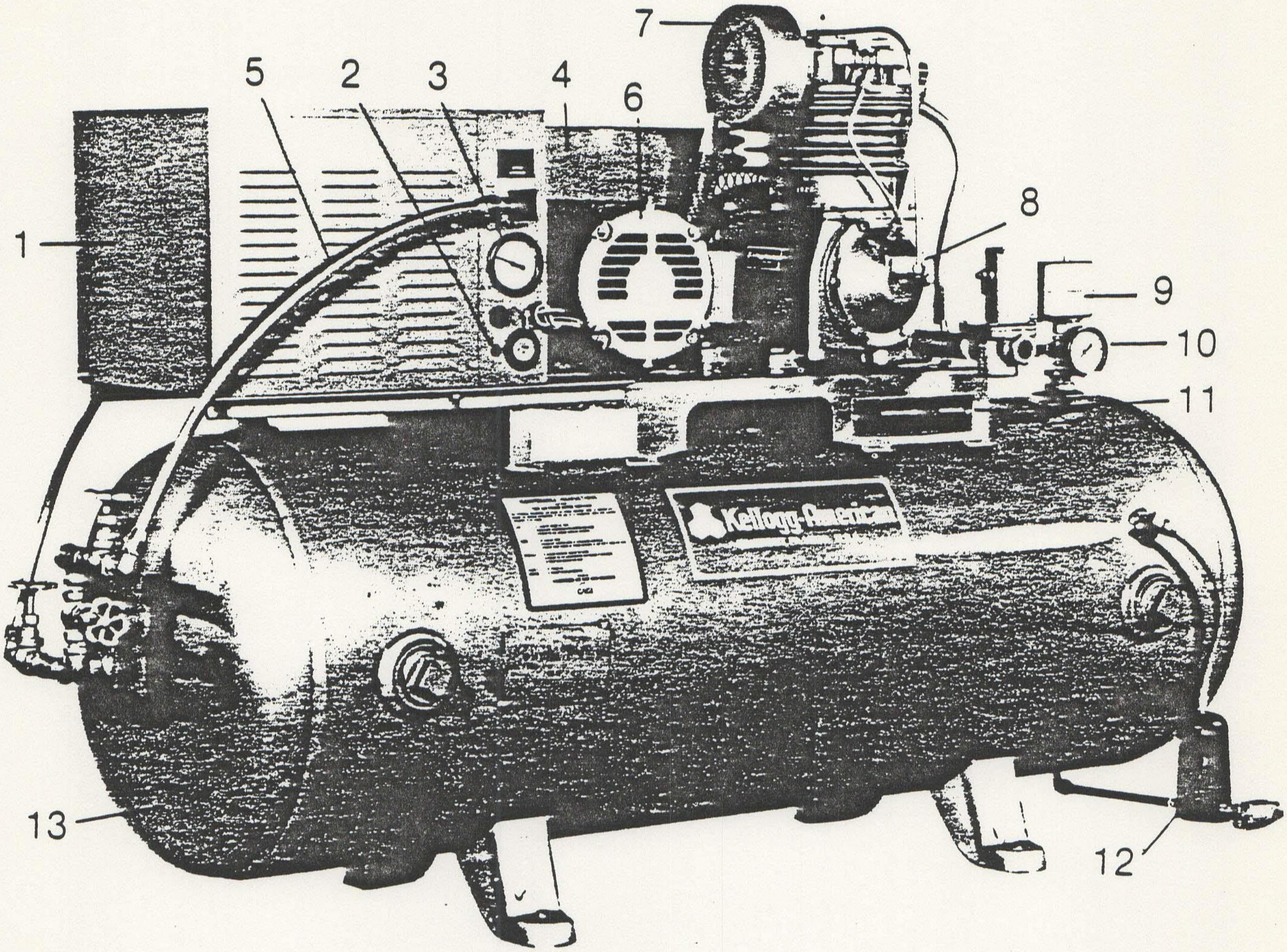

1. Air Dryer
2. Dryer On-Light
3. Refrigerant Pressure Gauge
4. Totally Enclosed Drive Guard
5. Dryer Discharge
6. 5 Horsepower Motor
7. Air In-Let Filter
8. 5 Horsepower Compressor
9. Pressure Switch
10. Air Pressure Gauge
11. Name Plate with Serial Number
12. Auto Tank Drain
13. 80 Gallon Air Receiver

The model 335BA20H is a Kellogg-American self-contained package incorporating a 5 horsepower air compressor and 20 cfm refrigerated air dryer mounted on an 80 gallon air receiver complete with dryer bypassing piping.

TECHNICAL DATA

Air Compressor - Model 335B - 5 horsepower - 208v. 3 phase
Air Delivery - 17 cfm @ 175 psi
Air Dryer - Model A20 - 1/5 horsepower - 115v. single phase
Dryer Capacity - 20 cfm - 35° F pressure dewpoint
Shipping Weight - 720 lbs.
Standard Accessories

- °Compressor low oil control
- °Dryer low ambient control
- °Auto tank drain
- °Auto dryer drain
- °Motor starter switch (furnished separate for remote wall mounting)
- °Totally enclosed belt guard
- °Dryer by-pass piping

Note: also available

Compressor motors and starters for 230V and 460V. - 3 phase power

230V. single phase available at extra cost

Space saving vertical tank mounted units, model 335UBA20H, at extra cost.

Vibration Isolators at extra cost.

To augment existing systems, compressors and dryers are available individually.

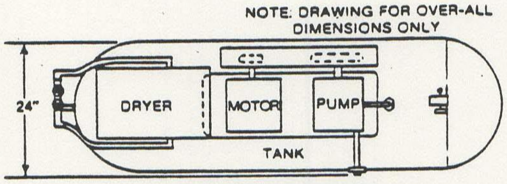
NOTE: DRAWING FOR OVER-ALL DIMENSIONS ONLY
24"
DRYER
MOTOR
PUMP
TANK

TOP VIEW OF COMPRESSOR

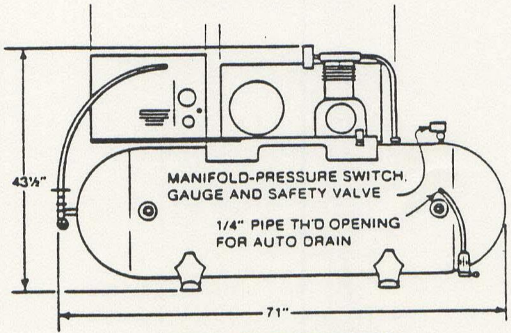
43½"
MANIFOLD-PRESSURE SWITCH, GAUGE AND SAFETY VALVE
1/4" PIPE TH'D OPENING FOR AUTO DRAIN
71"

FRONT VIEW OF COMPRESSOR
HORIZONTAL MODEL 335BA20H

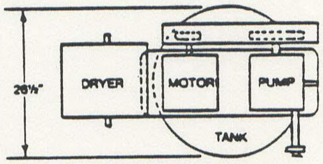
26½"
DRYER
MOTOR
PUMP
TANK

TOP VIEW OF COMPRESSOR

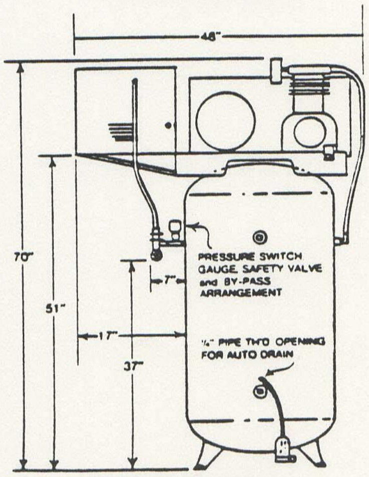
48"
70"
51"
37"
7"
17"
PRESSURE SWITCH GAUGE, SAFETY VALVE and BY-PASS ARRANGEMENT
¼" PIPE TH'D OPENING FOR AUTO DRAIN

FRONT VIEW OF COMPRESSOR
VERTICAL MODEL 335UBA20H

CHECK VALVES - VERTICAL PISTON TYPE

OPERATION AND CARE

A Check Valve is used on automatic switch controlled or centrifugal unloader compressor to seal off the storage tank from the pumping unit and make it possible to relieve pressure from the aftercooler so the motor can start against no pressure load. When the compressor stops running, trapped air rushes out through the automatic switch relief valve piping or the centrifugal unloader outlet for a few seconds until the aftercooler has been drained.

If air continues to escape from that opening while compressor is idle, a leaky check valve is indicated. This condition can prevent the electric motor from starting or cause it to accelerate slowly when current is turned on, thereby damaging the starting mechanism and windings. It is therefore of utmost importance that the check valve be kept in good condition.

Inspect valve at least once month by inserting end of pressure switch relief valve piping in a cup of water or applying soapy water to centrifugal unloader outlet when the compressor is not running. Air bubbles will indicate if the check valve is leaking and if so it should be repaired as follows:

1. Shut off power by means of a hand switch so that motor cannot be started by the automatic switch.
2. Drain all air from the storage tank.
3. Disconnect aftercooler and relief valve piping and remove check valve from tank.
4. Hold hexagon section of body in a vise and unscrew retainer with a pipe wrench.
5. (a) Clean parts thoroughly being sure the small hole in the bottom of retainer is open and that piston moves freely in retainer.

   (b) Re-seat the piston and composition seat by rubbing on very fine (No. 400) emery or sandpaper held on a smooth, flat surface. If badly worn or pitted - replace.
6. Insert spring, piston and seat in retainer and hand tighten retainer to body - then tighten securely with pipe wrench. Using a pencil or similar instrument, make certain piston moves up and down freely.
7. Before installing check valve operate compressor for a few moments, tapping the aftercooler lightly with a wooden stick, to discharge any loose dirt or carbon particles.

Check Valves-Vertical Piston Type Cont.

8. Replace check valve in tank and connect aftercooler and relief valve piping using a small amount of thread sealing compound (e.g. white lead) on the pipe threads.

9. Start motor and let it run until the automatic switch "cuts out" and see that valve is air tight. If valve still leaks, proceed as before paying particular attention to the seating surfaces of the piston and composition seat. A slight leak will usually disappear if compressor is allowed to run through several operating cycles. Gasoline engine driven compressors are equipped with hand operated relief valves instead of the automatic switch type. The manual type valve, located on the side of the check valve body, should be opened while cranking the engine.

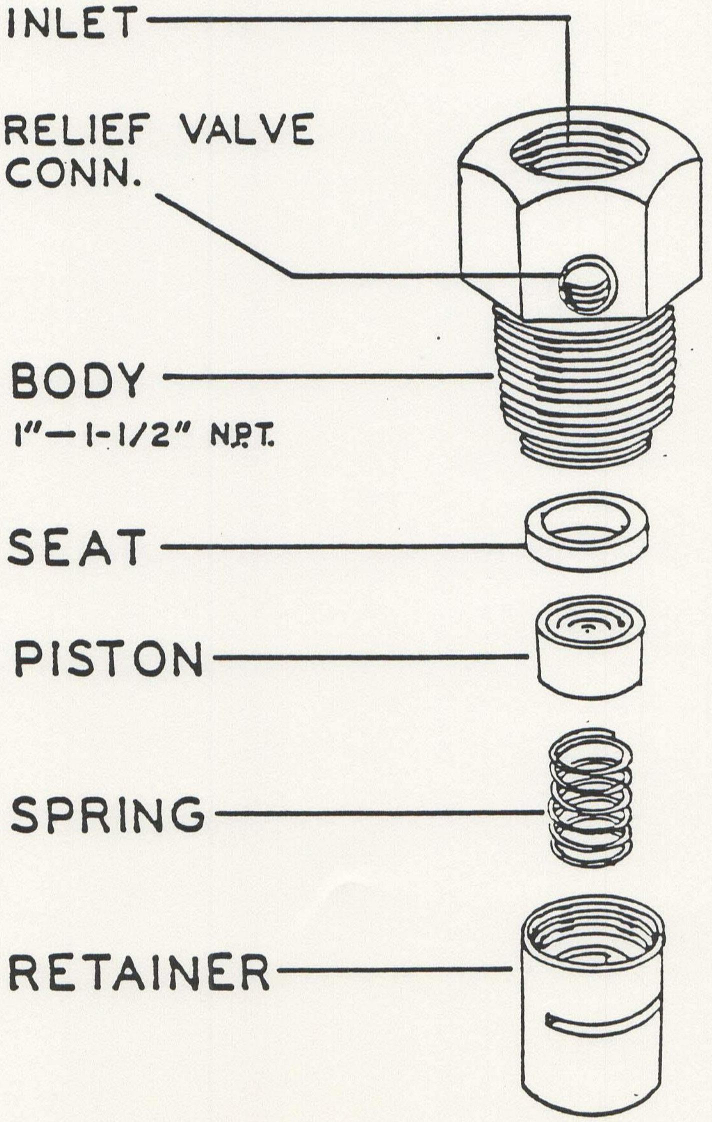

TYPE "K" CHECK VALVE"

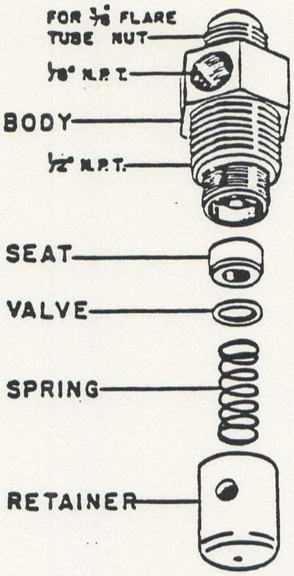

OPERATION AND CARE

The check valve, as used on Automatic Switch Controlled Compressors, seals off the storage tank from the compressor and makes it possible for pressure to be relieved from the compressor allowing it to start under no load.

These valves screw directly into the storage tank and the size refers to the male pipe thread. The inlet of the 1/2" valve is an S.A.E. flare connection to fit a 3/8" tubing nut.

A leaky check valve is indicated by the motor not starting when current is turned on (or delayed starting of motor) and by a continual escape of air from the relief valve pipe (marked "A" on installation sheet) when the compressor is standing idle. Air should escape for several seconds immediately after the compressor stops, but if the check valve is tight, only long enough to drain the aftercooler.

If check valve leaks, repair as follows:

1. Shut off electric supply to motor and drain all air from the storage tank.
2. Disconnect tubing and remove check valve from tank.
3. Holding the hexagon section of the check valve body in a vise, unscrew the spring retainer or guide using a small pipe wrench. The inside of the check valve will then be completely exposed and the fibre disc can be removed with a strong sharp pointed instrument.

Type "K" Check Valve Cont.

4. After cleaning the valve body thoroughly insert the new fiber disc and remove any rough edges by rubbing lightly on very fine emery or sandpaper held on a smooth, flat surface.

5. Examine the steel valve disc and if the surface is found to be rough or distorted, it may be possible to resurface it using very fine emery or sandpaper. Otherwise it will be necessary to replace the disc valve. It is advisable to replace the valve spring since it has probably lost some of its tension after having been in use.

6. Reassemble the valve as follows:
   Place the spring and then the disc valve in the spring guide or retainer, compressing the spring sufficiently to hold the valve in proper position. Then with the valve body still in the vise insert a wooden pin about the size of a match up through the air passage way to hold the valve and spring in position while screwing the retainer into place.

   Be careful not to allow the valve to slip to either side when screwing the retainer into place since it might be caught and damaged between the edge of the retainer and the valve body. The valve should move up and down freely after the retainer has been tightened.

7. The valve should then be installed in the tank and the compressor allowed to pump up to pressure. Check for leaks as outlined above. There should be no escape of air from the tank if valve is seating properly.

AIR AND REFRIGERANT CIRCUITS

Air Circuit

Warm wet compressed air enters the refrigerant air dryer at the inlet port. Here it enters the evaporator or air-to-refrigerant heat exchanger where its temperature is lowered. The condensate (water) generated by the cooling action is collected in the moisture separator and is automatically removed. The air then exits the outlet port.

Refrigerant Circuit

The refrigerant compressor compresses refrigerant vapor to a high pressure and temperature. It then flows through the condenser where it is cooled and forms a liquid. After this it is filtered through the refrigerant strainer-dryer where any traces of moisture and contaminants which may have been introduced during the charging of the compressor unit with refrigerant are removed. It then passes through the refrigerant-to-refrigerant heat exchanger where it is cooled still further. The expansion valve lowers the pressure which in turn lowers the temperature of the liquid refrigerant to approximately 35°F. It remains at this pressure and vaporizes as it flows through the air-to-refrigerant heat exchanger, absorbing heat from the air being dried. The refrigerant then flows back through the refrigerant-to-refrigerant heat exchanger where it is warmed sufficiently to vaporize any remaining liquid refrigerant and the cycle then repeats.

The refrigerant used is R-12. A refrigerant suction pressure gauge (analyzer) is provided as standard equipment on every refrigerant air dryer. For R-12 units, the refrigerant pressure in psig shown on the analyzer gauge closely approximates the refrigerant temperature in closely approximates the refrigerant temperature in °F. The analyzer gauge setting should read between 31 and 34 for these units.

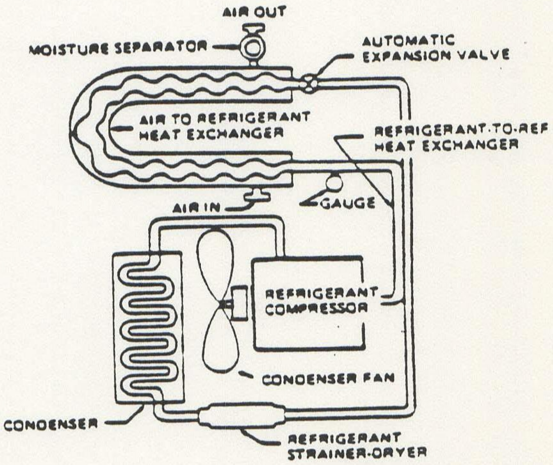
AIR OUT
MOISTURE SEPARATOR
AUTOMATIC EXPANSION VALVE
AIR TO REFRIGERANT HEAT EXCHANGER
REFRIGERANT-TO-REF HEAT EXCHANGER
AIR IN
GAUGE
REFRIGERANT COMPRESSOR
CONDENSER FAN
CONDENSER
REFRIGERANT STRAINER-DRYER

WARNING: These dryers are intended for use only with compressed air at pressures and temperatures within specified limits. They must not be used where pressure or temperature may exceed maximum allowable operating conditions. See Specifications.

Compressed air systems contain high levels of stored energy. Any attempt to connect these products to a system under pressure can lead to serious personal injury. Do not attempt to install, operate or repair these products unless you are trained in the proper techniques of working on fluid power systems, or are under competent supervision.

Air & Refrigerant Circuits Cont.

Through misuse, age, or malfunction these dryers can fail in modes which will substantially reduce or eliminate any flow of air from the outlet port. The user is warned to consider these failure modes in the design of equipment utilizing these dryers and to provide all appropriate safeguards to prevent personal injury or property damage in the event of such failures.

The user of these products is cautioned to conform to all applicable electrical, mechanical, and other codes in the installation and operation of these products.

INTERIOR VIEW

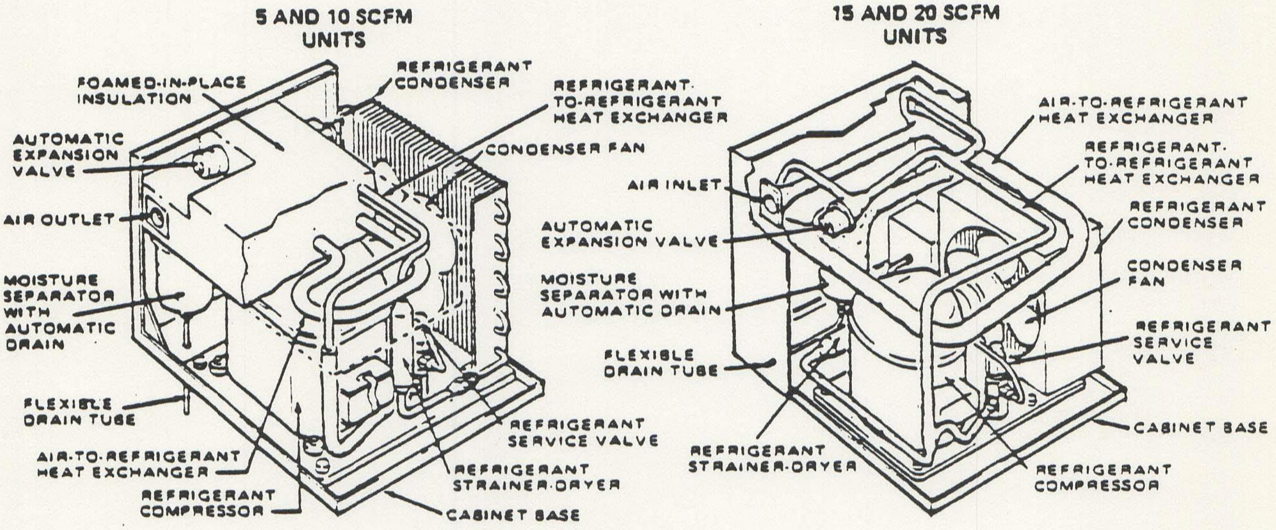

5 AND 10 SCFM UNITS

15 AND 20 SCFM UNITS

FOAMED-IN-PLACE INSULATION
REFRIGERANT CONDENSER
REFRIGERANT-TO-REFRIGERANT HEAT EXCHANGER
AUTOMATIC EXPANSION VALVE
CONDENSER FAN
AIR OUTLET
MOISTURE SEPARATOR WITH AUTOMATIC DRAIN
FLEXIBLE DRAIN TUBE
AIR-TO-REFRIGERANT HEAT EXCHANGER
REFRIGERANT COMPRESSOR
REFRIGERANT SERVICE VALVE
REFRIGERANT STRAINER-DRYER
CABINET BASE
AIR-TO-REFRIGERANT HEAT EXCHANGER
REFRIGERANT-TO-REFRIGERANT HEAT EXCHANGER
AIR INLET
REFRIGERANT CONDENSER
AUTOMATIC EXPANSION VALVE
CONDENSER FAN
MOISTURE SEPARATOR WITH AUTOMATIC DRAIN
REFRIGERANT SERVICE VALVE
FLEXIBLE DRAIN TUBE
CABINET BASE
REFRIGERANT STRAINER-DRYER
REFRIGERANT COMPRESSOR

ELECTRICAL CIRCUIT

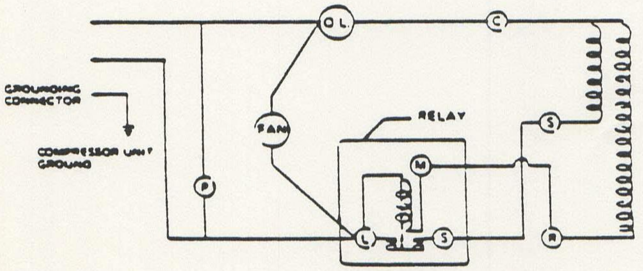

GROUNDING CONNECTOR
COMPRESSOR UNIT GROUND
O.L
C
FAN
RELAY
S
M
P
L
S
R

Legend

P – Power-on Light (On 15 and 20 scfm models only)
O.L. – Overload
C – Common
S – Start
R – Run

REFRIGERATED COMPRESSED AIR DRYERS

Operation and Maintenance Instructions

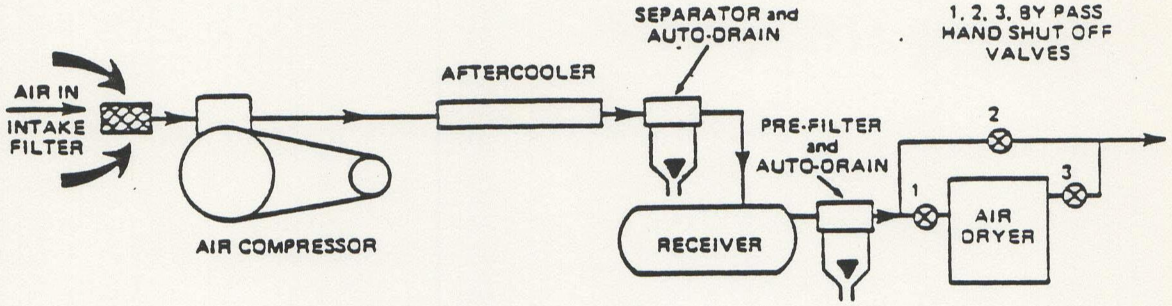

OPERATION

These air dryers are continuous running, noncycling refrigerant type dryers utilizing an R-12 or R-22 refrigerant circuit to dry warm, wet compressed air for compressed air usage. The noncycling design of these dryers assures proper dewpoint control at all times. The refrigerant compressor and condenser run continuously when power is applied to the dryer. These units are designed to provide a 33°F to 39°F pressure dewpoint at rated flow when operated under the following conditions:

Inlet air temperature:	100°F (Saturated air)
Inlet air pressure:	100 psig
Ambient air temperature:	100°F

Each unit is equipped with an automatic drain trap within the moisture separator or an externally mounted drip leg drain for automatic expulsion of condensate. In addition, a refrigerant suction pressure. Each unit is equipped with a commercial quality condensing unit. Cabinet design permits easy access to all components as well as electrical terminals. Under normal operating conditions, the air dryer will run continuously when power is "on". The dryer will provide compressed air at the rated pressure dewpoint within the rated operating conditions.

OPERATING CONDITIONS

Units are designed for entering air at 100°F. If the temperature of entering air is to be greater than 100°F, the factory should be consulted to determine the permissible air flow through the unit.

NOTE: The increased heat content of higher temperature requires the dryer to be oversized to prevent overloading of the refrigerant compressor.

The allowable range for ambient temperature is 50°F, frost or icing will develop and at temperatures above 110°F, refrigeration capacity will decrease.

MAINTENANCE

Normally, very little maintenance should be required. When first analyzing a refrigerant dryer problem make certain that the refrigerant analyzer gauge reading is within the specified limits of 31 to 36 psig on units up to 400 SCFM and 55 to 65 psig on units 500 to 2000 SCFM. This pressure can be adjusted by turning the slotted adjusting screw on the expansion valve on units 5 through 250 SCFM or the hot gas by-pass valve on units 400 SCFM and larger. The expansion valve and hot gas by-pass valve operate like a pressure regulator. Turn the adjusting screw clockwise to increase and counterclockwise to decrease refrigerant pressure. Allow 15 minutes between adjustments (with air flowing though the dryer) for the pressure to stabilize. refrigerant pressure below specified limits may cause the dryer to freeze up, restricting air flow. Refrigerant pressures above specified limits will provide a higher dewpoint and may allow water condensation to occur downstream.

NOTE: If the unit cannot be adjusted, contact a qualified refrigeration specialist. If the unit is under warranty, notify the factory or authorized distributor. Provide the serial and model numbers of the dryer.

On most units the refrigerant analyzer gauge is connected to the refrigerant charge valve. This facilitates changing damaged gauges by simply removing the charge valve cover and turning the adjusting stem in a counterclockwise direction. This turns off the refrigerant pressure to the gauge and permits removal and installation of a new gauge with minimal effort. Turn on refrigerant pressure by turning adjusting stem in a clockwise direction.

A potential problem area which should be investigated if proper dewpoint is not being achieved is whether or not the refrigerant compressor is operating properly. It is possible for the fan to be operating, but not the compressor.

Make certain that both compressor and fan are functioning. To check if the compressor is running, see if suction pressure is at correct value. If compressor is not running and "power-on" light is "off", check for an open circuit ahead of dryer.

If compressor is not running and "power-on" light is "on" this indicates failure of compressor or compressor controls. A qualified refrigeration specialist should be contacted, or if unit is in warranty, notify the factory. These units are of a non-cycling design. If you find that the compressor is cycling, electric power to the unit should be shut off and a qualified refrigeration specialist should be contacted or if the unit is under warranty, notify the factory.

Excessive water downstream may indicate an inoperative drain. The moisture separator on these units utilizes our automatic drain which can easily be serviced by reducing the air pressure to zero and then unscrewing the bowl. The insulation between the filter body and bowl

Maintenance Cont.

has been separated to eliminate the need of cutting the insulation. The separator is actually a filter which does not contain a filter element. An element should not be used. Malfunctioning automatic drains should be replaced with new automatic drain assemblies, part number 3000-10. This procedure is also used to service an externally mounted drip leg drain on larger units.

The following is a table of various problems that may occur during the course of dryer operation, possible causes and recommended repair procedures.

MAIN STAGE PNEUMATICS

After the clean dry air has left the air dryer it goes to at least three, and maybe four, different places. It will go to the birthday balloon blow-up area which should be regulated to 5 psi and the Wac-A-Munch machine which should be regulated to 15 psi. The main function of the compressed air is to operate the characters. You have main stage characters with a mainstage filter/regulator that is set at 60 psi and, if you have cabaret characters, their main regulator is also set at 60 psi.

The 60 psi is the supply air to the stage and is regulated down at the characters. The air will pass through a filter condensation bowl at each character then will be regulated for high pressure use at 27 psi on one regulator and low pressure at 8 psi on the other regulator. These regulators are located on the characters and can be checked with an external gauge.

After the air has been regulated it will go on to the solenoid board. The solenoid board receives signals from the character driver boards to turn on or off the solenoids. When the solenoid turns on it allows the air to flow to the selected cylinder if it is a signal acting cylinder, meaning that air pressure moves the cylinder one way and spring action moves it in the opposite direction.

If the cylinder is the double acting type, the solenoid will direct the air flow to a four-way valve mounted on the character or character base. The air from the solenoid will enter the four-way valve at Port "CA" (control air) and push the plunger against spring tension to allow the supply air to flow from Port "P" (large port) through Port "A". This is the air that will move the cylinder in one direction. At the same time, the air that was in the cylinder will be exhausted through Port "EB" (Exhaust "B"), the exhaust ports have a small filter type muffler attached.

When the solenoid is shut off the spring tension in the four-way valve will push the internal piston back towards the "CA" Port allowing the always present supply air at Port "P" to flow through Port "B" to push the cylinder in the opposite direction. At the same time, the air that was in the cylinder will be exhausted through Port "EA" (Exhaust "A").

With the exception of the mouth cylinder, all the cylinders in the characters are sealed, self-lubricating "BIMBA" cylinders. They cannot be rebuilt, but are guaranteed for one million cycles. The mouth cylinders will require maintenance and rebuilding, which has been covered in Character Maintenance.

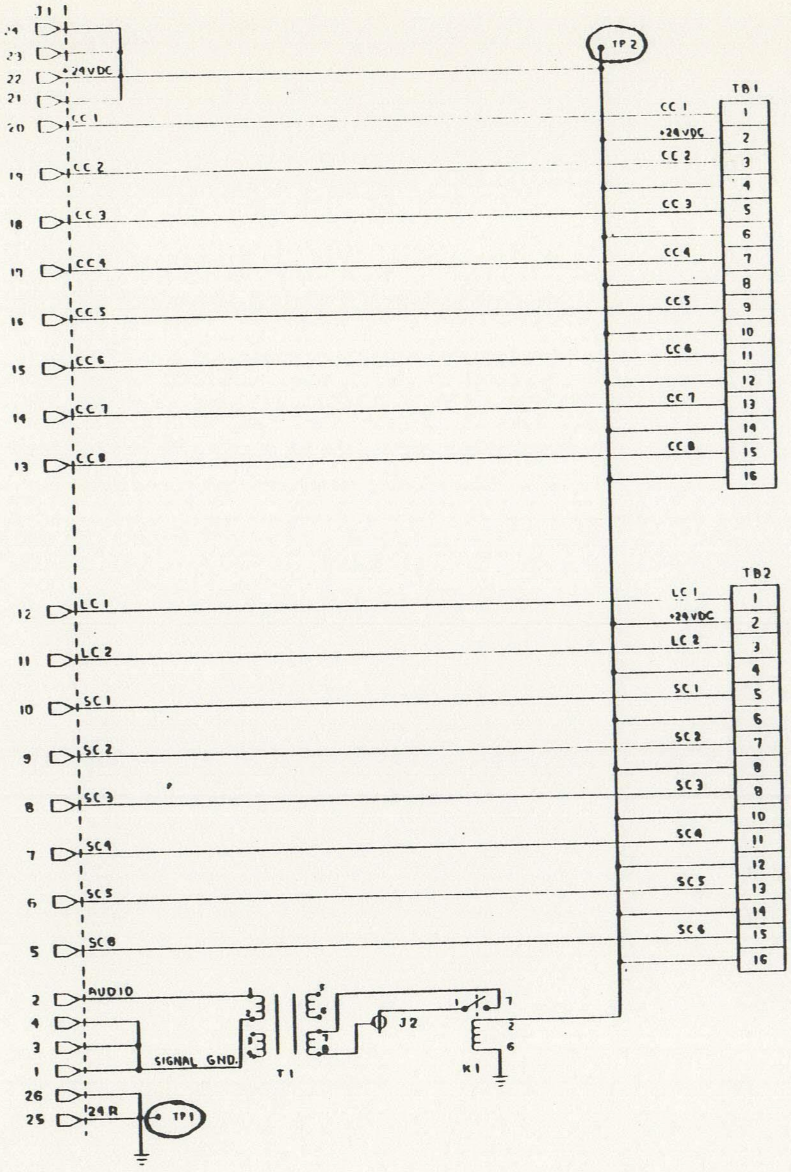
J1
24
23
22
21
+24VDC
TP2
20
CC1
19
CC2
18
CC3
17
CC4
16
CC5
15
CC6
14
CC7
13
CC8
TB1
CC1
+24VDC
CC2
CC3
CC4
CC5
CC6
CC7
CC8
1
2
3
4
5
6
7
8
9
10
11
12
13
14
15
16
12
LC1
11
LC2
10
SC1
9
SC2
8
SC3
7
SC4
6
SC5
5
SC6
TB2
LC1
+24VDC
LC2
SC1
SC2
SC3
SC4
SC5
SC6
1
2
3
4
5
6
7
8
9
10
11
12
13
14
15
16
2
AUDIO
4
3
1
SIGNAL GND.
T1
J2
K1
1
7
2
6
26
25
24R
TP1

OUTSTANDING ECNs

DO NOT SCALE
DRAWING

Pizza Time Theatre Inc.
10060 Bubb Road
Cupertino, CA 95014

AGG 9/14/81

SCHEMATIC
SOLENOID BOARD

D 08-0005 A

GAMES

GAMES

JOB OBJECTIVE:

Upon completion of training, the Technical Manager will be able to:

TASKS	PREPARATION	COMPLETED
I. State and demonstrate the duties and responsibilities of the Assistant Technician.	Section 3 Pages 1-3	
II. State and demonstrate the duties and responsibilities of the Game Room Attendant.	Section 3 Pages 4-6	
III. State and demonstrate the importance of game preventive maintenance.	Section 3 Pages 7-8	
IV. State and demonstrate the cleaning and maintenance of Billy Bob's space station.	Section 3 Page 9	
V. State and demonstrate the cleaning and maintenance of the pinball game.	Section 3 Pages 10-23	
VI. State and demonstrate the cleaning and maintenance of the video game.	Section 3 Pages 24-26	
VII. State and demonstrate the cleaning and maintenance of the arcade games.	Section 3 Pages 27-28	
VIII. State and demonstrate the cleaning and maintenance of the skill games.	Section 3 Pages 29-34	
IX. State and demonstrate the operation and maintenance of the two types of coin mechanisms.	Section 3 Pages 35-51	
X. State and demonstrate the operation and adjustment of game power supplies.	Section 3 Pages 52-53	

GAMES Cont.

TASKS	PREPARATION	COMPLETED
XI. State and demonstrate the operation, cleaning, and adjustment of the video monitor.	Section 3 Pages 54-69	________
XII. State and demonstrate proper troubleshooting procedures for games.	Section 3 Pages 70-97	________

Regional Technical Trainer

Date: ____________________

Technical Manager

Date: ____________________

ASSISTANT TECHNICIAN

1. The Assistant Technician is to assist the Technical Manager in all technical areas. At times he/she will be totally in charge of performing all preventative maintenance on games and the animation.

2. He/she will also aid in the area of training Game Room Attendants on proper procedures for game room cleaning. Cleaning all types of games and kiddie rides.

3. Train Game Room Attendants in the proper way to clear and adjust a coin mechanism, how to change bulbs in our many games and rides, how to check a fuse by looking at it and how to replace it.

4. Assist our Attendants in keeping ticket dispensers, balloon, and egg machines full. Assist in balancing the skee-ball machines.

5. Assist our guests by token refunds because of a malfunctioning game. Show the guest how to play some of the more complicated games. Keep a close eye out for our younger guests' safety and assist when necessary.

6. Keep the Tech room clean and organized. Help the Technical Manager by maintaining a parts inventory for the show and the games. Help maintain an ongoing safety program.

7. Watch out for the security of our show and games. If one of these areas are being abused by a guest he/she will try to deal with it or contact a member of the management team. Remember that he/she is responsible to all members of the management team.

ASSISTANT TECHNICIAN

Duties

1. Clean the game room
   - a. Keep equipment exteriors free of fingerprints and dust.
   - b. Keep floor free of debris and trash.
   - c. Keep dining tables and chairs bussed and clean.
   - d. Keep ashtrays and cup holders free of paper trash at all times; empty butts, etc., daily at minimum.
   - e. Clean up food/beverage spills immediately to prevent staining and further tracking.
2. Perform preventative maintenance
   - a. Check assigned preventative maintenance schedule each day.
   - b. Refer to appropriate job aid.
   - c. Perform the required tasks.
   - d. Notify the Technician of completion and/or discrepancies.
3. Provide security of games
   - a. Watch for abuse of games.
   - b. Prevent abuse in a courteous manner.
   - c. Notify any member of management of continued abuse and all unusual situations or suspicious persons.
   - d. Be alert and visible at all times.
   - e. Greet each guest verbally and with eye contact.
   - f. Routinely examine all machine doors and locks.
   - g. Avoid being sidetracked or monopolized by a guest (decoys/diversions).
4. Provide assistance to guests
   - a. Provide refunds as required in cases of a malfunction.
   - b. Offer assistance in game procedures and positively comment on the guest's scores.
   - c. Help create and maintain a "fun" atmosphere through personal contact with the guests.
   - d. Above all, be friendly and courteous at all times.
   - e. Suggest alternative games for those waiting for a particular game.
   - f. Always make yourself visible and available to assist a guest.
   - g. Do not forget that the children are our very special guests.

5. Repair or report malfunctioning games.
    - a. Check coin return and mechanism.
    - b. Check start button.
    - c. Check power cord.
    - d. Check on and off switch.
    - e. Check interlock switches on inside of doors.
    - f. If unable to activate the game:
        1. Direct guest to another game of their choice and activate with a test token.
        2. If a technician is not available, remove the game from the floor unless it is too large to remove such as Skeeball, Knockdown, etc.
        3. Document the problem for the technician's attention.

6. Skeeballs (Skeerolls) and all other ticket dispensing machines
    - a. Monitor accuracy of machine ticket dispensers.
    - b. Assure adequate supply of tickets in machines by observing control lights.
    - c. Assure proper "balancing" of skeeball machines, as many times as necessary. There should be a minimum of 10 balls in each machine and a maximum of 12.
    - d. Monitor methods of play as they relate to safety and security.
    - e. Direct guests to the Merchandise area for ticket redemption.

7. Maintain strict adherence to all policies and rules
    - a. Notify any member of management if guest problems occur.
    - b. Abide by the dress code and rules of conduct.

8. Be safety minded at all times
    - a. Be alert for situations which could result in an accident.
    - b. Kiddie rides must only be used by children, and in the manner for which they are intended and constructed.
    - c. Horseplay; correct situations in which overzealous guests may harm themselves, others or the equipment.

RELATIONSHIPS

1. The Assistant Technician reports directly to the Technician.

2. Assistance and cooperation with other personnel will be required periodically.

GAME ROOM ATTENDANTS

1. Keep the game room clean by keeping the trash and spills picked up, and vacuum when necessary.

2. Provide security for the games by watching for abuse. Prevent abuse in a courteous manner and notify a member of management of any continued abuse.

3. Provide assistance to our guests by providing refunds as required in cases of a malfunction. Offer assistance in how to operate a game. Watch out for the safety of our young guests. If you have a lost child on your hands, entertain that child with a FREE ride or a FREE balloon while their lost parents are being found.

4. Maintain the cleanliness of our games by wiping down the exteriors of the games, keeping the glasses clean, and making sure that burned out bulbs are replaced.

5. Minor problems with games can sometimes be corrected without the assistance of a Technician. If a game is not working and he/she cannot fix it, or a Technician is not available, remove the game from the floor.

6. Remembering little things can keep our guests very happy. Remember to keep all ticket dispensers, balloon, and egg machines full. Make sure that the skee-ball lanes are balanced with at least ten balls each.

GAMEROOM ATTENDANT

Duties

1. Clean the game room
    a. Keep equipment exteriors free of fingerprints and dust.
    b. Keep floor free of debris and trash.
    c. Keep dining tables and chairs bussed and clean.
    d. Keep ashtrays and cup holders free of paper trash at all times; empty butts, etc., daily at minimum.
    e. Clean up food/beverage spills immediately to prevent staining and further tracking.

2. Perform preventative maintenance
    a. Check assigned preventative maintenance schedule each day.
    b. Refer to appropriate job aid.
    c. Perform the required tasks.
    d. Notify the Technician or Assistant Technician of completion and/or discrepancies.

3. Provide security of games
    a. Watch for abuse of games.
    b. Prevent abuse in a courteous manner.
    c. Notify any member of management of continued abuse and all unusual situations or suspicious persons.
    d. Be alert and visible at all times.
    e. Greet each guest verbally and with eye contact.
    f. Routinely examine all machine doors and locks.
    g. Avoid being sidetracked or monopolized by a guest (decoys/diversions).

4. Provide assistance to guests
    a. Provide refunds as required in cases of a malfunction.
    b. Offer assistance in game procedures and positively comment on the guest's scores.
    c. Help create and maintain a "fun" atmosphere through personal contact with the guests.
    d. Above all, be friendly and courteous at all times.
    e. Suggest alternative games for those waiting for a particular game.
    f. Always make yourself visible and available to assist a guest.
    g. Do not forget that the children are our very special guests.

5. Repair or report malfunctioning games.
   - a. Check coin return and mechanism.
   - b. Check start button.
   - c. Check power cord.
   - d. Check on and off switch.
   - e. Check interlock switches on inside of doors.
   - f. If unable to activate the game:
     1. Direct guest to another game of their choice and activate with a test token.
     2. If a technician is not available, remove the game from the floor unless it is a Skeeball or Wack-A-Demon.
     3. Document the problem for the technician's attention.

6. Skeeballs (Skeerolls) and all other ticket dispensing machines
   - a. Monitor accuracy of machine ticket dispensers.
   - b. Assure adequate supply of tickets in machines by observing control lights.
   - c. Assure proper "balancing" of skeeball machines, as many times as necessary. There should be a minimum of 10 balls in each machine and a maximum of 12.
   - d. Monitor methods of play as they relate to safety and security.
   - e. Direct guests to the Merchandise area for ticket redemption.

7. Maintain strict adherence to all policies and rules
   - a. Notify any member of management if guest problems occur.
   - b. Abide by the dress code and rules of conduct.

8. Be safety minded at all times
   - a. Be alert for situations which could result in an accident.
   - b. Kiddie rides must only be used by children, and in the manner for which they are intended and constructed.
   - c. Horseplay; correct situations in which overzealous guests may harm themselves, others or the equipment.

RELATIONSHIPS

1. The Game Room Attendant reports directly to the Technician or Assistant Technician.

2. Assistance and cooperation with other personnel will be required periodically.

PREVENTATIVE MAINTENANCE OF GAMES

A. Schedule of maintenance

1. Pinballs should be serviced once a week.
2. Video games should be serviced once a month.
3. Arcade pieces should be serviced once a week.
4. Kiddie Rides should be serviced daily.

B. Common component failures in games

1. The most common failures in pinball games are:
    - a. Coin mechs.
    - b. Rubber bumpers on the playfields.
    - c. The contacts on the flipper switches.
    - d. Fuses.
2. In video games, the most common failures are:
    - a. Coin mechs.
    - b. Switch contacts on joysticks and fire buttons.
    - c. Power supplies.
    - d. Monitors.

C. Power supply problems can be recognized by:

1. No video on the monitor.
2. Hum bars running horizontally across the screen.
3. Audio hum in the speakers.
4. No external lighting.
5. No audio.

D. There are three basic coin mechs:

1. The slide mech
    - a. Used in Air Hockey tables. It is not a common mech. used in ShowBiz/Chuck E. Cheese's.

2. The ramp mech.

    a. Used in many video games, mostly Nintendo games.
    b. Also used in balloon machines and other types of vending machines.
    c. Used in almost all kiddie rides.
    d. The ramp mech. performs three basic tests:

        1. Diameter
        2. Weight or bounce
        3. Magnetic

3. The drop mech.

    a. These mechs. are in almost all American manufactured games, video and pinballs.
    b. The plastic ones are not adjustable but the metal ones can be adjusted.
    c. The drop mechs. also perform three basic tests:

        1. Diameter
        2. Weight or bounce
        3. Magnetic

CONCLUSION

Preventative Maintenance is the key to a long life of the equipment and to the cost control of high repair bills. The key to good preventative maintenance is an: organized maintenance schedule. Remember that Preventative Maintenance costs alot less than repairs.

BALL CRAWL

CLEANING & P.M. SCHEDULE

SLIDE

____ Clean UVEX with WATER only. (Plexiglass over slide)

____ Clean slide with 409.

____ Check for "burrs" on slide surface.

____ Lightly apply anti-static spray to slide surface.

____ Clean and remove scuff marks from slide landing.

BALL CRAWL

____ Clean entry vinyl and vinyl kneepads with 409.

GENERAL

____ Vacuum entire area.

____ Check for loose lacing on restraining and perimeter netting.

WEEKLY:

BALL CRAWL

____ Collect all 3" balls into net bags.

____ Detergent spray and rinse clean.

____ While balls dry, clean vinyl pit with 409.

KEE CLAMPS

____ Check and tighten.

BASIC ELECTRONICS

BASIC ELECTRONICS

I. LESSON TITLE

Basic Electronics

II. INSTRUCTIONAL OBJECTIVES

Upon completion of this lesson, Entertainment Center Technicians will be able to:

A. Understand Electron Theory.

B. Identify the terms given to voltage, current and resistance.

C. Identify the voltages used in games.

III. REFERENCE

Basic Electronics Video Tape

IV. TIME

1 hour

V. TRAINING AIDS

Randy From's Basic Electronics Video Tape

VI. KEY POINTS

A. Understanding the Electron Theory

  1. Laws of Electrostatics

    a. Opposite charges attract.

b. Like charges repel each other.

2. Three things that can create "Free Electrons".

a. Heat

b. Light

c. Applied field

3. Ben Franklin's Conventional Theory States:

a. Electrons flow from positive to negative.

b. In theory, electrons flow from negative to positive because of the attraction the positive ions in conductive metals have for "Free Electrons".

c. Because of the common use of conventional theory, it will be the theory used throughout the course material.

B. The terms given to voltage, current and resistance may vary but the theory remains the same.

1. Voltage may be refered to as pressure.

a. Voltage is measured as alternating current (AC) and direct current (DC).

b. Voltage is not always the same throughout a circuit.

2. Current is sometimes refered to as flow and is measured in amperes.

a. Current does remain the same throughout a circuit.

b. Current will always seek the shortest path to ground.

3. Resistance is called the opposition to the flow of current and is measured in ohms.

a. There are three specifications of a resistor.

(1) Resistance in ohms.

(2) Tolerance in percentage.

(3) Disipation of heat in watts.

C. There are different and variable voltages found in games.

1. "AC" voltages may vary from .6 to 120 volts.

2. "DC" voltages are usually regulated to a positive or negative 5 volts, 12 volts and on occasion you may find a positive 6 volts and a positive 24 volts.

SEMICONDUCTORS

SEMICONDUCTORS

I. LESSON TITLE

Semiconductors

II. INSTRUCTIONAL OBJECTIVES

Upon completion of this lesson, Entertainment Center Technicians will:

A. Be able to identify all of the components used in games.

B. Know how components work and how to test them.

III. REFERENCE

Randy From's Semiconductors Video Tape

IV. TIME

1 hour

V. TRAINING AIDS

A. Randy Froms Semiconductor Video Tape

B. Exercises:

1. Test components with a meter.
2. Test components will an octopus.

VI. KEY POINTS

A. Almost all of the components that will be encountered in a game will be some type of a semiconductor.

1. A diode is a one-way gate for electrical current.
    - a. Current flows from the anode to the cathode.
    - b. Current passes in the direction of the arrow.
    - c. The junction drop of a diode is between .5 volts and .9 volts.
    - d. A diode of an equal or higher voltage rating may be used to replace one of a lower voltage rating.
2. Bridge Rectifiers
    - a. There are four diodes in a bridge rectifier.
    - b. Defective bridge rectifiers can also be replaced with ones of an equal or higher rating.
3. There are two types of transistors.
    - a. The "PNP" and "NPN".
    - b. The "NPN" is the most common and reliable type.
    - c. The three legs of a transistor are the Base, Collector and Emitter.
    - d. Current in the "NPN" transistor flows from the collector to the emitter and is controlled by the base voltage. Like a diode, the base voltage requires a minimum of .5V to .9V to turn on.
    - e. Like a diode, a transistor may be substituted with another transistor of an equal or higher voltage and current but the gain should remain relatively close.
4. The Darlington Transistor is used when a higher gain is necessary.
5. The Silicon Controlled Rectifier (SCR).
    - a. The "SCR" acts as a controlled diode. Like the diode, the voltage runs from anode to cathode but is controlled by the gate.
    - b. After the gate has turned on the "SCR" it takes a break between the anode and cathode to turn off the "SCR".

c. Like the diode, the "SCR" may be replaced with an equal or higher rated "SCR".

6. The Zener Diode acts as a diode until its zener rating had been exceeded. It will then retain its zener rating and pass the rest of the voltage from cathode to anode.

7. The Optic Coupler is a photo transistor that is turned on by a Light Emitting Diode (LED). They are used mostly in track-ball assemblies.

B. The proper and successful testing of the semiconductors in the electronic equipment is the key to repairing the equipment.

1. Diodes

   a. With the meter set on the diode test range you should read something in one direction and nothing in the other.

   b. A bridge rectifier is checked in the same way.

2. A transistor is also checked with the diode test range.

   a. Put the red lead on the base of the transistor and the black lead on the emitter, you should read a junction drop.

   b. With the red lead on the base and the black lead on the collector, you should read the same junction drop.

   c. Place the black meter lead on the base of the transistor and the red lead on the emitter you should read an open.

   d. Leave the black lead on the base and put the red on the collector, you should read an open.

   e. The final test is between the emitter and collector, you should read an open both ways.

3. The darlington transistor is tested in the same way as a transistor, remembering the junction drop is higher because of the two transistors. Also remember the diode between the emitter and collector of the second transistor.

PINBALLS

Always pull the manual first and read maintenance section. Pinball machines are probably the most important item on your P.M. Schedule. This is because they have the most moving parts, and generate a great deal of wear and tear during normal play. The actual lag time between P.M. service will depend entirely on the volume of your particular unit, and the amount of play the particular machine gets. All pins must be P.M.'d at least once a week. As a good rule of thumb, a pinball needs cleaning when the path the ball takes upon leaving the shooter rod has a visible mark left by the ball. Some of your new, or more popular machines may need service daily. Remember, a dirty or unplayable machine makes little money, and is a very bad reflection on ShowBiz Pizza.

Your P.M. Service should include the following:

1. Thorough cleaning with an approved pin cleaner.
2. Wax playfield after every other cleaning.
3. Re-rubbered as necessary (at least every third cleaning).
4. Replace expired lightbulbs on both the playfield and backbox.
5. All bumper posts, mini posts, and other devices attached to the playfield, especially those items struck frequently by the ball leaving the flippers must be

PINBALLS (Cont.)

checked for tightness. If repair is needed, as in the case of a screw hole worn too large to hold securely, the repair made should be of a quality, permanent nature. Some examples might be: the addition of a "T" nut to the underside of the playfield with a machine screw running through the playfield and into the nut. Filling the hole with a pie-shaped sliver of wood and "swell-wood" type of glue and retaping the screw hole. Sometimes simply moving the post slightly one direction or another and taping a new hole when the location is not critical.

6. Check all Jet bumpers, Thumper bumpers, and scoring devices to insure proper operation.
7. Check all drop targets for scoring and reset. Worn targets are to be replaced.
8. Check shooter rod rubber, replace all such rubbers when any wear is evident.
9. Check the ball(s) for nicks or burrs. A nick or burr will devour the decal on your playfield in short order. If your playfield suddenly shows signs of swirling or marking replace the ball immediately, and check the shooter rod rubber.
10. Check Shooter Rod for proper alignment (does the ball shoot smoothly out onto the playfield with no more than 3/4 spring tension. If not, realign rod, or replace spring. Check for rod lubrication.

11. With the machine TURNED OFF raise the playfield and check:
    - a. The bottom of the cabinet for screws, nuts, or other hardware. This is a sure sign that something has broken or come loose, or is about to. Make a habit to keep the bottom of the cabinet clean.
    - b. Check all mounting brackets, and other devices attached to the underside of the playfield for tightness.
    - c. Check the flipper primary coil end of stroke switches to insure that it breaks completely. Also check the points on these switches for excessive wear.
    - d. Run the machine through its self-test mode and look for expired speciality bulbs, and stuck switches. Also watch each solenoid pull-in during self-test.
    - e. Check each solenoid coil wrapper for excessive discoloration (don't forget the ball kickout solenoid). If questionable, replace the solenoid. This is much better than waiting for the item to fail, and replacing the solenoid and the accompanying drive transistors and I.C.'s.
    - f. Make a good visual inspection of the underside, looking for loose or hanging wires or parts. Lower the playfield. Turn machine back on.
12. Clean both sides of the back glass.
13. Play the machine and insure proper operation. Do all targets score? Is the speed of the machine adequate to keep things interesting? Do the jet bumpers activate

easily? These things are important to the play appeal of the equipment and do from time to time need adjustment.

14. Clean the underside of the playfield glass and install.
15. Clean the topside of the playfield glass, and place in self-test mode. Check for all replay levels. Do they agree with the insert card? Are they reasonable? A good rule of thumb here is your extra ball count (available in the bookkeeping functions of each machine). Extra balls should average about 10%, if not, readjust appropriate scoring. Consult the manual for the machine and determine the best method for this, as there are many options. They range from raising (or lowering) the replay scores, to making the machine "specials" easier or harder to obtain. Use moderation. Make one change this week; and then if necessary, make another next week, and so on until the proper freeplay is attained.
16. The proper volume for all playroom games 80DB.
17. Check the coin meter for proper operation.
18. Vacuum and dust inside the cabinet.

Additional information on the Pinball game has been made available to you by Bally/Midway in the following section. It is called "The Care and Feeding of Your Pinball Machine".

THE CARE AND FEEDING OF YOUR PINBALL MACHINE

ASSEMBLING THE GAME

Remove all loose items in the cabinet (cashbox, booklet, etc.). Stand the cabinet up in a vertical position on its back side. Bolt the two front legs to the front of the cabinet. Do not overtighten the bolts but make sure they are tight. Take a 3/8" nut and thread it all the way onto the leg castor. Insert this castor into the bottom of a front leg and screw it in until the nut reaches the leg. There should now be 3/8" between the castor and the leg bottom (the width of the nut). Repeat for the other front leg. Next lower the cabinet (the front legs are now on the floor), lift up the back end of the cabinet and place the head (lightbox) under the back end (horizontal to the cabinet so that the back box supports the game in the middle of the back end of the cabinet). The back leg castors should initially be set with about 2/3 of the 3" castor below the bottom of the leg with the locking nut "underneath". Take the back box out from under the game after the legs are attached. Next pull the line cord out of the cabinet and bolt the backbox to the cabinet using all the head bolts and washers. Be sure to align the head "flush" to the cabinet before tightening. The game will make less money if the head is on crooked. Screw the silver ground braid for the main cabinet to the ground braid running along the base of the backbox making sure that the braid does not contact the lightbox door when the door is closed. Insert all connectors to the circuit boards and connect the male-female connectors. These connectors must be squeezed together tightly. It is possible to plug the wrong connectors together in some games causing damage to sections of the circuit boards. To avoid this happening, it is best to match the wire colors every time you connect two connector ends. I try to match up at least three colors in three different positions, just to be sure. Check the circuit boards to make sure they are not shorting out to the sheet metal or ground straps located behind them. Newer models now use cardboard-type insulation paper behind the boards. On older games there are instances where board components will fail, and the only clue as to why, is a tiny burn mark on the sheet metal behind the boards. When changing components, make sure the component pin ends on the back side of the board are clipped short so they don't go through the insulation paper and short to ground. The edges of the light box door sometimes cut into the harness wires. To prevent this, reposition (bend) the harness away from the door edges and also off the corner points of the circuit boards. Tape the harness in place if necessary.

REMOVING THE PLAYFIELD GLASS

How many veteran pinball mechanics have never broken playfield glass? Most have and it can be quite embarrassing and costly. The correct way to handle the glass is by "cupping" the side edges of the glass with your palms. Avoid touching the glass with your thumbs which would leave fingerprints on the underside portion of the galss. To remove the glass, place your palms, one near each side edge, about one half way up the glass length, and slide the glass toward you slowly.

Care & Feeding of Your Pinball
Machine Cont.

Be sure to keep the glass at the same angle while you remove it. Never apply upward or downward pressure to any section of the glass. If the glass is stuck, lightly hit (again with your palms and don't wear heavy rings) all around the edges of the three railed edges of the playfield. As the glass slides off, move your hands up so that they are always over the playfield. The front edge of the glass should catch you below the belt in the pelvic area (don't hit the glass edge on a belt buckle or key ring), and lodge softly in the crease as you bend forward. Your hands should now be cupping the glass edge about 2/3 of the way up. Gently lower the glass down along one leg and catch the bottom edge on your ankle with your foot pivoted up, heel touching the ground. (You can walk with the edge touching squarely. Make sure there is no debris on the floor. Angle the glass against a wall away from doors and people. All this effort is to avoid hitting an edge of the glass or a corner which will shatter safety glass. Simply reverse this procedure to replace the glass. Always wipe the underside of the glass before putting it back to remove the white/gray film caused by the disintegrating rubber rings.

LEVELING THE GAME

1. Start with castors up in the front and 2/3 extended in the back. The angle of the game can always be reset after you see how the game plays and what percent of replays or extra balls have been awarded in the next few days.

2. Place a small level across the top end of the playfield width-wise (you want to level the playfield not the glass.) Adjust the back legs until the back is level. Repeat this procedure by adjusting the front legs so the cabinet is securely seated. To adjust diagonally, place your left hand on the top left side of the cabinet rail 1/2 way up and your right hand under the right side of the cabinet near where the right leg attaches. Push with the left and pull up with the right. The cabinet should not give or wobble. Switch hands and check the other way. Make adjustment accordingly. These are fine adjustments. Now back away and see if the game "appears" level. If not, you must compromise so the game will also "appear" level but always go through the "cross directional leveling".

3. Adjust the ball tilt. Kneel in front of the game and lift the cabinet front 1" off the floor with your knee. The "ball tilt" ball should roll slowly to the end of the track (tilt postiion). Lower the game and the ball should roll back down the track. You should be able to push the cabinet forward and backward with the ball rolling no more than 1/2 the track distance.

4. Center the plum bob tilt. Puttting the bob in the center of the ring and in a liberal position will give players a fair shake, since most players enjoy shaking the machine.

The Care and Feeding of Your
Pinball Machine Cont.

5. There is a vibration tilt under the playfield that shouldn't be used unless required by a really "rough" location. I recommend spreading the contact of this switch far apart. Again, this gives your players a fair shake.

6. Drop-test the slam switch by lifting the game up 1 inch off the floor and dropping it. The slam switch on the bottom board must activate "Game over tilt". Otherwise, some ingenious player might find the machine awarding credits or points by dropping the game.

ADJUST BALL SHOOTER PLUNGER

Center and tighten the ball shooter plunger so it hits the middle of the ball. Lubricating the plunger is also important. This helps the plunger rubber tip to last longer and stops the plunger end from "mushrooming". Players use the plunger to make "skill shots" at the top of the playfield. Shooting the ball accurately is a major part of the game.

PUT MYLAR ON PLAYFIELD

This will insure long life to the playfield. First wipe any dust from the playfield. It is best to have two people put on the mylar. Start from the top of the playfield and work your way down slowly, making sure that bubbles aren't present anywhere under the mylar.

PLAYFIELD

Most digital pinballs have switch tests which tell if there is a "closed switch". Unfortunately, they don't tell you if switches are too close, but not actually closed. Put up a game and gently "pound" (with your fist) various sections of the playfield (on the hood). If any switches are too close, points will be registered. You can also punch the sides of the cabinet (check vertical mounted switches) if you suspect free points are being awarded and can't explain why. Not also, if rollovers vibrate. Some may need to be tightened up by putting upward pressure on the backing switch blade under the playfield (use a point binder). Visually inspect each blade switch which should be placed 1/16" apart. Place the ball on all the rollovers, switches and star rollovers, and let it roll over the switches and star rollovers, starting with zero velocity. The ball should roll over each switch easily, otherwise during play the ball may become lodged on the switch and continually award points until shaken free. Adjust any backing blades that are exerting too much pressure on a rollover. And make sure all rollover wires are centered in the wooden playfield slots.

The Care and Feeding of Your
Pinball Machine Cont.

SIZING/REPLACING RUBBERS

In general, the correct size rubber to use is one that covers just over 1/2 of the desired area in the "unstretched" position. Before putting a ring on, stretch it out in your hand and check its elasticity. Its better to have a bad rubber (hard old ones) rip apart in your hand, than on the machine during operation. This also saves on maintenance. Be careful not to twist the rings when stretching them over the posts. The seam should run in a straight line parallel to the playfield. As a guide, if a rubber when taken off doesn't return to a circular shape, it should be changed. After replacing or rotating a ring, pass the ball through the lane next to the rubber insuring that the rubber is not blocking the path and is sized correctly. The rubber rings won't have to be changed as often if you slightly rotate them when the edges start to wear (around the posts, ends of flippers, on sides of drop targets) each time the game is serviced.

CLEANING THE PLAYFIELD

The condition of the playfield is an important factor in getting repeat players. Cleaning a playfield also gives you an opportunity to check for loose assemblies, rubbers, burned out or loose bulbs, loose caps, etc. You can also clean and rotate the rubbers. Playfields should be cleaned regularly (every 800-1,000 plays)! No one likes to play a pinball machine with a dirty playfield. The field gets dirty as the rubber rings wear and the particles stick onto the field and are ground in by the ball. It takes a few minutes to clean a playfield, so I recommend this being done at least every other week. Bally recommends Wildcat 125 which is a combination cleaner and polish. I like it for older games but it makes the ball go too fast on the newer games (so fast that the playfield assemblies break occasionally.) Use a nonabrasive cleaner and a towel. Wrap a towel around your first 2 or 3 fingers. This way you can easily get into lanes and under playfield assemblies without cutting your fingers on sharp metal or plastic edges. Apply the cleaner to the towel not directly to the playfield. Polish the ball as well, and make sure it is not pitted. A pitted ball can ruin a playfield in one day. When I clean a playfield I always have flipper and kicker rubbers handy. These take a few seconds to change and the increase in play appeal is significant.

OTHER ITEMS TO CHECK

1. Spinning target pivots should be lubricated with white lube. Make sure the wires and the target are in a straight plane and the target naturally returns to a position perpendicular to the playfield. Later, when the glass is on, make sure that the top of the target bracket doesn't touch the glass or isn't too close. Many times players will pound the glass and bend the target bracket (the glass does actually bend a little). In those cases the top of the bracket must be removed and the ends bent down away from the glass.

The Care and Feeding of Your
Pinball Machine Cont.

2. Plastic decoration caps (rubber, plastic, or metal) must be checked for tightness. A drop of glue usually does the trick. Use metal or threaded plastic caps on the kicker plastic caps (due to excessive vibration) as these caps tend to come loose more often than others.

3. The metal guide rails that are pressed into small playfield holes, often can't take the punishment of the ball and become loose, resulting in a service call. A super glue and match sticks will usually secure the rails. You can also roughen the edges of the rail and flatten the ends with a vice-grip. Then redrive the rail into the wood. A small finishing nail (1¼") should be driven in alongside the rail, out of the way of the path of the ball.

4. Direct the ball as it is ejected out of any saucer holes so that it doesn't drain (go between the flippers or down the outside drain lanes). Whenever possible, direct the ball to the thick part of a flipper so the player has a chance to get off a "skill shot" or have the ball shoot out to a pop bumper, being careful that the ball just doesn't keep going back into the saucer hole. The efection direction is changed by bending the tip of the kicker "opposite" to the direction you want the ball to go. Be careful not to break off the kicker tip. On older games, metal hole liners can be glued into the saucer holes. If these holes have become wider, due to the woods wearing away, each metal ring will reduce the hole diameter by 1/16". It will also reduce service because the ball will be nicely centered, and the kicker contacts will always close when the ball resets in the hole.

5. If the ball ever gets caught between the playfield plastics and the glass, you can easily raise the plastics by placing small rubber rings (3/8") and putting plunger tips over the thin posts under the plastics.

DIODES AND CAPACITORS

The pop bumper switches and bulls-eye type targets have small ceramic disc capacitors across them. These capacitors store the charge of electricity so the switch will be activated when it is closed for a small fraction of a second. These capacitors are especially necessary on the bulls-eye targets so score will be registered when the ball hits them hard. The pop bumper will be more "sensitive" with capacitors mounted to the switches. If one of these capacitors becomes "leaky", erratic operation of the corresponding switch will result. If the capacitor shorts, the switch will be "closed" and will not produce score when the ball physically closes the switch. A bad capacitor can also cause the game to score points repeatedly. If points are ringing up continuously and all switches are open, cut away one leg of the capacitor that you think is defective. If the scoring stops or the switch works, you got lucky. If, when you replace the cap with a new one, the same problem occurs, a leaky diode may be present. If the diode is bad, the signal can still "bleed" through the capacitor. Most of the time, however, the capacitor will be the problem. Check each coil and switch visually to make sure that the diodes and capacitors are soldered correctly. Where the diodes are not flush mounted to the coil base, apply a bathtub type sealer compound to the coil base attaching the diode and capacitors. This will reduce the vibration felt by the coil terminal connection. Most games have slots in the bottom of the cabinet for ventilation purposes. These slots should be covered with a thin grating so small parts can't fall through. Often you will be alerted to a problem because you've found a screw or nut in the bottom of the cabinet. This is a good reason to start with a clean cabinet, uncluttered with small parts.

UNDER THE PLAYFIELD

Whenever you have the glass off a pinball, there are a few areas under the playfield that should be checked:

1. There are two sections where the wire insulation is frequently rubbed off. The first is on the right side toward the top of the board, where the playfield edge is supported by the cabinet frame rail. When closing up a game, this wire harness can get caught between the playfield bottom and the frame rail. The second area is in the same position but on the left side of the playfield. These areas take a beating and are where many problems can be located. Other areas to search are where any wire bundle touch a light socket or bracket edge. Vibration will eventually cause these wires touching metal to have their insulation cut.

2. The technician should tape or protect the wire bundles which run from under the back portion of the playfield up into the lightbox. The vibration from game operation and the excessive rubbing caused when the playfield is raised and lowered during service, causes many problems. A good technician knows where to look.

3. FLIPPER ASSEMBLIES. The flippers are perhaps the most important assembly on a pinball. The stronger the flipper the better the player enjoys the game. Check the coil stop brackets to make sure they are tightly secured to the bracket frame and that the coil stop is on tight. Manually pull each flipper plunger in by hand, and adjust the end of stroke switch so that it opens at least 1/16 inch when the plunger is pulled in fully. These switches, as well as maximum flipper strength.

WHY FLIPPERS STICK: Flippers can stick because the end of strike backing blade catches on the flipper shoe. Flipper shoe insulation must be checked and rotated so it won't wear off. Wearing away of insulation between shoe and end of stroke will cause the 5 amp fuse on the rectifier board to blow. Check the flipper screws that hold in the flipper coil stop brackets. These will shear off or fall out if

The Care and Feeding of Your
Pinball Machine Cont.

they loosen. The plunger may not be perfectly lined up with the coin sleeve so the plunger can get stuck inside the sleeve. This can usually be fixed by filing out the sleeve with the rat tail file which will give the plunger a bit more clearance inside the sleeve. If this doesn't work, place a thin switch blade, as a spacer, under the bottom coil stop bracket or the top coin bracket, as required. This will slightly tilt the coil and hopefully it will now line up with the plunger. The last resort would be to tighten the return spring but this only reduces flipper strength and surely the flippper will get stuck again soon. Use a light file to smooth out the pivot wheel on the flipper shoe if it binds. Also smooth out the notch in the plunger where the wheel rotates in. A small burr will cause the plunger to stick. Return springs can ride over the fiberboard or plastic link and get caught on the top. This can cause the plunger to remain partially inside the coil sleeve and not return to its normal position. Springs with smaller diameter windings at the top could be used or wide links used. In the field it is good practice to "notch" the link near the edge with a hacksaw blade and carefully skip the spring into the notch. The spring edge remains in this notch as the plunger pulls in the releases and will not slip over the edge. (SEE BELOW) If the amp fuse blows regularly for no apparent reason, it probably is flipper related. A good rule to follow is, use a 5 amp fuse for two flipper games, a 6 amp fuse for three flippper games and a 7 amp fuse for four flipper games. When adjusting a flipper make sure there is 1/8" between the bottom of the plastic flipper and the playfield so that the flipper action is not slowed by friction with the playfield.

ADJUSTING BLADE SWITCHES

Switches should be adjusted by using a "point bender". This tool is inserted at the back end of the blade (near the mounting screws) to be adjusted. The long, backing blade should rest up against the wire form with enough presure so the form doesn't shake under normal vibration. A 1/16" gap between contacts is recommended. You should see the smaller lower blade move when the switch is closed. It is best to have the contacts touch when the switch is closed halfway by the ball. This will provide the self-cleaning action for the remaining half of the travel. The gold plated switches must never be filed. They are plated to resist corrosion. Clean these contacts by gently closing them on a clean business card or dollar bill, wiping any dirt off. Before adjusting a switch assemble, make sure that the screws are tight. If not, tighten the screws closest to the contact end of the leaf blade first. This will prevent the assembly from having the leaf switches "fan out".

The Care and Feeding of Your
Pinball Machine Cont.

COLLECTING A PINBALL

After a collection is made from the machine, the technician should thoroughly check and clean the coin acceptor. This is easily done by just opening the mech flap and wiping smooth the visible area. Drop a coin through each mech while putting a finger along the bottom to stop the coin. Then release your finger and let the coin drop. This checks the tension on the switches, (or trip wires) especially the switches used on older games. If the coin doesn't get stuck with zero velocity, it surely won't get stuck during a normal drop. Next send a coin through as you depress the coin reutrn. This assures that the return is not blocked. When replacing the cashbox, make sure the cover slots are properly aligned with the chutes. This way coins/tokens won't bounce out and cause shorts. Before closing the door, visually check the door slam switch, the pendulum tilt bob, and the ball tilt switch. Reach in and put your fingers on the flipper coil stop brackets, making sure they are tight. Also look for any parts on the bottom of the cabinet. Remember the old saying -"An ounce of prevention is worth a pound of cure".

LIFTING FUSES

A troubleshooting technique that may save time is to lift fuses before playing around with the harness wiring. As an example, suppose you have a strobing problem on a digital display. You can lift fuses F1 and F5 on the power board one at a time, and see if the problem goes away. If, for example, the wiring was shorted onto the lamp insert board in the head, the display would work when the general illumination circuit fuse was disconnected. This tells you that you have a short in the lamp circuit. If the problem disappeared when the other fuse was pulled, you may have a shorted return line on the switch matrix.

USING THE BOOKKEEPING FUNCTIONS

What you want to know here is the percentage of games won based on how many games were paid for. This number can range from 0% to conceivably a few hundred %. In general, pinball games should award between 30-50% free games but some games make more money if the percent is slightly higher. On a real fast game (average ball playing time is low) like "Eight Ball Deluxe", run them at 80-100%. You should also reset the "High Score to Date" at least once a week. Game won percents can be altered in several ways. You can raise or lower the back legs affecting the speed of the ball. Adjustments can be made to the liberal and conservative switches. Posts on the playfield can also be repositioned (see manual for adjustments). As a last resort, change the score for replays. This usually works when you lower the score but I recommend against raising the score because good players know what the correct factory score should be and they "resent" it if it is raised. The Win percentage formula is as follows:

$$\text{Win \%} = \frac{\text{GAMES WON}}{\text{GAMES PAID}}$$

The Care and Feeding of Your
Pinball Machine Cont.

PINBALL CHECKLIST

1. Check for worn rubbers.
2. Make sure rubber is correctly sized (little more than half way around where you want it to you).
3. Check space of points on switches - too close or too far (1/16" recommended).
4. Make sure playfield is clean.
5. Check to see that all posts are on tight.
6. Make sure legs and cabinet are clean.
7. Lift up playboard and check diodes - make sure they are secure.
8. Check capacitors - make sure they are secure. (Capacitors should be securely on target switches and pop bumpers.)
9. Check to see if coils are on tight. Tighten or replace flipper coil stop bracket screws.
10. Check all light bulbs.
11. Check and clean score reels (EM) and displays (DIGITALS).
12. Check to see if legs are on tight.
13. Check coin chutes with a coin and clean coin chutes.
14. Clean head glass back and front.
15. Clean playfield glass - both sides.
16. Check head bolts - make sure they are tight.
17. Check for damage on cabinet.
18. Check credit switch.
19. Put machine in self-test and check replay score levels.
20. Make sure legs are in good shape.
21. Remove debris from inside machine.
22. Check level of machine.
23. Check flipper brake blades and clean and set spacing (1/16") and check insulation.
24. Reset high score.
25. Check sling shot kicker nylon tips.
26. Check plunger assembly - tips, springs, etc. and center best as possible.
27. Check pop bumpers for dead spots.
28. Check pop bumper rings for shaft and yolk parts that might be worn out.
29. Check for loose wires on flippers.
30. Check for loose wires on coils.
31. Check for loose wires on brake blades.
32. Check for loose wires on target reset coils.
33. Check for loose wires on pop bumper coils.
34. Check flipper button contacts and brackets.
35. Check for sticky flipper brake blades.
36. Make sure that hole kicker doesn't drain ball.
37. Replace cracked flippers.
38. Check all scoring switches by hand.
39. Check to see if tilt pendulum is centered.
40. Play the game to see if all is normal.

The Care and Feeding of Your
Pinball Machine Cont.

PINBALL CHECKLIST (Cont.)

BALLY

a. Check for capacitors on round targets and pop bumper switches.
b. Check to see if drop targets reset with at least 1/16" over travel.

GOTTLIEB

a. Diodes on the coils.
b. Metal backing on flipper brake blades get worn.
c. Check pop bumper scoring - blades, usually brake.
d. Check to see if flippers stick.
e. Rotate rubbers behind drop targets.

WILLIAMS

a. Make sure drop targets score and reset banks (check horseshoe blades behind targets) (on older models).
b. Tighten power supply wire connectors or solder directly to terminals (on older models).

VIDEO

Always pull manual first and read maintenance section. Most videos are easy to maintain. The actual lag time between service may vary somewhat depending on the climatic conditions in your area. On the average a good cleaning (inside) once every 21 days is enough to keep the machine looking good. A clean machine inside and out will increase its appeal and play. Let's not confuse P.M. cleaning with daily cleaning of the play surface and dusting. All machine play surfaces and glass display areas should be cleaned at least twice a day. Typically, at the beginning of the day, and again just before the dinner (supper) rush. The P.M. cleaning and service is done inside the machine.

1. With the machine TURNED OFF, remove the display glass covering the C.R.T. (picture tube) along with any removable masks or overlays.
2. Clean the face of the C.R.T. with glass cleaner. Make sure there are no streaks left. Sometimes it takes two or three applications of cleaner to remove all residue. This is due to the "magnetic" character of the C.R.T.
3. Reassemble masks, overlays, etc. after cleaning both sides of each.
4. Insure proper placement or alignment of any cardboard displays on or around the C.R.T. It may be necessary at this point to power the machine up to insure no part of the C.R.T. display is obscured by the cosmetics of the

VIDEO (Cont.)

display. All scores, printing, etc. should be clearly visible.

5. Clean the backside of the cabinet glass and reinstall.
6. With the control panel in place but not secured, check controls. If lighted, is the bulb lit? Don't forget the light that might be in the coin door.
7. Secure the control panel, then drop 10 different tokens/ quarters (use both) through each coin mech. If the mech. rejects or sticks on more than one try, it should be replaced or readjusted. You can't play a machine that won't take your money. Also check each mech. to be sure that it does reject other types of coins: pennies, nickles, dimes, and tokens smaller than ours.
8. If the machine has a cooling fan (most cocktails, and some standups) expose it and use a small soft bristle brush to clean the passages and blades. If the fan is in a hard to reach place or near any electronics, the machine should be turned off.
9. Quarterly - The tech should check all supply voltages on MPU boards and monitor boards. They do require adjustment to factory standards from time to time.
10. Check the meter for proper operation.

VIDEO (Cont.)

11. Vacuum and dust inside of cabinet, note outside areas that need paint.
12. Check that the game is level.

ARCADES

Always pull manual first and read maintenance section. For the purpose of P.M. scheduling we shall consider an Arcade to be any device that does not fit into the first two categories. This will include Skee-Roll, Kiddie Rides, Billy Bob's Magic Cave, and the various dispensing machines. The actual lag time between service will depend somewhat on the climatic conditions in your area. This is intended as a general outline and should be supplemented with attention to your particular problem areas.

Kiddie Rides	Clean the entire outside surfaces with a mild soap and water solution at least once a week. The seat area should be cleaned daily. Some machines have bearings in drive sections that should be checked monthly for lubrication. Replace bulbs immediately upon burn-out. Check all safety switches!
Balloon Chucklin Chicken	Keep properly filled with balloons and lubricate as necessary. Weekly - clean outside surfaces with soapy water.
Skee-Roll	On a weekly basis the ramps and balls should be scrubbed clean. Bleach and water will restore the green rubber ramps and the same solution or a "409" type cleaner works well on the white score rings and balls.

ARCADES (Cont.)

	Use care so as not to get these areas excessively wet; then be sure to wipe dry or they will streak. Weekly - check for proper operation of all components: head, ticket mech., lights, ball release, ball counters, etc. Quarterly - clean area where the head unit is housed. Vacuum and remove foreign matter. Also remove ticket dispenser and remove paper residue from tickets.
Wac-a-Demon	Weekly check for proper operation of Demon pop-up and scoring, check retaining rings for lost or loose set screws, check batteries and battery chargers. If charger shows continual high amp. charge, the cause should be examined and alleviated immediately. Quarterly - vacuum bottom of cabinet.

SKILL GAMES

There have been several types of skill games added to the game rooms, pinballs being one of them, that were covered in a previous lesson. The following games are some that are found in the game rooms. When games are added in the future, make special note to their maintenance section of their manuals.

BOWLER ROLLER:

Bowler Rollers require very little maintenance but the maintenance needed is extremely important for good profit stock averages.

DAILY

1. Clean Rails: On stainless steel rails use a painters scuff pad or a coarse steel wool to keep the rails rough. A common cause for too many winners is a slick rail. The ball will lose traction as it climbs the second hill, lose its momentum, and stay in the pocket for a winner. On painted rails use a greaseless cleaner such as Glass Plus.
2. Clean Balls: Use a greaseless cleaner to remove oil and grease.
3. Clean all formica.
4. Check each unit for winners.

WEEKLY

1. Check air pressure.
2. Drain water from "FRL" filter.
3. Check oil in lubricator (10 weight non-detergent non-synthetic).
4. Check oil in compressor (30 weight non-detergent non-synthetic).
5. Drain water from storage tank.

PUTTER GOLF:

DAILY

1. Visually inspect the game.
2. Clean the cabinet.
3. Clean the playfield grass.
4. Clean the plexiglass and back glass.

PUTTER GOLF Cont.:

WEEKLY

1. Remove plexiglass over scoring rings and clean. These are tough ball scuffs and a plexiglass cleaner or playfield wax is needed.
2. Clean scoring rings and replace point numbers if damaged and also check scoring switches.
3. Check carpet wear, if carpet needs replacement do so with a green astro turf type carpet.
4. Check game frame, especially around ticket and coin areas. Clean with a good wax or armour-all will help.
5. Check all lights.
6. Clean ticket dispenser area.
7. Check and clean coin mechs.
8. Clean and check ball return area.
9. Putter should be fastened to game.

SHUFFLE ALLEY:

DAILY

1. Visually inspect the game.
2. Clean the cabinet.
3. Clean the back glass.
4. Clean the puck.
5. Remove and replace the shuffle wax.

WEEKLY

1. Remove shuffle wax from alley and clean alley.
2. Remove and clean pan under scoring wires and switches then reattach pan.
3. Check for broken wires and switches.
4. Check rubber return bumpers at front and back of alley. Also check rubber bumpers on sides of alley.

SHUFFLE ALLEY Cont.

5. Coat alley with playfield wax and replace shuffle wax on alley with new wax.
6. Check all game lights.
7. Check pins and pin hangers for damage and easy operation.
8. Check coin doors, coin mechs and meters.
9. Clean cabinet and back glass.
10. Check sound.
11. Use self test to check switches and game functions.

CHEXX HOCKEY:

DAILY

1. Visually inspect the game.
2. Clean and inspect the cabinet.
3. Clean the plexiglass dome.

WEEKLY

1. Clean and wax playfield and hockey players.
2. Clean rods and check movement of hockey players.
3. Clean dome inside and out with a plexiglass cleaner.
4. Check lights on score board.
5. Clean side of hockey playfield.
6. Clean cabinet.
7. Check coin door and coin mech.
8. Check sound level.
9. Check cooling fans.

AIR HOCKEY

Here are some suggestions to insure your table's maximum earning power and player appeal over the years to come:

PUCKS AND MALLETS - We can't over emphasize the importance of using the best pucks and mallets, if your table is to play properly and draw the highest possible earnings. The cheaper, imported pucks usually red, green, or orange) are slower and tend to fly off the table, resulting in loss of time, loss of earnings, and player dissatisfaction.

Using inferior pucks and mallets may save a few pennies today but can cost you thousands of dollars in lost earning over the life of your table. "Air Hockey" pucks and mallets are available from Wico and other parts distributors. Be sure to specify the deluxe, Air Hockey pucks or mallets.

Sandpaper should be attached to the side of the table or nearby, so players can sand the puck when it stops floating properly due to small nicks and abrasions. Sandpaper strips (fine grade) can be obtained at a hardware store, or from Wico. Sandpaper, like pucks and mallets, should be replaced when excessively worn.

CLEANING THE TABLE - We highly recommend rubbing alcohol (isopropyl alcohol) to clean the formica surface. Use a small amount on a clean paper towel to clean off dust and dirt which will slow the puck. Non-

AIR HOCKEY Cont'd

ammoniated window cleaners are also acceptable. Wildcat 125 may also be used on occasion (be sure to leave the table ON when using Wildcat). Clean the table once a week, or more if necessary. DO NOT USE silicone, waxes, or anything else which coats the surface and/or plugs up the holes. Once every year or so, check the air-holes and use a stickpin to punch out any holes clogged with dirt. (NOTE - when cleaning the table surface, do not clean off the side rails (where the puck hits). Believe it or not, the thin layer of dirt actually makes the puck bank properly and keeps it on the table).

PROPER LIGHTING - Make sure the table is well - and evenly - lit.

NO DRINKS ON TABLE! - Any liquid spilled on the surface should be wiped up IMMEDIATELY! Large amounts of beer, soft drinks, or other liquid can seep down the holes and into the particleboard, warping the top. We strongly recommend that you prohibit drinks from being placed on the table at any time.

TABLE REPAIR - For formica top. Like any other piece of equipment, it is susceptible to vandalism. A hard, sharp object (bottle, glass, or mallet) smashed onto the surface at the right spot (over the air channels) can cause a dent. Unlike other surfaces, however, the formica top is easily repaired without affecting the quality of play. Use clear epoxy to fill a dent in the surface. Allow the epoxy to set up slightly so it won't run down in to the air channel.

AIR HOCKEY Cont'd

If necessary, use putty underneath to keep the epoxy from running down. Fill to the surface level and allow to harden, then sand off the patched area so it's level with the surrounding surface. Your table will play as good as new. If desired, you can re-drill the air hole, although this is not necessary. Of course, with loyal game-players and proper supervision, you probably won't have problems with damage to the table.

SETTING THE TIMER - Your table has an adjustable timer which shuts the game off at a pre-set time, even if neither player has scored 7 points. We recommend setting the timer at 5 to 7 minutes (maximum playing time). The timer is pre-set at the factory but may come out of adjustment during shipping. Locate the timer wheel on the circuit board and rotate the wheel until the arrow points to the 3:00 position. Most games finish within 3 or 4 minutes, but the timer insures that the table will shut off should the players leave the table or take an exceptionally long time.

OPERATION & MAINTENANCE OF COIN MECHANISMS

ACCEPTOR UNIT

This precision built unit can be quickly set up for use with most coins. It will quickly and efficiently test for diameter, thickness, washer ferrous content, roundness, underweight, etc. All adjustments are on one easily removable disc. The microswitch bracket is designed to eliminate the operation of the microswitch with a wire, repeated milking by a coin with a thread attached, fraudulent operation with the unit tilted, or cheating with a matchstick, etc.

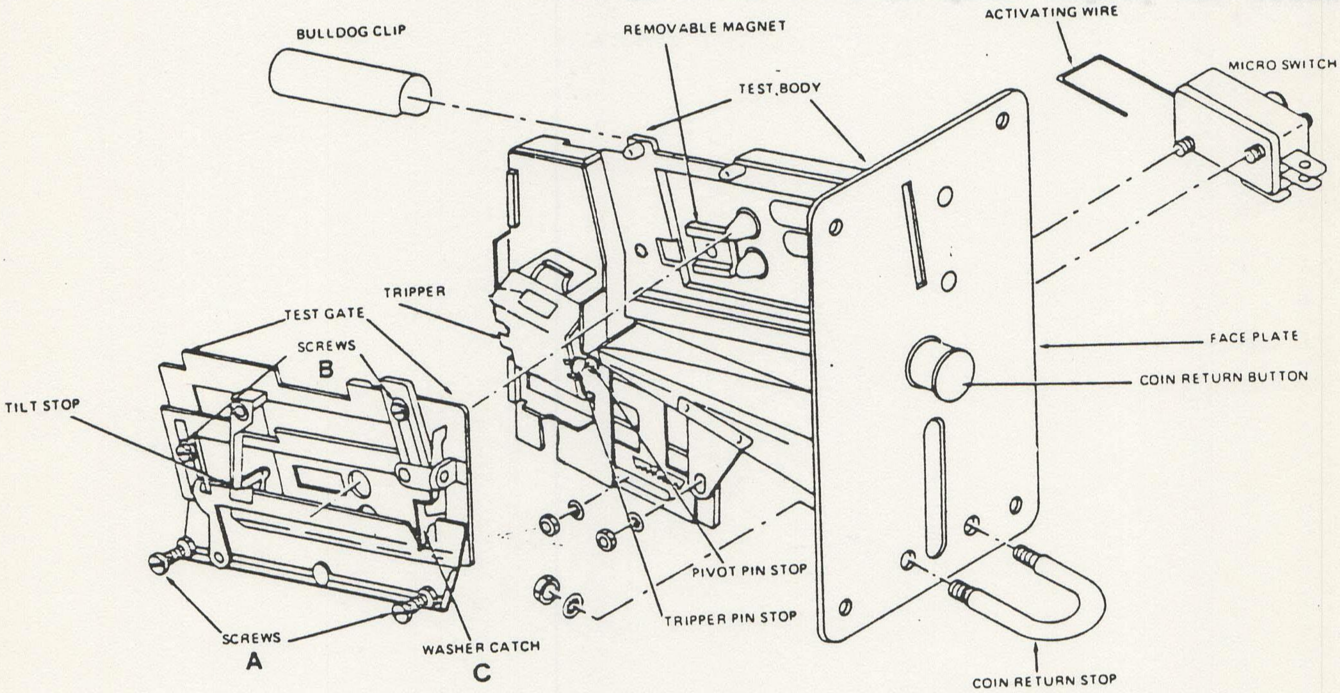
BULLDOG CLIP
REMOVABLE MAGNET
ACTIVATING WIRE
MICRO SWITCH
TEST BODY
TRIPPER
TEST GATE
SCREWS
B
TILT STOP
FACE PLATE
COIN RETURN BUTTON
PIVOT PIN STOP
TRIPPER PIN STOP
SCREWS
A
WASHER CATCH
C
COIN RETURN STOP

ADJUSTMENT:
COIN SIZE:

Thickness: Loosen both hex nuts on screws (A). Drop a coin through the opening in the face plate, stopping it midway through the test gate. Now tighten both screws (A) until the coin falls through the gap between the test gate and the test body. Turn both screws (A) one half turn counterclockwise and tighten the hex nuts. The mechanism is now set for the proper coin thickness.

Diameter: Loosen two screws (B) one turn. Drop a coin through the opening in the face plate stopping it midway through the test gate. Adjust the height bar affixed by screws (B) to permit free travel of the coin. Tighten screws (B).

Washer Catch (C) can be affixed in two positions by placing the cotter pin in the upper hole for coins that have a diameter of less than 24 mm (about 1") and the lower hole for larger coins.

Microswitch: The microswitch is mounted on an adjustble housing to allow for proper alignment of the trip wire.

HOW TO REPLACE THE LEAF SPRING

PURPOSE: For 25¢ coin selector, replace the original leaf spring with the modified leaf spring which will not allow 1¢ to go through.

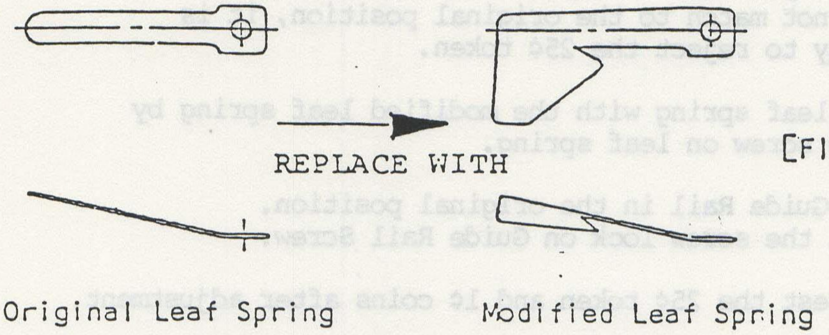
REPLACE WITH
Original Leaf Spring
Modified Leaf Spring

[FIG 1]

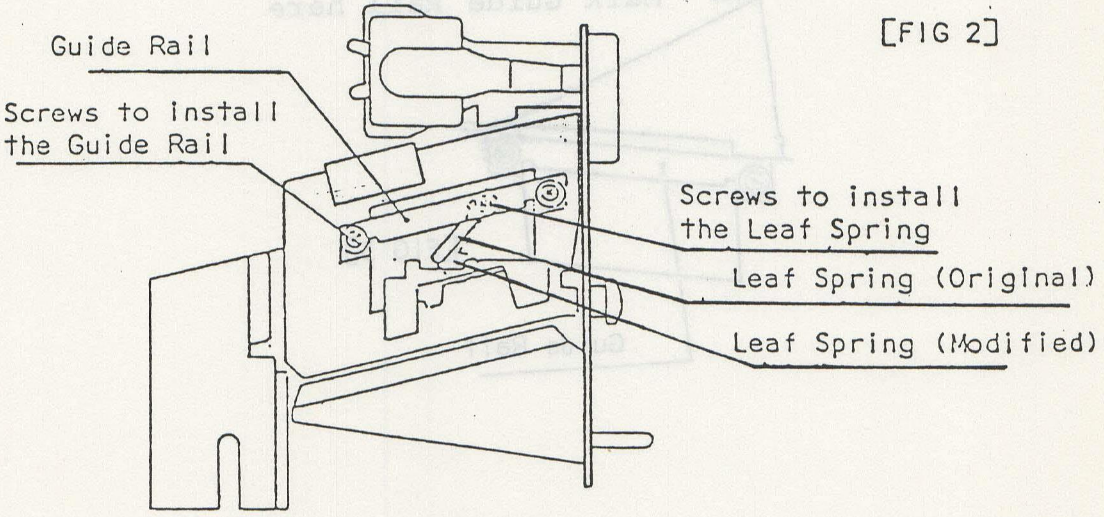
Guide Rail
Screws to install the Guide Rail
Screws to install the Leaf Spring
Leaf Spring (Original)
Leaf Spring (Modified)

[FIG 2]

25 ¢ Selector

1) Remove Guide Rail by loosening two screws on Guide Rail.

1-1) Before removing the Guide Rail, mark with pen to clarify the original position where it is installed in as per FIG. 3 and return it to the original position after installing leaf spring.

NOTE: If the position of Guide Rail after removing does not match to the original position, it is likely to reject the 25¢ token.

2) Replace the leaf spring with the modified leaf spring by removing the screw on leaf spring.

3) Install the Guide Rail in the original position.
NOTE: Mount the screw lock on Guide Rail Screw.

4) Be sure to test the 25¢ token and 1¢ coins after adjustment.

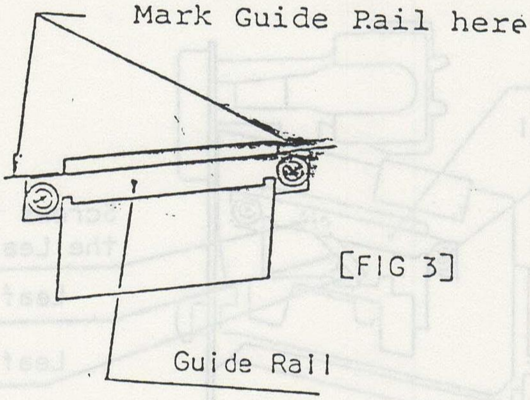

[FIG 3]

OPERATION

The "Series 100" Coin Mechanisms are designed to require a minimum of maintenance and field adjustment. Detection and rejection of undesired or counterfeit coins are determined by size (both thickness and diameter), weight, metallic content, and bounce.

Cradles are used to test the size of the coin. Undersize diameter coins will pass between the legs of the cradle and will be returned. Oversize diameter coins will fail to pass between the cradle and the diameter gauge and will be returned by actuating the wiper operating lever. In the case of the quarter acceptor, an undersize lever must first be pivoted to unlock the cradle. Undersize diameter "quarters" will fail to unlock the cradle and will be returned by actuating the wiper operating lever. Coins that are oversize in thickness will fail to pass between the magnet gate and the main channel and will have to be dislodged and returned by actuating the wiper operating lever.

Cradles are also used to test the weight of the coin. Underweight coins will fail to overcome the cradle counterweight and will be returned by actuating the wiper operating lever.

A magnet is used to test the metallic content of the coin. Highly magnetic coins, such as steel or iron, will be retained by the magnet and will be returned by actuating the wiper operating lever. Coins having comparatively high magnetic properties, such as copper, will be slowed down by the magnet and will drop off the end of the rail short of the "accept" entrance and be returned. Coins having little or no magnetic properties such as brass or zinc, will pass through the magnetic field so fast that they will "overshoot" the "accept" entrance and be returned.

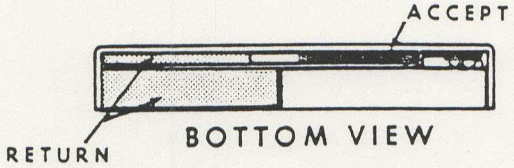

BOTTOM VIEW

In the case of the Nickel Coin Mechanism, a bounce tester is used to test the bounceability of the coin. Due to its magnetic properties, a genuine nickel passes quickly through the magnetic field and drops off the end of the rail in an arc that causes it to hit the bounce tester which, because of the coin's elasticity, "bounces" it into the "accept" entrance. A counterfeit coin passing through the magnetic field at the same speed as a genuine nickel will not have the same elasticity and so will not have the same "bounce" as a genuine nickel and will miss the "accept" entrance and be returned.

Serration Detector Assby's (US - Canadian Mechs)

As coins pass the detector spring it senses the serration on the coin edge, therefore directing coin to accept side of mech.

ADJUSTMENTS

All "Series 100" Coin Mechanisms leave the factory adjusted for maximum performance. If, however, more critical adjustments are desired, or if the unit has been completely disassembled for service, the following adjustment procedure is suggested:

A. Separator Assembly (On Dime and Quarter Coin Mechanisms only)

Set the Coin Mechanism with the back of the unit facing you in the test position.

1. Loosen the screw holding the separator and move as far to the right as it will go. Tighten the screw.
2. Insert several coins (both old and new) and note that some are returned by striking the separator.
3. Loosen the separator screw and move the separator a slight amount to the left. Tighten the screw.
4. Insert the coins again and, if some of them are still returned, repeat Step 3 until all of the coins are accepted.

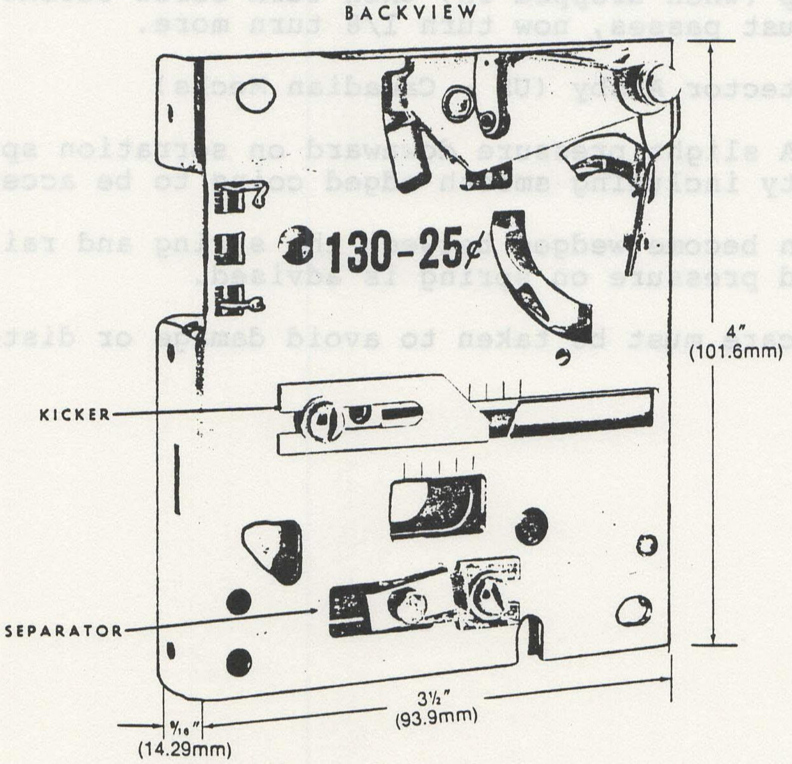

ADJUSTMENTS (CONT'D)

B. Kicker

5. Loosen the kicker screw and move the kicker as far to the left as it will go. Tighten the screw.

6. Insert several coins and note that some of them are returned.

7. Loosen the kicker screw and move the kicker a slight amount to the right. Tighten the screw.

8. Insert the coins again and, if some of them are still returned, repeat Step 7 until all of the coins are accepted.

9. Be sure the screws are tight after all adjustments are made.

C. The diameter gauge adjustment

Loosen screw, move diameter gauge to left, insert new coin and move diameter gauge to right until the coin passes, then tighten screw.

D. Magnet Gate Assembly

Turn thickness screw counter clockwise several turns or until coin hangs up (when dropped in) then turn screw clockwise until coin just passes, now turn 1/8 turn more.

E. Serration Detector Assby (US - Canadian Mechs)

To Adjust: A slight pressure downward on serration spring will enable variety including smooth edged coins to be accepted.

Should a coin become wedged between the spring and rail a slight upward pressure on spring is advised.

Caution and care must be taken to avoid damage or distortion to spring.

MAINTENANCE

Depending upon the environment in which the Coin Mechanism is used, periodic preventative maintenance should be performed.

The mainplate may be cleaned with any household cleanser. Thorough rinsing and drying are necessary to remove deposits and/or film.

Remove all filings from the magnet by guiding the point of a screwdriver along the edges of the magnet. You will notice the filings will cling to the point of the tool.

Remove the cradles and undersize levers and clean the bushings. A pipe cleaner makes a good bushing cleaner. Also clean the pivot pin. Apply powdered graphite or pencil lead sparingly to the pivot pin and bushing and reassemble.

On Nickel units make certain all foreign matter is removed from the bounce tester, also make certain the bounce tester fastening screws are tight.

In the event the recommended adjustment and maintenance procedures do not render your "Series 100" Coin Mechanism serviceable, check for worn or damaged parts and replace as necessary.

140-0 PARTS LIST

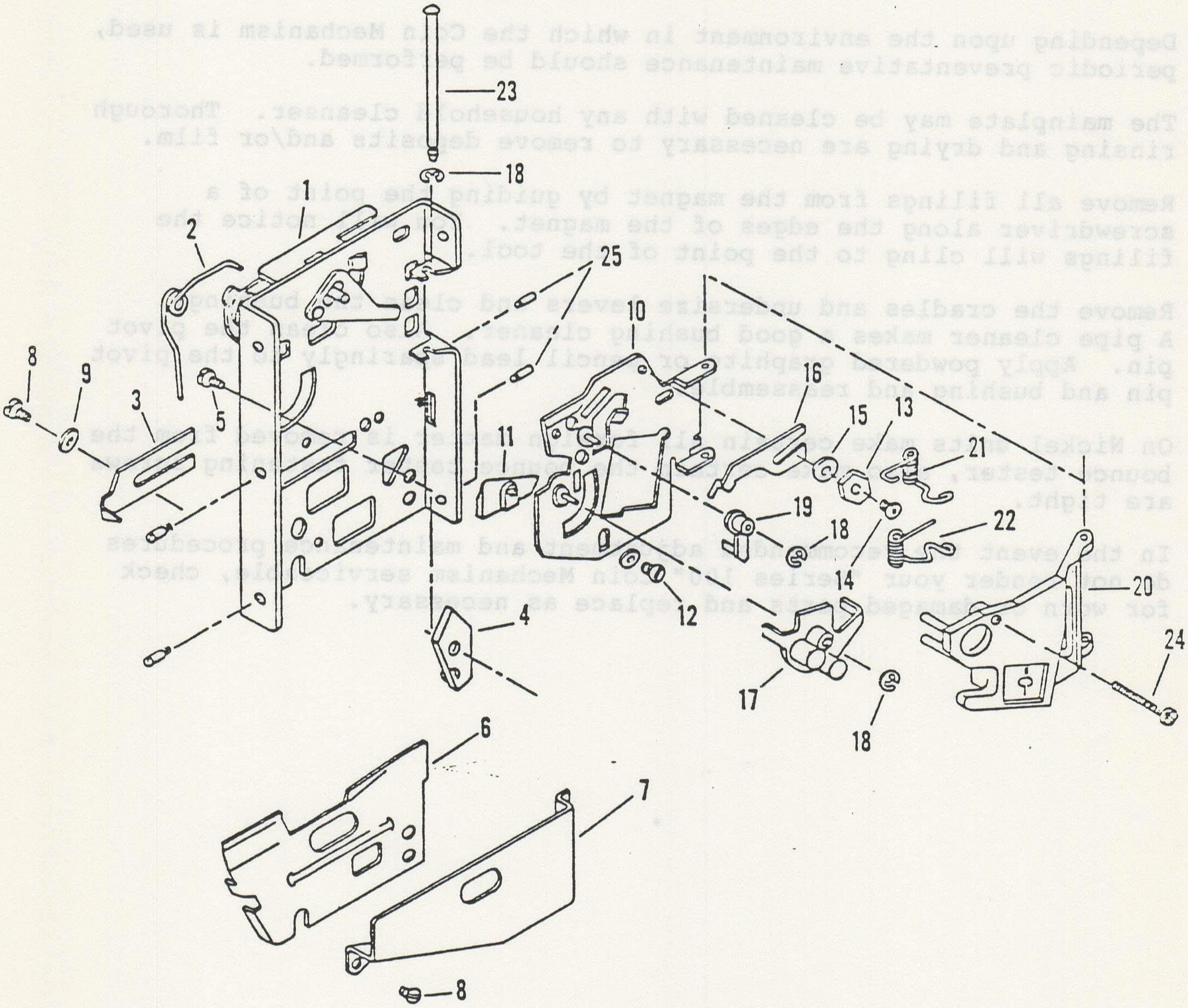
23
18
1
2
25
10
8
9
3
5
16
15
13
21
11
19
18
22
14
20
12
4
24
17
18
6
7
8

140-0 PARTS LIST

	Part No.	Name of Part	Qty.
1.	4021	25c Mainplate w/Sheet Form	1
2.	1027	Oper. Lever Spring	1
3.	1009	Kicker	1
4.	1059	Cut Anvil	1
5.	108-8-3	8-32 x 3/16 B.H.M. Screw	1
6.	1047	Cover Plate	1
7.	1004	Return Cover Plate	1
8.	188-6-2	6-32 x 1/8 R.H.S.M.S. Serr. Screw	2
9.	600-6	#6 Washer	1
10.	4012	25c Gate (Cut)	1
11.	1021	5c Rail (Ground)	1
12.	166-6-3	6-32 x 3/16 Pan Hd. Rail Screw	1
13.	400-4	4-36 Hex Nut	1
14.	100-4-6	4-36 x 3/8 R.H.S.M.S.	1
15.	600-4	#4 Washer	1
16.	1013	Adjustable Dia. Gauge	1
17.	4018	50c Cradle	1
18.	1046	"C" Washer	3
19.	4025	Cut Undersize Lever	1
20.	4014	Gr. Mag. Gate	1
21.	1028	Upper Gate Spring	1
22.	1029	Lower Gate Spring	1
23.	1024	Gate Pivot Pin	1
24.	1032	Thickness Screw	1
25.	1050	6-32 Mtg. Stud	4

N-110 PARTS LIST

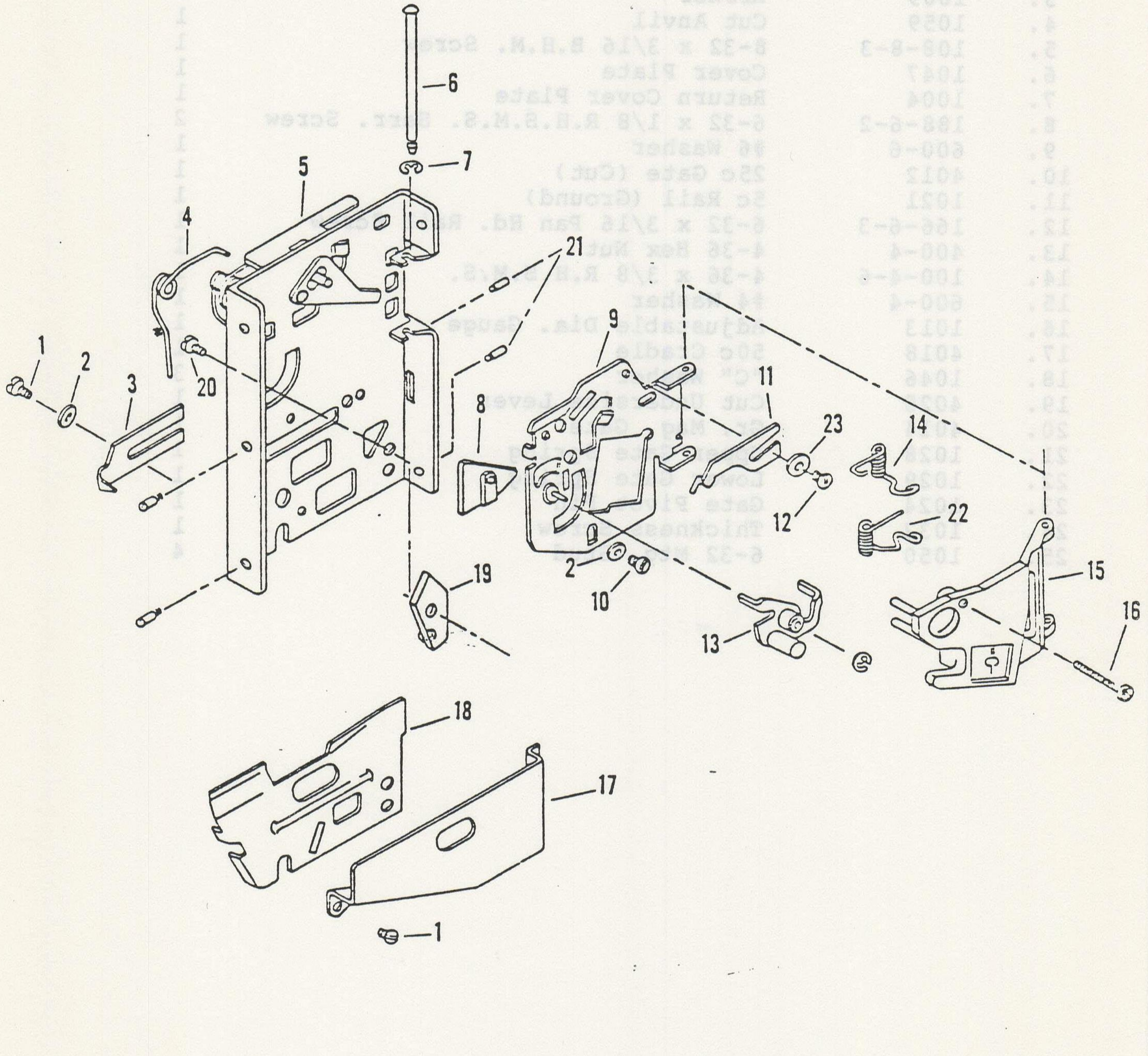
6
7
5
4
21
9
11
1
2
3
20
8
23
14
12
22
15
16
19
2
10
13
18
17
1

N-110 PARTS LIST

	Part No.	Name of Part	Qty.
1.	188-6-2	6/32 x 1/8 R.H.M. Screw: Serr	2
2.	600-6	#6 Washer	1
3.	1009	Kicker	1
4.	1027	Oper. Lever Spring	1
5.	4011	5c Mainplate Assby	1
6.	1024	Gate Lever Pin	2
7.	1046	"C" Washer	1
8.	1021	5c Rail	1
9.	4001	5c Gate Assby	1
10.	108-6-5A	6/32 x 5/32 B.H.M. Screw	1
11.	1013	Adj. Dia. Gauge	1
12.	100-4-2	4-36 x 1/8 R.H.M. Screw	1
13.	4017	5c Cradle Assby	1
14.	1028	Upper Gate Spring	1
15.	4015	5c Magnet Gate Assby	1
16.	1032	Thickness Screw	1
17.	1004	Return Coverplate	1
18.	1005	5c Coverplate	1
19.	1026	Anvil	1
20.	108-8-3	8-32 x 3/16 B.H.M. Screw	1
21.	1050	#6 Stud	4
22.	1029	Lower Gate Spring	1
23.	600-4	#4 Brass Washer	1

D-120 PARTS LIST

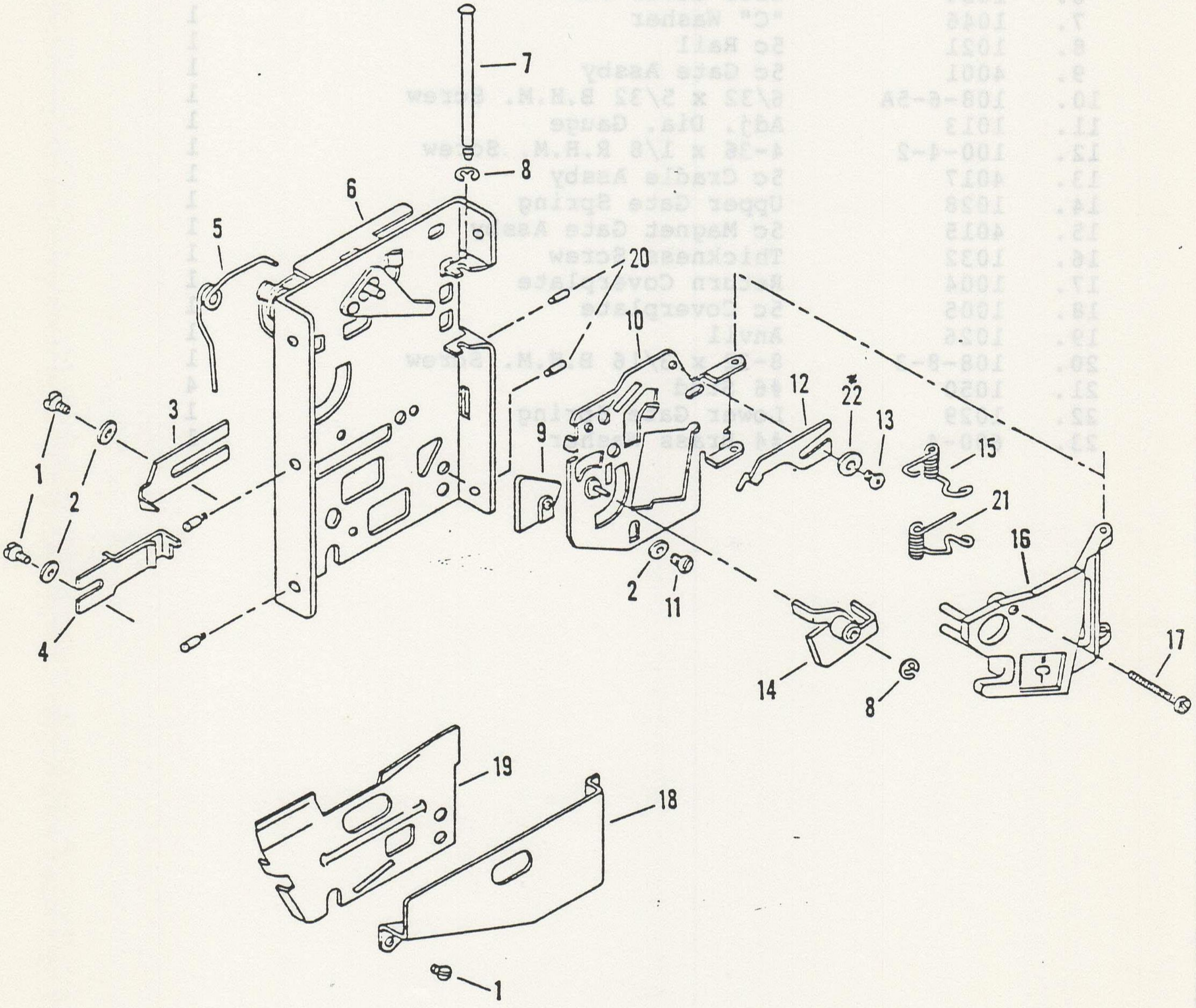
7
8
6
5
20
10
12
22
13
15
21
16
3
1
2
9
2
11
4
14
8
17
19
18
1

D-120 PARTS LIST

	Part No.	Name of Part	Qty.
1.	188-6-2	6-32 x 1/8 R.H.M. Screw: Serr	3
2.	600-6	#6 Washer	2
3.	1009	Kicker	1
4.	4000	Separator Assby	1
5.	1027	Oper. Lever Spring	1
6.	4010	10c Mainplate Assby	1
7.	1024	Gate Pivot Pin	1
8.	1046	"C" Washer	2
9.	1022	10c Rail	1
10.	4002	10c Gate Assby	1
11.	108-6-5A	6-32 x 5/32 B.H.M. Screw	1
12.	1013	Adj. Dia. Gauge	1
13.	100-4-2	4-36 x 1/8 R.H.M. Screw	1
14.	4009	10c Cradle Assby	1
15.	1028	Upper Gate Spring	1
16.	4014	10c Magnet Gate Assby	1
17.	1032	Thickness Screw	1
18.	1004	Return Coverplate	1
19.	1006	10c Coverplate	1
20.	1050	#6 Stud	4
21.	1029	Lower Gate Spring	1
22.	600-4	#4 Brass Washer	1

Q-130 PARTS LIST

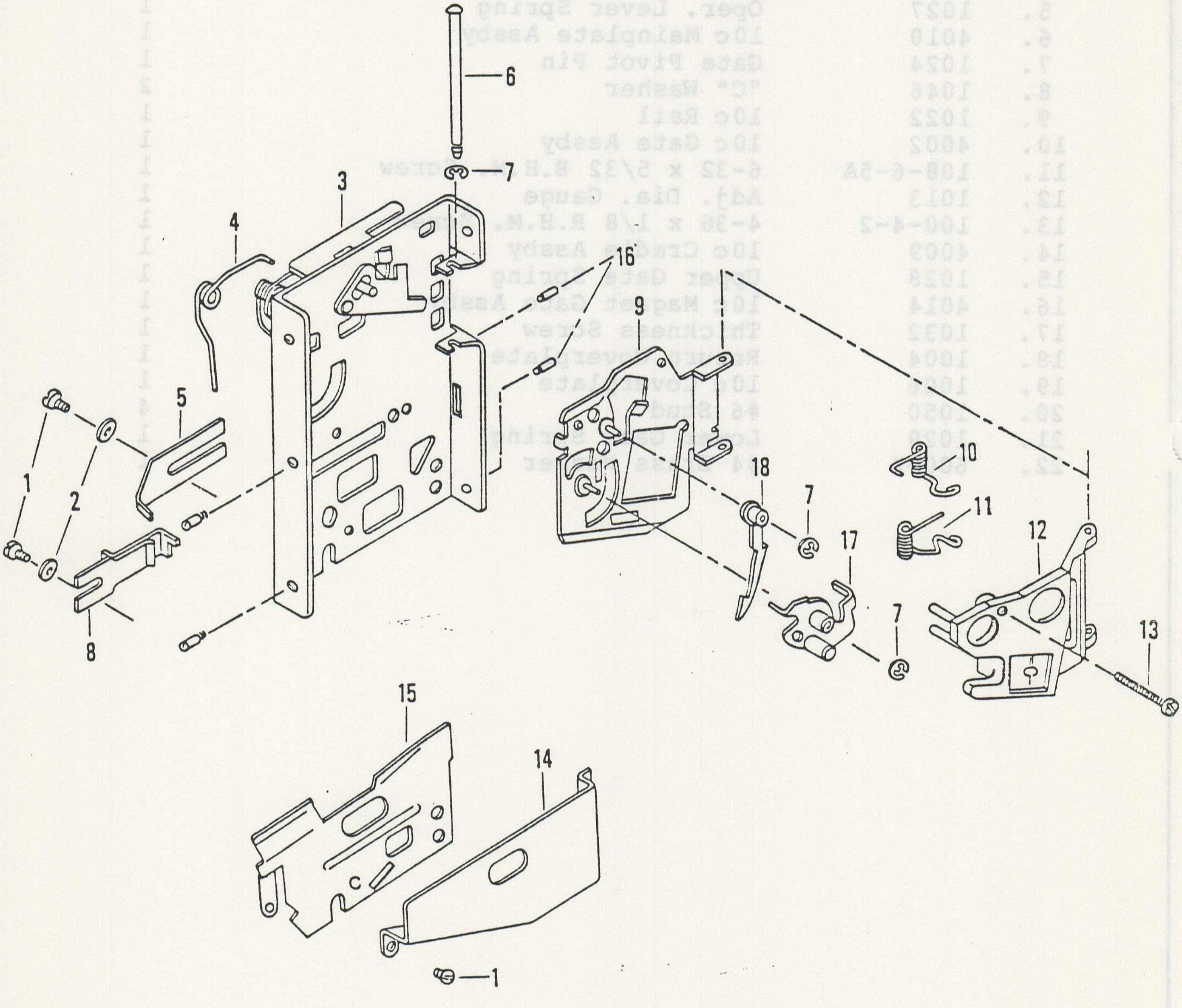
6
7
3
4
16
9
5
1
2
18
7
10
11
17
12
7
13
8
15
14
1

Q-130 PARTS LIST

	Part No.	Name of Part	Qty.
1.	188-6-2	6-32 x 1/8 R.H.M. Screw: Serr	3
2.	600-6	#6 Washer	2
3.	4042-1	25c Mainplate Assby	1
4.	1027	Oper. Lever Spring	1
5.	1009-1	Kicker	1
6.	1024	Gate Pivot Pin	1
7.	1046	"C" Washer	3
8.	4000	Separator Assby	1
9.	4008	25c Gate Assby	1
10.	1028-1	Upper Gate Spring	1
11.	1029	Lower Gate Spring	1
12.	4014	Green Magnet Gate Assby	1
13.	1032	Thickness Screw	1
14.	1004	Return Coverplate	1
15.	1007	"C" Coverplate	1
16.	1050	#6 Stud	4
17.	4016-S	25c Cradle Assby	1
18.	4004	Undersize Lever Assby	1

I. POWER SUPPLIES

A. The major componants of a power supply are:

1. The transformer

a. The transformer is an "AC" device and has two sides.

(1) Primary, input "AC".
(2) Secondary, output "AC".

b. The two types of transformers are:
(1) The step down transformer.
(a) More windings on the primary side than the secondary side.

(2) The step up transformer.
(a) More windings in the secondary side than the primary side.

c. There is a third transformer called an isolation tranformer that acts as a magnetic coupling device and passes input voltage direct to output voltage. It is a protection device when using high voltage.

2. The Rectifer

a. The rectifier is the device used to convert the "AC" voltage from the transformer to "DC" voltage.

3. The Capacitor

a. The capacitor acts as both a load and a source in the power supply.

(1) While the capacitor is charging, it becomes a load.

(2) While the capacitor discharges, it is a source because it is discharging between the peaks of the pulsating "DC".

b. Like diodes the defective capacitor may be replaced with another capacitor of equal or higher value.

c. Testing the components is done by following the procedures outlined in testing "AC" & "DC" voltages.

II. REGULATED POWER SUPPLIES

A. The purpose of a voltage regulator is to maintain a constant voltage, due to fluctuating "AC" input.

1. "78" series regulators are positive regulators. The voltage is indicated by the following two numbers.

2. The "79" series regulator is a negative regulator.

3. The input voltage of a regulator must be 2.5 volts higher than the output voltage in order for the output voltage to remain constant.

4. There is also an adjustable regulator. The output voltage will be determined by the values of the two resistors connected to the output and common teminals.

5. The series pass regulator is used when higher voltage or current is necessary.

   a. It uses a transistor instead of the limited three terminal regulator.

   b. The base of a transistor always compares itself to the emitter voltage. In a series pass regulator we can control the emitter voltage at the base of the transistor.

B. The protection circuits found in power supplies are commonly called crowbar or fold back circuits.

1. When an excess voltage is sensed at the cathode of the zener diode, the zener will conduct and gate the "SCR" which allows the voltage to go to ground shutting down the power supply.

2. The good thing about protection circuits is that once the problem has been corrected, the rest of the power supply should be good.

III. CONCLUSION

The functions of the three main components of a power supply have been outlined in the above material. Troubleshooting the power supply once the problem has been isolated, is only limited to your ability to test each individual component of the power supply.

TYPES OF MONITORS

RASTER-SCAN MONITORS

Some video-game monitors and all TV receivers use the **raster-scan** display method. The electron beam in this type of monitor scans the inside of the cathode-ray tube (CRT) in an endlessly repeated pattern or **raster**. The monitor creates images by **modulating** or **intensifying** the beam when it has reached the correct point.

Depending on the degree of modulation, the beam illuminates points with differing intensity. In other words, the greater the amplitude of the incoming video signal, the more powerful the electron beam becomes. As a result, certain areas of the phosphor glow more intensely.

The beam could be turned off so the screen would be totally dark, or the beam could be various medium shades, up to a bright shade. The various shades (usually white, grey and black) of infomration superimposed on the raster are called the **video**.

The type of phosphor used in the monitor is chosen for its color (green or white) and its degree of **persistence**. Persistence is the phenomenon that causes the screen image to linger for a moment, even after the electron beam has moved on to a new point.

If a very bright image is displayed on the same place on the CRT for a long time (say several months), the phosphor in that area may become permanently burned. On a monitor with no power applied, you can identify a phosphor burn as a beige-brown area. This burned area will probably not be visible when the monitor is turned on and displaying an image. Replace the CRT only if the phosphor burn becomes objectionable.

HOW A SCREEN IMAGE IS GENERATED: Figure 1 shows a simplified illustration of the non-interlaced raster. In this case, the electron beam begins creating the picture in the upper left corner of the CRT and sweeps out one horizontal line, ending at the right side. The beam is then repositioned back to the left side by a process called **horizontal retrace**.

During retrace, the electron beam is **blanked out** so no undesired illumination can occur. Retrace blanking is an internal function of the monitor and is not related to blanking signals produced by the game computer, except that both occur simultaneously. The computer signals H BLANKING and V BLANKING are used in developing sync signals; they also load new information into the motion-circuit counters.

After the electron beam has been reset to the left side again, it sweeps the second horizontal line, as shown in Figure 1. Since the beam is deflected vertically as well as horizontally, the second line appears beneath the first. The beam continues to scan in this fashion until the end of the last line, located in the lower right corner of the CRT.

At this point, both a horizontal and vertical sync pulse occur, and the electron beam is reset back to the left top corner of the CRT - where the beam began. This reset process is called **vertical retrace**, and the electron beam is blanked out during this time.

Each time the electron beam has scanned the entire CRT, it has completed one full **field** which contains 256 horizontal lines. In the non-interlaced raster, successive fields are laid out almost on top of each other. Two complete fields constitute one **frame**, and 30 frames are created per second.

When a monitor is not receiving incoming sync signals from the game PCB, it operates in the **free-running mode**. In this case, it simply generates a raster not timed with the operation of any other device. When connected to a video-game computer, it locks onto the sync signals and is therefore **synchronized** with the operation of that computer. The PCB sync signals are precisely timed, so that the electron beam in the monitor begins each **line** when an H SYNC pulse occurs. The **frame** begins with a V SYNC pulse.

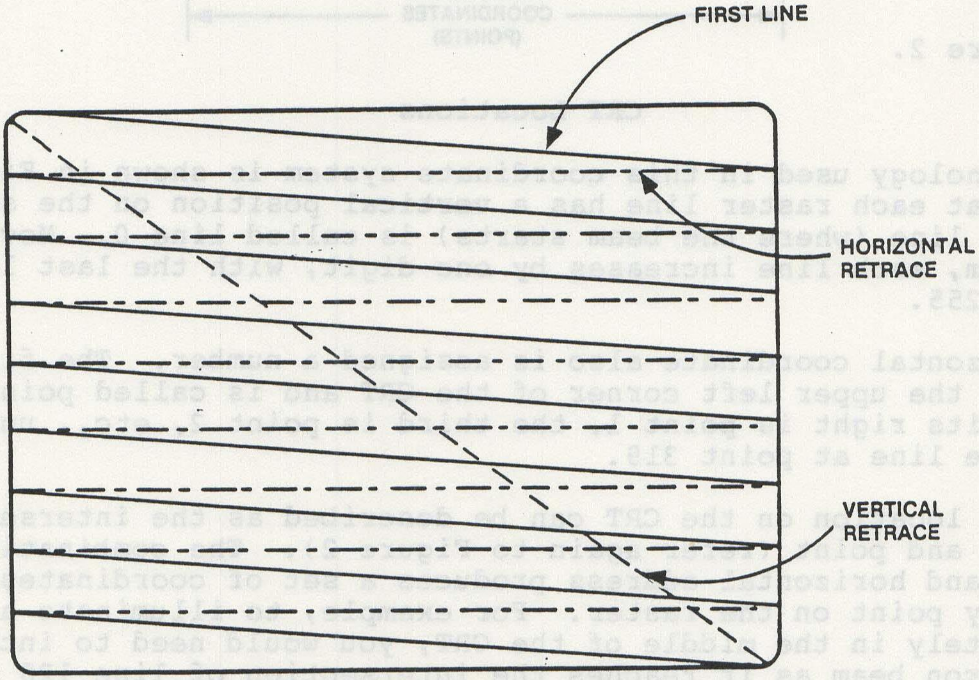

Non-Interlaced Raster Scan

FIGURE 1

Defining CRT Locations: A monitor generates a raster that contains 256 horizontal lines, and the game-PCB signals can illuminate up to 320 separate points to form an image. In order to illuminate a desired point, that point must be described so the electron beam is intensified exactly as it reaches the desired horizontal and vertical position. This is done by assigning a set of coordinates to each separate point.

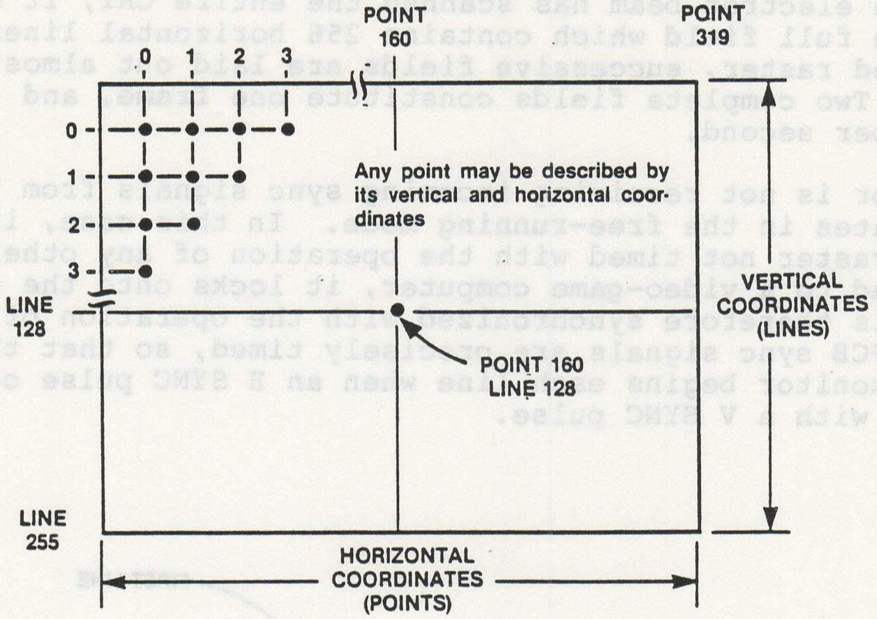
POINT 160
POINT 319
0
1
2
3
0
1
2
3
Any point may be described by its vertical and horizontal coordinates
LINE 128
VERTICAL COORDINATES (LINES)
POINT 160 LINE 128
LINE 255
HORIZONTAL COORDINATES (POINTS)

Figure 2.

CRT Locations

The terminology used in this coordinate system is shown in Figure 2. Notice that each raster line has a vertical position on the screen. The first line (where the beam starts) is called line 0. Moving to the bottom, each line increases by one digit, with the last line numbered as 255.

Each horizontal coordinate also is assigned a number. The first point occurs in the upper left corner of the CRT and is called point 0. The point to its right is point 1, the third is point 2, etc., until the end of the line at point 319.

Thus, any location on the CRT can be described as the intersection of some line and point (refer again to Figure 2). The combination of the vertical and horizontal address produces a set of coordinates to identify every point on the raster. For example, to illuminate a point approximately in the middle of the CRT, you would need to intensify the electron beam as it reaches the intersection of line 128 and point 160.

You can visualize the CRT as a rectangle bounded on the top and bottom by lines 0 and 255; the sides are bounded by points 0 and 319. Since points and lines are spaced approximately equidistant, a shape 4 by 4 will be about square.

I. RASTER SCAN MONITORS

A. The Cathode Ray Tube (CRT) consists of two main components.

1. The phosphor, which coats the front of the screen.

2. The electron gun which fires electrons at the phosphor to make it glow.

   a. The beam is deflected by the magnetic field in the deflection coil which is located on the yoke.

   b. The beam moves across the screen from left to right, down the entire screen 60 times per second. These are called raster lines.

   c. To draw a picture on the screen, shut the electron gun off where you want black instead of light.

      1. The signal that turns the beam on and off is called video.

B. The different circuits of a monitor are:

1. The video amplifier is the circuit that amplifies the video signal enabling the signal to control the electron gun.

2. The sync circuit is the circuit that keeps the 256 raster lines running in a straight line.

   a. The horizontal sync signal runs from left to right

   b. The vertical sync signal moves the raster beam from the lower right corner to the upper left to start a whole new cycle.

   c. Video games use either positive or negative sync.

      1. The positive sync system uses "O" volts to draw with and a quick pulse of positive 5 volts to tell the monitor to retrace.

      2. The negative sync uses a positive 5 volts to draw with and a pulse of "O" volts to retrace with.

3. The high voltage section is used to charge the inside of the tube with a positive charge so that the negatively charged electrons striking the phosphors have a way to return to the electron gun.
    a. The high voltage lead is called the second anode.
    b. The presence of a high pitched squeal indicates that the high voltage and horizontal deflection is working.

4. The power supply is used for converting the incoming "AC" voltage to usable "DC" voltage.

3. Color monitors work in the same way as a black and white monitor except:
    a. Three color guns
    b. Three types of phosphor
    c. Three video amplifiers
        1. The three video output transistors are located on the neck board.
        2. The three video amplifiers are located on the monitor board.
            a. The three amplifiers are identical
                1. Switch the inputs of the amplifiers to isolate a color problem.
        3. To adjust the color of the monitor you:
            a. Place the color drive controls to about mid-range.
            b. Adjust the color controls on the neck board until the screen is predominently white.

C. While working with monitors, safety must be a primary concern.
    1. Never use a screwdriver to discharge a picture tube. Always use a high voltage probe.

a. After working on the monitor remember to discharge the tube again before inserting the second anode lead.

2. If you are working with a "Hot Chassis" monitor, remember to use an Isolation transformer.

D. The convergence of a monitor should be performed as follows:

1. Always degause the screen first because convergence may not be your problem.

2. Set the color controls to make the majority of the screen as white as possible.

3. Usually by now you have probably discovered the problem. If not, it is time to begin moving the purity rings on the yoke, to achieve an even colored picture on a cross hatch pattern. This procedure should be covered in the monitor repair section of the game you are working on.

4. After the game has been returned to the gameroom it will be necessary to degause the screen again.

VII. CONCLUSION

Some points to remember:

A. The horizontal drive circuit drives the high voltage section.

1. If you have a screen raster, it is a good indication that the power supply, horizontal and high voltage sections are working.

2. If there is not a raster suspect the horizontal output transistor.

B. Remember again, if you can locate the problem circuit, you can isolate the componant by testing each component in the bad circuit.

QUADRASCAN X-Y MONITORS

The new generation of games uses a video display monitor commonly known as the X-Y monitor. Instead of scanning across many raster lines, this type of monitor uses vector generation to create images on the screen. Atari uses 15 and 19 inch black-and-white X-Y monitors, depending on the size of the game cabinet.

The advantages of X-Y monitors over raster-scan are several: they allow game designers to produce a more detailed picture, draw lines at any angle, and display more moving objects on the screen. Also, the monitor has greater contrast.

The only disadvantage (and a minor one, at that) is the inability to "fill in" areas with a solid color, as raster-scan monitors can do. Only outlines can be drawn.

Vector generation works on a simple geometric principle. The X and Y coordinate system (two-dimensional grid pattern) is "laid out" on the screen, and the dot at the center of the grid becomes the center of the screen. From this center point the dot moves outwards, drawing lines at any angle, including horizontally and vertically. These lines are called vectors.

With the X-Y monitor comes some new terminology. You may be familiar with raster-scan terms such as vertical, horizontal and video. You can set up loose relationships between both types of monitors as follows:

Horizontal - X axis
Vertical - Y axis
Video - Z

These relationships are shown in Figure 3. Note that all movements of the dot start at the center of the screen. This is the "zero" condition, when both input voltages to the X and Y amplifiers are zero.

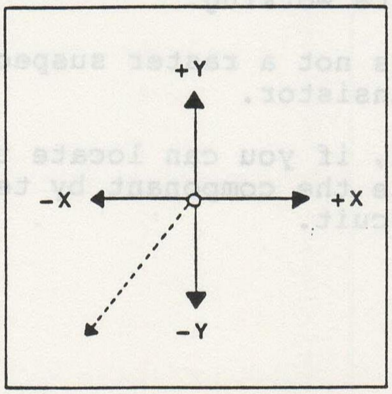

Figure 3. X-Y SYSTEM OF DISPLAY

Quadrascan X-Y Monitors Cont.

If the Y input voltage to the Y amplifier is gradually increased from zero volts to +7, the dot will move straight towards the top of the screen as indicated by the +Y arrow.

Conversely, if the Y input voltage is gradually increased from 0 volts to -7 volts, the dot will gradually move straight towards the bottom of the screen, as indicated by the -Y arrow.

The movement of the dot in the X axis is to the right for positive voltage, and to the left for a negative voltage input. If both X and Y input voltges are increased from 0 to -7 volts, the dot will move in the direction indicated by the dashed line. (Figure 3, Page 60 of this section)

QUADRASCAN X-Y

Figure 3 (shown earlier in this chapter) shows the X-Y display system with its two axes. To simplify troubleshooting, you can divide the monitor screen into four quadrants, divided exactly along the axes (see Fig.5).

Figure 6 shows examples of four separate symptoms. To determine where the problem lies, first determine what is present, then then what is missing. Use Figure 5 as a guide.

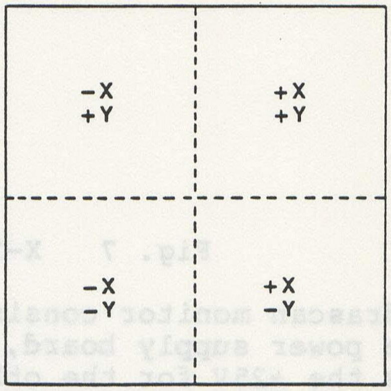

Fig. 5
Quadrants in X-Y Display System

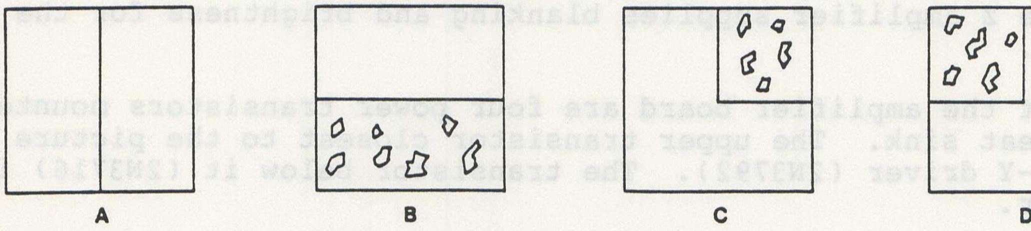

Symptom	Present	Missing	Probable Cause
A Thin line	+Y, -Y	+X, -X	X amplifier
B One-half picture	+X, -X, -Y	+Y	Y amplifier
C One-quarter picture	+Y, +X	-X, -Y	X or Y amplifier or -25V power supply
D One-quarter picture	(You figure out this one)		

Examples Of Four Problems in X-Y Monitors

FIGURE 6

Quadrascan X-Y Cont.

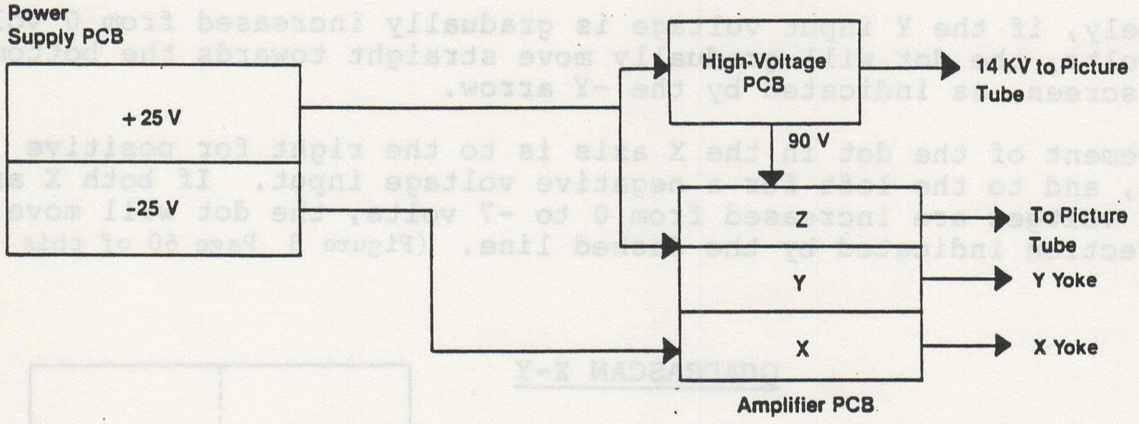

Fig. 7 X-Y Monitor Circuit Boards

The Quadrascan monitor consists of three circuit boards (see Figure 7). The **power supply board**, located on the bottom of the frame, supplies the +25V for the other two boards. The **high-voltage board**, locted inside the cage on the left panel, supplies all the high voltages needed for picture-tube operation. In addition, this board generates 90 V for the Z amplifier.

The **amplifier board** consists of three separate amplifiers. The X amplifier drives the X yoke windings, the Y amplifier drives the Y yoke, and the Z amplifier supplies blanking and brightness for the picture tube.

At the top of the amplifier board are four power transistors mounted on a large heat sink. The upper transistor closest to the picture tube is the -Y driver (2N3792). The transistor below it (2N3716) is the +Y driver.

The transistors closest to you are the X drivers. The top one is -X and the bottom transistor is the +X. You now have all the basic information necessary to begin repairing a Quadrascan monitor.

VOLTAGES ON X-Y MONITOR: Ninety percent of the problems in an X-Y monitor can be diagnosed with three key voltage measurements. They are as follows:

1. +25 volts - Measure this voltge on the case of the +X driver transistor (type 2N3716).

Quadrascan X-Y Cont.

2. -25 volts - Measure this voltage on the case of the -X driver transistor (type 2N3792). If one or both of these voltages are too low or high, proceed to the power supply section.

3. +90 volts - Measure this voltage on the amplifier board, as follows. Locate the Z amplifier transistor (Q504) right above the brightness control. Place the meter lead on the tab (or nut holding down the tab) of the transistor. If the voltage is lower or higher than 90V, proceed to the high-voltage board section. If all voltage measurements are correct, proceed to the XYZ amplifier board.

Remember, always make these three measurements first! Troubleshooting the three boards down to the faulty component is explained in detail.

Power Supply Board

The following procedure is for the +25 volt power supply. Components in parentheses are for the -25 volt power supply. All voltage measurements are to the chassis.

Problem	Solution
Fuse 100 (101) open	°Check bridge rectifier DB100 for shorted diodes °Check capacitor C100(101) for short
25V measures 40V	°Zener diode ZD100(101) open.
25V is too low	°Measure the voltage on the emitter of the transistor Q100(101). Should read 40V. If this voltage is 30V or less, capacitor C100(101) is open or one diode in DB100 bridge rectifier is open. °Remove the two screws holding the transistor Q100(101) to the heat sink. Measure the base voltage. If 27V, replace Q100(101). If less than 27V, Zener diode ZD100(101) is defective or capacitor C102(103) is leaky.

High Voltage Board

Remove the cover by removing the two screws on top of the cage.

Problem	Solution
Fuse open (F900)	°This may be a matter of adjustment. Locate the high-voltage adjustment pot R912 (next to (Q901). Rotate it completely clockwise. Replace fuse and apply power. Place positive lead of meter on pin 5 (grey wire) of the harness input connector P900. Slowly turn the high-voltage adjustment until the meter reads 90V. If the fuse opens again, check the following components. Opens: ZD900, ZD901, and Q901. Shorts: Q900, Q902, Q903, and ZD903.

Quadrascan X-Y Cont.

90V measures less than 80V

- Measure the voltage on the anode of the Zener diode ZD900 or the emitter of Q901. Should read 9V. If less, replace diode.
- Locate resistor R901 near the top edge of the board between Q900 and Q901. This 1.2K ohm resistor stands up about a half inch off the board. Place positive voltmeter lead on the resistor lead closest to the edge of the board.

Voltage Reading	Probable Cause
9V	Q901 shorted
Less than 15V	ZD901 shorted, or Q900 or Q902 has low gain
25V	Open Q900, Q902, Q903, R906 or T900

- If all components are OK, the oscillator circuit (Q903) may be loaded down by a defective component in the secondary of T900. With an ohmmeter, check the following components for leakage: D903, C909, C906 and C907. The other components D901, D902 and the doubler cannot be checked with an ohmmeter. Use the following procedure instead. NOTE: When working with the doubler, always make certain that the CRT anode is discharged to ground! Unsolder the wire going from the high-voltage transformer to the terminal of the doubler. Apply power and measure the 90V (pin 5 of R900). If the 90V comes up, replace the doubler. To determine if D901 or D902 are loading down the oscillator, unsolder one end of the diode and note if the 90V actually measures 90V.

"XYZ" AMPLIFIER BOARD

Missing information can either be caused by the logic (game) PCB or the X-Y amplifier. The easiest approach is with an oscilloscope. However, a scope is generally not available on location. Follow the steps listed below to determine which is the faulty board. The Y measuring points are in parentheses.

Missing X (Y) Information

1. Set your voltmeter on "AC" and on the 10-volt scale.
2. Measure the voltage at pin 1 (2) of P703. The meter should read 4.5V ± 1V. If less than 3.5V or even zero, the game PCB is defective and the monitor is probably OK.

XYZ Amplifier Board Cont.

3. Measure the voltage at pin 2(3) of P702. The meter should read 4.5V ± 1V. If zero, check for open fuse F700 (F600). This is a small pico fuse located near the side of P702. Replace with a 2-amp, fast-blow fuse.

If the fuse is OK and the voltage is low, check Q705, 706, 707, and 708 (Q605, 606, 607 and 608). You could swap the +X driver transistor Q708 with the +Y driver transistor Q608 to see if the problem follows the transistor. Similarly, the -X (Q707) and -Y (Q607) can be swapped.

Z AMPLIFIER

Proper adjustment of the brightness and contrast control is the same as for the raster-scan monitor.

1. Turn both brightness and contrast controls to minimum.
2. Turn up brightness until picture is barely visible.
3. Turn up contrast for desired picture.

Problems related to the Z amplifier are few. Remember! Make sure all power supplies are operating and that the filaments in the picture tube are glowing.

Problem	Solution
Black Screen	°Turn up the brightness control. One of three symptoms will appear: no picture, a dot in the middle of picture, or interconnecting lines between objects. Proceed to troubleshoot, based on what appears:
No picture	°R515 or brightness control (R516) is open.
A dot	°If the red LED (D507) is on, proceed to X-Y amplifier procedure.
Interconnecting Lines	°If the red LED (D507) is on, check the following components for shorts or open circuits: D504, D505, D506 and C510. °If the red LED is off: Q504 is open, Q503 is shorted, contrast control R526 is open or there is no Z input from the game PCB.

"X-Y" MONITORS

A. The differences between "X-Y" Monitors and Raster Scan Monitors.

1. When looking at the screen of an X-Y monitor you will see the picture drawn with individual lines. A raster scan draws and fills in the picture.

2. Instead of the video drawing raster lines from left to right in a raster scan, the video in a X-Y monitor tells the beam exactly where to go using a vector system.

3. Some things in the X-Y system are the same as the raster scan;

   a. The picture tube is the same.

   b. The yoke and deflection coils are the same.

   c. It still uses horizontal and vertical deflection, as well as sync, but the names have changed.

      1. Horizontal is called "X".

      2. Vertical is called "Y".

      3. Sync is called "Z".

B. The deflection of the beam is determined by the polarity of X and Y.

1. An important thing to remember is that both "X" and "Y" circuits are identical and can be switched as a troubleshooting aid.

2. The use of a split power supply is employed in the X-Y system.

   a. The "B+" from the power supply is applied to the collector of the "NPN" transistor to allow positive current to flow through the "X" yoke, allowing the beam to move to the right.

   b. When "B-" from the power supply is applied to the collector of the "PNP" transistor is the same circuit, it will allow negative current to flow through the "X" deflection coil causing the beam to move to the left.

c. Note: This is an identical circuit for the "Y" deflection coil.

1. When positive voltage is applied to the "NPN" transistor the beam will move up.

2. When negative voltage is applied to the "PNP" transistor the beam will move down.

C. The "Spot Killer" circuitry is activated when one of the following conditions exists.

1. If an entire X or Y amplifier were to fail, the symptoms should be a solid line on the screen, but because this could cause damage to the phosphor, a spot killer circuit is used to shut down the "Z" amplifier.

2. The second thing that could activate the spot killer circuit would be loss of video from the computer.

3. The third thing that will activate the spot killer circuit is the game power supply.

4. To locate the circuit that is causing the problem:

a. Check for the presence of a low "AC" voltage reading at the molex connector coming from the computer. If "AC" is there, your computer is fine.

b. Turn up the brightness of the screen. If your problem is in a deflection circuit, it will be indicated by the horizontal or vertical line on the screen.

D. The "X-Y" monitor uses a high voltage circuit that is completely isolated from the horizontal (X) circuit. It is called the Extremely High Tension Unit (EHT).

1. When testing for high voltage in the "X-Y" monitor you cannot listen for the high pitched squeal like in the raster scan monitor.

a. The first tool to use would be a high voltage probe. Place it under the cup of the second anode lead, you should read about 12,000 volts.

b. If you do not have a high voltage probe, check with your meter for a 90 volt output of the EHT unit.

c. If the 90 volt output is not there, check for the 40 volt input to the EHT unit.

d. If the 40 volt input is not there, start checking that circuit, not the EHT unit.

e. If the 40 volt input is there, start checking the EHT unit.

CONCLUSION

As mentioned many times before, once you have determined what circuit the problem is in, it is just a matter of testing the individual components in that circuit.

ADJUSTMENTS

The raster monitor is adjusted like any normal TV set. The adjustable controls are listed below.

1. BRIGHTNESS

Brightness is adjusted **before** contrast. Adjust so that the CRT background is the desired intensity.

2. CONTRAST

Adjust so that the images are as bright and clear as possible against the pre-adjusted background.

3. VERTICAL HOLD

Adjust only if the picture appears to be rolling up or down on the CRT. Adjust for a stable, centered picture.

4. VERTICAL HEIGHT

The vertical height and vertical linearity adjustments (below) are interactive. The vertical height adjustment changes the vertical dimenson of the picture. Adjust for optimum picture size.

5. VERTICAL LINEARITY

Change this adjustment only if the top of the picture seems compressed. If the game is a paddle game, adjust the linearity so the paddle remains the same size throughout its vertical travel.

If the game does not use paddles, use some other image to establish if the top of picture is being compressed. If adjusting the linearity adversely affects vertical size, repeat Steps 4 and 5.

6. YOKE

Generally speaking, do not touch the yoke adjustment unless you are a **qualified TV repair technician!** The yoke should never require adjustment unless the monitor has been installed in a different type of game or the adjustment magnetics have been tampered with.

In either case, the entire picture appears to be offset, and normal adjusting does not restore it to its proper position. The two yoke adjusters are located on neck of the monitor, and they affect the vertical and horizontal deflection of the electron beam.

If yoke adjustment is necessary, follow the instructions given in the appropriate monitor manual.

7. BRIGHTNESS AND CONTRAST ON X-Y MONITORS

Turn brightness and contrast all the way down. Then increase brightness until the images are barely visible. Adjust **contrast** for proper illumination.

INTRODUCTION TO TROUBLESHOOTING & REPAIR OF GAMES

INTRODUCTION TO TROUBLESHOOTING & REPAIR OF GAMES

I. LESSON TITLE

Introduction to Troubleshooting and Repair of Games

II. INSTRUCTIONAL OBJECTIVES

Upon completion of this lesson, Entertainment Center Technicians will be able to:

A. Perform complete P.M. on all games.

B. Understand common component failure in games.

C. Recognize power supply problems by observation.

D. Identify and maintain the different types of coin mechs.

III. REFERENCES

A. Technical Manual, pages (00) through (000)

B. Confidential Operations Manual

- Procedures: 16800.08

Follow the procedure guide under procedure 16900.

IV. TIME

2 hours

V. TRAINING AIDS

A. Randy Froms Arcade School Preview - Video Tape

B. Laminated P.M. Chart

C. Excercises

1. Games

2. Ramp and Drop Coin Mechs.

VI. KEY POINTS

A. Preventative Maintenance

1. Pinballs should be serviced once a week. Follow the procedure outlined in the Tech Manual, Page (00).

2. Video games should be serviced once a month. Follow the procedure outlined in the Tech Manual, page (00).

3. Arcade pieces should be serviced once a week. Follow these procedures outlined in the Tech Manual, page (00).

4. Support equipment should be serviced according to the service manual that came with the equipment or refer to the procedures listed in the Tech Manual, page (00).

B. Common Component Failures In Games

1. The most common failures in pinball games are:

a. The contacts on the flipper switches.

b. Rubber bumpers on the playfields.

c. Fuses.

d. Coin mechs.

2. In video games, the most common failures are:

a. Coin mechs.

b. Fine switch contacts or joysticks.

c. Power supplies.

d. Monitors.

C. Power Supply Problems Can Be Recognized By

1. No video on a monitor
2. Hum bars running horizontally across the screen.
3. Audio hum in the speakers.
4. No external lighting.
5. No audio

D. There Are Three Basic Coin Mechs

1. The Slide Mech.
    a. Used in some egg machines and all US Marshalls. It is not a common mech used in ShowBiz.
2. The Ramp Mech.
    a. Used in many video games, mostly Nintendo games.
    b. Also used in Balloon Machines and other type vending machines.
    c. The ramp mech performs three basic tests
        (1) Diameter
        (2) Weight or bounce
        (3) Magnetic

VII. CONCLUSION

Preventative Maintenance is the key to a long life of your equipment and to the cost control of high repair bills. The key to good preventative maintenance is an: organized maintenance schedule.

TROUBLESHOOTING GAMES

The following material basically covers Atari equipment. The theories of troubleshooting remain the same for all equipment. Use this guide in troubleshooting the games in your unit.

A. OBSERVING PROBLEMS

The key to troubleshooting and repair of any electronic game is the accurate analysis and definition of the problem. Rather than immediately trying to determine what is wrong, it is sometimes more sensible to identify and eliminate everything that is **not wrong**. If you follow this approach, you will narrow down your problem to one or two well-defined areas.

The troubleshooting process has four basic steps:

1. **Define the Problem:** What part of the game is operating correctly? What part is malfunctioning?
2. **Localize the Problem:** Is the power supply working? Do the switches and controls work? If the game has a monitor, is that working? Does the self-test check out OK?
3. **Isolate the Problem:** If you know which part of the game has failed (such as the power supply, harness or monitor), find out which specific component has failed.
4. **Replace the Defective Component.**

B. LOOKING FOR OBVIOUS PROBLEMS

Check the self-test feature in the game. Self-test will immediately supply you with clues to speed up the troubleshooting process. Note which parts function, and those that don't. Consult the game manual for the self-test procedure.

Normally the first step in the self-test will check the RAM and ROM in the board's micro-processor circuitry. Usually an audio or video signal will indicate a bad ROM or RAM.

After the ROM and RAM tests, the game will test the input and output circuits. If the self-test fails for some reason, check for obvious problems. For example, chips may be loose in their sockets. If switch tests fail, check for proper switch operation and adjustment.

Also look for damage to the harness and connectors before trying to touch the PCB. If output circuitry fails the self-test, first test the obvious items. Are any coils shorted? Test them with an ohmmeter for proper resistance, don't just eyeball them.

Troubleshooting Games Cont.

B. LOOKING FOR OBVIOUS PROBLEMS (cont.)

Are light bulbs or light-emitting diodes burned out? Again, test them with an ohmmeter. Learn to trust and use test equipment.

C. HARNESS PROBLEMS

Harness problems seem to cause headaches for the novice technician. Probably the major cause of harness failure is abusive handling or excessive flexing of harness or connector components (called fat fingering - see the Glossary at the end of this section)

Learn to use test equipment to troubleshoot cabinet problems. The efficient use of a volt-ohmmeter (VOM) can reduce downtime considerably. Use the PCB edge connector as a test point for troubleshooting, instead of pulling and flexing the harness assembly.

You should move the harness as little as possible during this process.

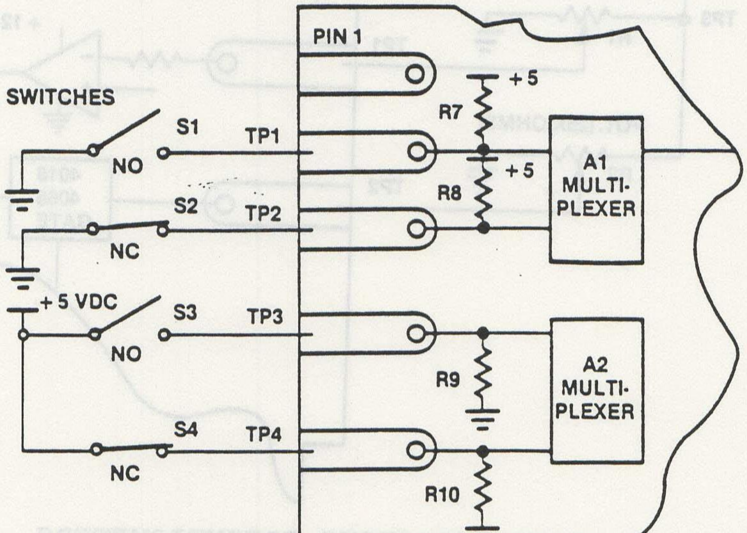
PIN 1
SWITCHES
S1
NO
S2
NC
+5 VDC
S3
NO
S4
NC
TP1
TP2
TP3
TP4
+5
R7
+5
R8
R9
R10
A1 MULTI-PLEXER
A2 MULTI-PLEXER

Fig. 1 TROUBLESHOOTING SWITCHES

Troubleshooting Games Cont.

1. Switches

Figure 1 shows every possible combination of switch inputs in a game. Using a VOM on test point 1 (TP1) will normally show 5V or a logic high present. When switch 1 is closed, TP1 should have 0 V present, or a logic low.

TP2 will normally have 0 V or a logic low. When the switch is opened, TP2 will go high.

Notice that these two switches have one side tied to ground. Also note that on the PCB they are connected to pull-up resistors R7 and R8. These pull-up resistors supply the 5 volt source for the switch circuit. The switches force the 5 V to 0 V when they are closed.

TP3 will normally have 0 V or a logic low present. When S3 is closed, TP3 will go to 5 V. TP4 will normally have 5 V present. When S4 opens, TP4 will go low or to 0 V. Notice that this arrangement is different from TP1 and TP2: the switches are tied directly to 5 V and the other side is using a pull-down arrangement on the PCB switch input circuit.

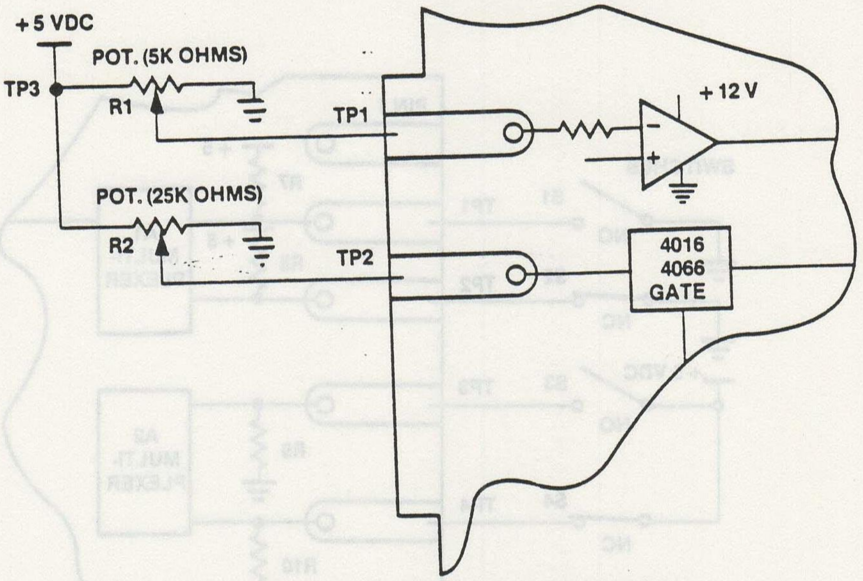

Fig. 2 TROUBLESHOOTING POTENTIOMETERS

2. Potentiometers

Figure 2 illustrates two potentiometer inputs used in video games. TP1 should be tested with a voltmeter. When R1 is moved from one mechanical limit to another, you should see a change in voltage. This voltage will vary, depending on the resistance of the PCB input circuits being tested.

Troubleshooting Games Cont.

It is not uncommon for a potentiometer to either open (infinite resistance) or have a dead spot due to dirt or other foreign material. This appears as jumpy or erratic needle movement on your meter as you slowly rotate the potentiometer from one extreme to the other.

Voltage measurements should be made between the test points and ground. If no voltage appears at TP1 or TP2, you should check the voltage at TP3.

3. Steering PCB

Figure 3 illustrates a typical Steering PCB input to a game PCB. You should use an oscilloscope to watch the activity on TP1 and TP2. As you rotate the steering wheel, you'll see waveforms as shown.

The most common failure in this curcuit is in the square or rectangular connectors on the Steering PCB. When no waveforms appear on TP1 and TP2, check the voltage on the Steering PCB. If there is 5 VDC present, check the outputs of the PCB to verify that it is working. Remember, you may have a harness problem.

You can also check the steering in a two-player driving game or a game with a Trak Ball assembly by switching the connectors from one Steering PCB to another. You are actually substituting a know-to-be-good component or circuit with a suspected bad one, thus isolating the problem to the connector or Steering PCB. If this works, reconnect the harness assembly as per the original configuration. If the game still works, tighten the connectors in the harness.

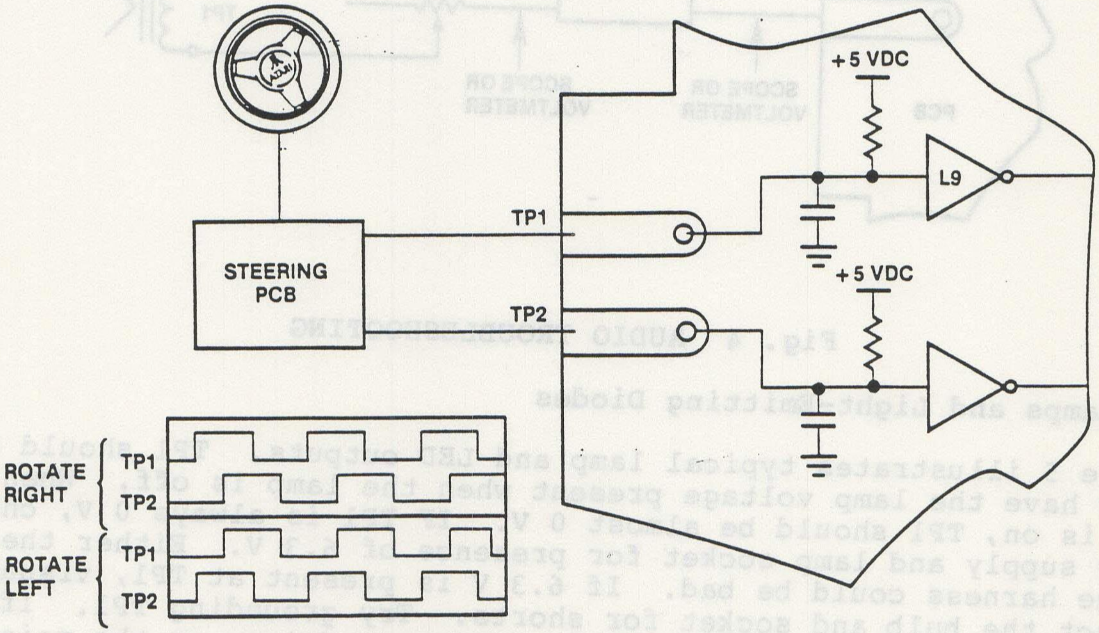

Fig. 3 TROUBLESHOOTING STEERING PCBs

roubleshooting Games Cont.

4. Audio

Figure 4 shows a recent audio circuit. Use a voltmeter or an oscilloscope to test these circuits when you find a no-audio condition. You can easily isolate a fault by measuring across the speaker terminals and checking for voltage changes or an audio output.

If voltage changes occur on the speaker terminals, but you have no sound, the speaker is at fault.

Use TP2 when no audio is present on the speaker terminals to determine whether or not the amplifier is working. If there aren't any voltage changes on TP2, check all voltages necessary to operate the audio amplifier.

Also check TP3 for the presence of an input to the amplifier. TP3 should have approximately 5 V peak-to-peak input. (This voltage will vary from game to game.) What you are looking for is voltage changes that represent audio. The most common failure in this circuit is the audio amplifier IC itself and related power supplies.

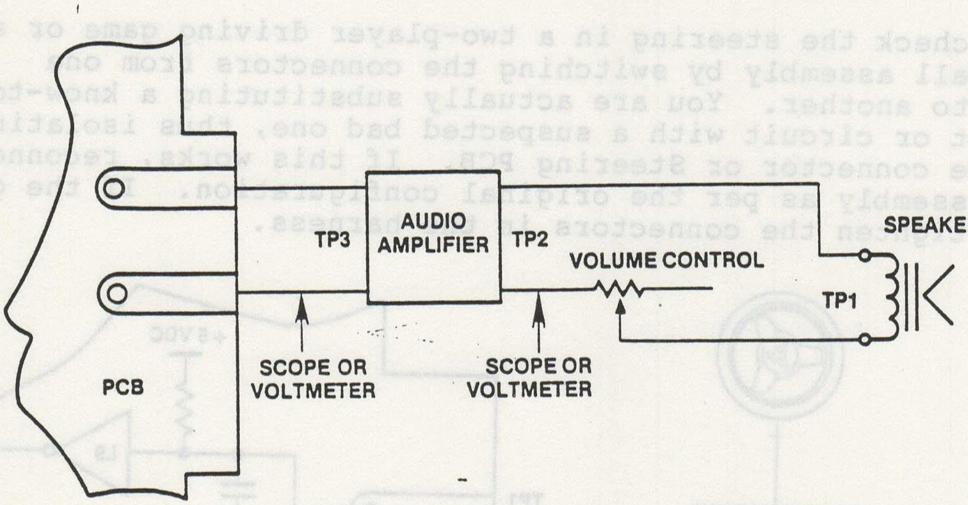

Fig. 4 AUDIO TROUBLESHOOTING

5. Lamps and Light-Emitting Diodes

Figure 5 illustrates typical lamp and LED outputs. TP1 should normally have the lamp voltage present when the lamp is off. When the lamp is on, TP1 should be almost 0 V. IF TP1 is always 0 V, check the power supply and lamp socket for presence of 6.3 V. Either the lamp or the harness could be bad. If 6.3 V is present at TP1, visually inspect the bulb and socket for shorts. Try grounding TP1. If the bulb lights up, you probably have a bad lamp driver on the main game PCB.

Troubleshooting Games Cont.

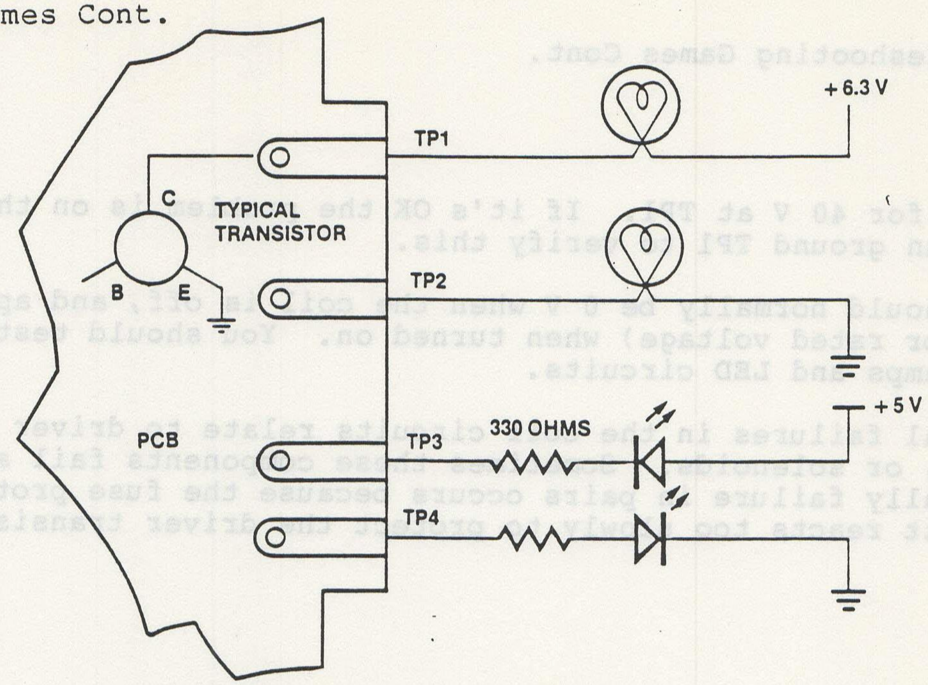

Fig. 5 **TROUBLESHOOTING LAMPS AND LIGHT EMITTING DIODES**

5. Lamps & Light-Emitting Diodes (Cont.)

TP2 should normally have 0 V present when the lamp is off, and 6.3 V when turned on. If you measure 0 V, then the lamp driver on the game PCB is probably at fault.

TP3 should normally be 5 V with the light-emitting diode turned off, and read almost 0 V when the LED is on.

You can troubleshoot LEDs with an ohmmeter exactly the same as lamp circuits, except in this regard: the LED should measure around 500 ohms one way, and with reversed meter leads should read infinity. **Note that you should do all ohmmeter tests with the game unplugged.**

6. Solenoids

Figure 6 illustrates two possible solenoid arrangements found in games. TP1 should normally be 40 VDC when the coil is off. When it is turned on, TP1 should go to almost 0 VDC.

If the coil fails to turn on, check the coil for shorts. Resistance should be low, but not 0: 7-10 ohms DC resistance is typical of pinball playfield coils.

Troubleshooting Games Cont.

Check for 40 V at TP1. If it's OK the problem is on the game PCB. You can ground TP1 to verify this.

TP2 should normally be 0 V when the coil is off, and approximately 24 VDC (or rated voltage) when turned on. You should test the coil as in the lamps and LED circuits.

Typical failures in the coil circuits relate to driver transistors, coils, or solenoids. Sometimes these components fail as a pair. Generally failure in pairs occurs because the fuse protecting that circuit reacts too slowly to protect the driver transistor from damage.

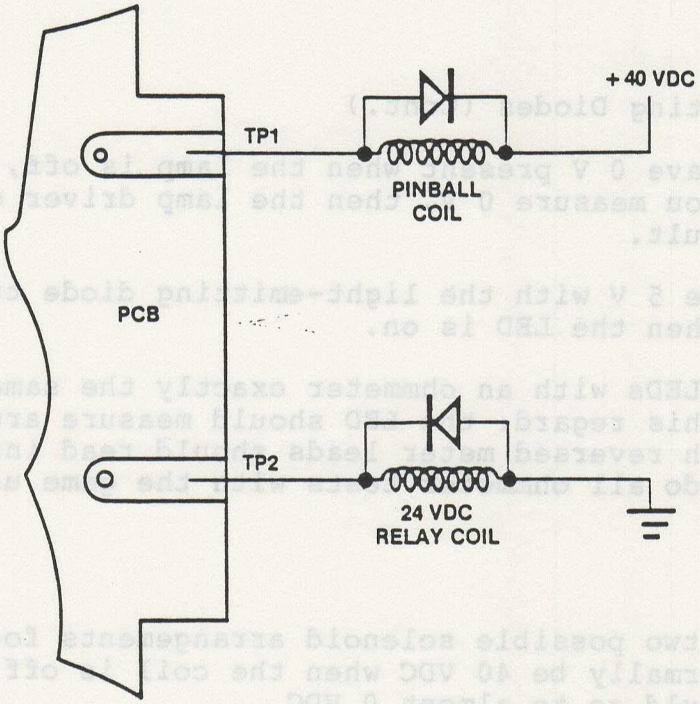

Fig. 6 TROUBLESHOOTING SOLENOIDS

Troubleshooting Games Cont.

D. MONITOR PROBLEMS

1. Raster-Scan Monitors

You can easily troubleshoot raster-scan monitors if you approach them correctly. First determine if the monitor even has a problem.

If the screen is black, the first step is to turn off the power; then disconnect the game-PCB connector from the game board.

Then turn on the power. Does the screen light up? If it does, touch the video-output pin on the game PCB connector. You should see some change on the screen such as dark wide vertical lines. If not, you probably have a faulty video amplifier in the monitor or its associated circuitry, or an open harness.

If the screen does change, then the game PCB has no video output. If there is no raster when the brightness is turned up, check for 115 VAC present on the harness connector at the rear of the monitor. Also check if the monitor fuses are blown.

Caution: If the monitor fuses are blown, do NOT replace any of them with larger fuses. This will cause the main power transformer to overheat and fail!

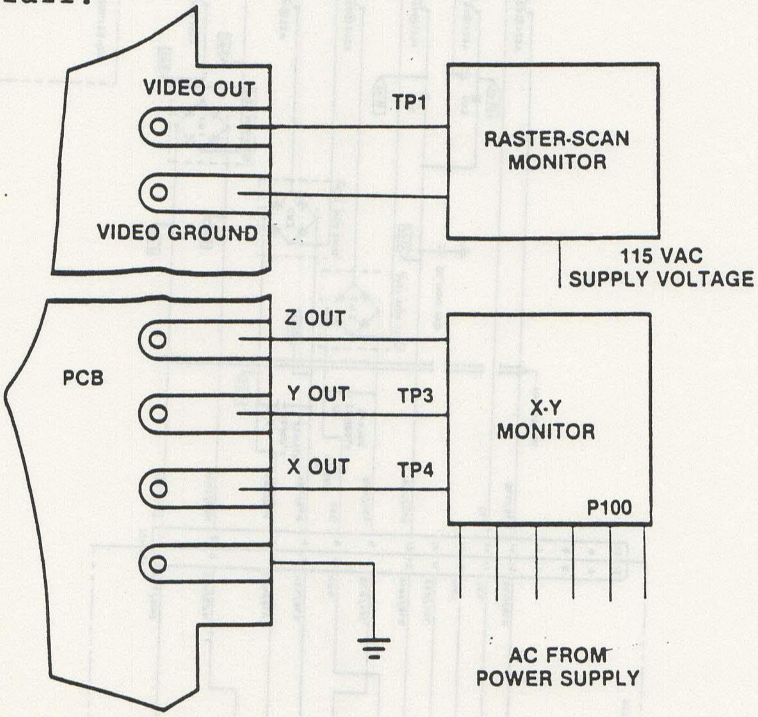
VIDEO OUT
TP1
RASTER-SCAN MONITOR
VIDEO GROUND
115 VAC SUPPLY VOLTAGE
Z OUT
PCB
Y OUT
TP3
X-Y MONITOR
X OUT
TP4
P100
AC FROM POWER SUPPLY

Fig. 7 TROUBLESHOOTING MONITORS

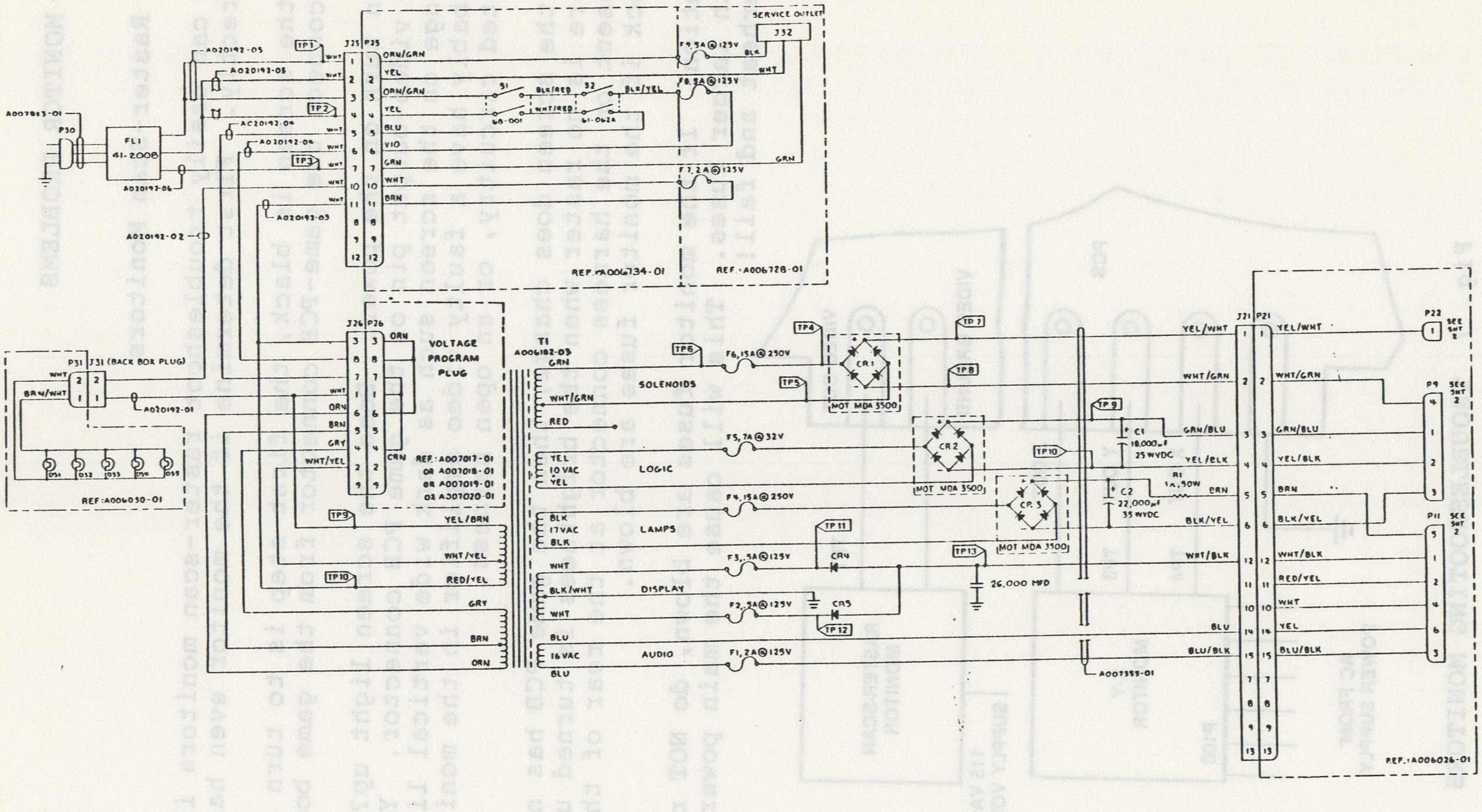
A007883-01
P30
FL1
41-2008
A020192-05
A020192-08
AC20192-04
A020192-04
A020192-06
A020192-03
A020192-02
TP1
TP2
TP3
J25 P25
WHT
ORN/GRN
YEL
ORN/GRN
YEL
BLU
VIO
GRN
WHT
BRN
S1
68-001
BLK/RED
WHT/RED
S2
61-062A
BLK/YEL
F9, 5A @ 125V
F8, 5A @ 125V
F7, 2A @ 125V
SERVICE OUTLET
J32
BLK
WHT
GRN
REF: A006734-01
REF: A006728-01
P31 J31 (BACK BOX PLUG)
BRN/WHT
A020192-01
DS1
DS2
DS3
DS4
DS5
REF: A006030-01
J26 P26
ORN
GRY
WHT/YEL
VOLTAGE PROGRAM PLUG
REF: A007017-01
OR A007018-01
OR A007019-01
OR A007020-01
TP9
TP10
YEL/BRN
WHT/YEL
RED/YEL
GRY
BRN
ORN
T1
A006182-03
GRN
WHT/GRN
RED
YEL
10 VAC
YEL
BLK
17VAC
BLK
WHT
BLK/WHT
WHT
BLU
16 VAC
BLU
SOLENOIDS
LOGIC
LAMPS
DISPLAY
AUDIO
TP6
TP5
TP4
F6, 15A @ 250V
F5, 7A @ 32V
F4, 15A @ 250V
F3, .5A @ 125V
F2, .5A @ 125V
F1, 2A @ 125V
CR1
CR2
CR3
MOT MDA 3500
MOT MDA 3500
MOT MDA 3500
TP7
TP8
TP11
TP12
TP13
CR4
CR5
26,000 MFD
C1
10,000 µf
25 WVDC
C2
22,000 µf
35 WVDC
R1
1Ω, 50W
A007359-01
J21 P21
YEL/WHT
WHT/GRN
GRN/BLU
YEL/BLK
BRN
BLK/YEL
WHT/BLK
RED/YEL
WHT
BLU
YEL
BLU/BLK
P22
P9
P11
SEE SHT 2
REF: A006026-01

NOTES: UNLESS OTHERWISE SPECIFIED

- - - denotes enclosure of components external to power supply (this sheet).

FIGURE 9: TROUBLESHOOTING POWER SUPPLIES

Troubleshooting Games Cont.

2. Quadrascan X-Y Monitors

To determine if an X-Y monitor is bad, you must use some test equipment, but you can still accomplish the troubleshooting fairly easily. First check for the presence of all voltages necessary to support the monitor.

At P100 of the Electrohome monitor, measure across the following pins and check for the presence of these voltages:

Pins 1 & 2 - 37 VAC
Pins 2 & 4 - 37 VAC
Pins 3 & 6 - 6.3 VAC

Next, with a voltmeter or scope, check the X, Y and Z outputs on the game PCB test points. (These should be made using ground as a reference.) If all these prove to be OK, then the monitor is bad.

E. CONNECTOR PROBLEMS

Typical connector problems you might find in a game are due to such factors as dirt, loss of spring tension and heat. The life of a connector will vary from game to game, depending on its application.

Use test equipment to examine signals coming from the game PCB, instead of fat-fingering the harness assembly. Most harness problems tend to be intermittent, meaning sometimes the object works and sometimes it doesn't.

When looking at a suspected harness problem, ask yourself a few questions. Is this an input problem? Do some or all of the switches work? Is this an output problem? Do all the lamps operate? Is there any video? Does the audio work?

If you start at the edge connector and look for logic changes on all the switch inputs, this will tell you whether or not you have a harness or a PCB problem. If you see that there is no change on a switch input, look for connectors in the middle of the harness assembly, instead of immediately wiggling all the connectors.

Try testing at the harness in this manner: poke a straight pin or safety pin into the wires on both sides of the connector. Don't disturb the connector. Then use these pins as test points.

If a problem seems to fix itself, don't assume it's gone - it's not! The problem is just waiting for you to walk away from the location. If you don't make a physical change to correct the problem, that problem still exists and will continue to haunt you!

Troubleshooting Games Cont.

All connectors depend on spring tension to maintain pressure enough to support current flow. If the spring weakens, the connector will no longer perform its job as a conductor. Instead the connector will act as a high-resistance connection.

In a switch circuit, this resistance will cause intermittent switch operation and eventually complete failure. Output circuits usually use higher current levels, and a high-resistance connection will heat up. The heat will make the connector oxidize and eventually burn if left alone long enough.

If you trace an intermittent problem to an edge connector, you can cure the problem in most cases by cleaning the pads on the game PCB with a pencil eraser. In the more persistent cases, you may have to re-tension the connector itself. This is not a permanent solution: eventually you will have to replace the connector anyway.

Connectors such as those made by Molex can also present the same problems. You can prolong eventual replacement be re-tensioning the female pin in this connector.

F. POWER-SUPPLY PROBLEMS

The heart of any electronic game and also another potential source of problems is the power supply. Figure 8 (Page 78 of this section) shows one example of a game power supply.

Normally the AC voltge reading across TP1 and TP2 should be approximately 115 VAC. It should read the same across TP1 and TP3.

Check the transformer output by measuring across TP4 and TP5, for example. If you get no reading, then measure across TP5 and TP6, to test fuse F6 (15 amps, 250 V). Finally, test the transformer inputs to verify if the transformer is bad.

If TP5 and TP6 have no AC reading across them, and the inputs TP9 and TP10 read apprxoimately 115 VAC, then the transformer is bad.

If the reading across TP4 and TP5 checks out OK, then your next step would be to measure DC voltage across TP7 and TP8. These are most easily reached on the diode assembly's positive and negative terminals.

In the case of the diode bridge assembly CR2, you can more easily test the TP9 and TP10 on the filter capacitor terminals. You should loosen and retighten the screws on the filter capacitors, to insure that corrosion doesn't build up on the wire lugs.

Diodes CR4 and CR5 made up a typical 5-volt power supply arrangement. TP11 and TP12 are used to test the AC input to the supply. These test points should measure approximately 16.5 VAC. You should test the DC output of this rectifier assembly at TP13, measured with a ground reference. This reading should be from 8.5 VDC to 11 VDC.

Should you find this voltage too low, you probably have a bad filter capacitor. Test this component by substitution. Dirty connectors, wire lugs, and crimp connections of any kind should also always be checked out.

You should always make all voltage tests with the power supply in the cabinet, and the game should operate under full load. Otherwise, your measurements may not reflect full load problems.

If possible, make all voltage tests on the actual assembly. For instance, test for the 8.5 to 11 VDC on the game PCB input or on the Regulator/Audio PCB assembly, if the game has this board. If the latter is the case, test the voltages needed to run the game PCB on **the game PCB.** This board has special test points provided for this purpose.

G. CLEANING THE PRINTED-CIRCUIT BOARD

Occasionally, a PCB will be asked to perform under conditions above and beyond the call of duty. They usually cannot operate while covered with beer, Coke, pizza, juice or metal particles from control assemblies.

If you find this condition, your first step should be to remove the PCB from the game and give it a thorough soaking with any general non-abrasive household cleaner, such as Formula 409. Brush and scrub the PCB if necessary. Remove any ICs from their sockets; clean and rinse the board and ICs thoroughly. Be careful of any mod wires which might exist.

After washing the PCB, thoroughly dry it with compressed air, a heat gun or blow dryer. **Insure that it is COMPLETELY DRY before applying power!** We do NOT recommend that you do this cleaning procedure if the board has light-emitting diodes or fluorescent 7-segment displays.

You should also be careful of getting components, such as large filter capacitors wet, as they may leak and cause problems later on. If in doubt, remove them before cleaning the PCB.

Troubleshooting Games Cont.

H. MECHANICAL HARDWARE AND ITS ADJUSTMENTS

1. Gear Shifter Assembly

What we will discuss in this section is typical problems found in gear shifter assemblies that were first used in the Trak 10 and Formula K games.

The most frequent failure is a broken shift housing. You can help this problem by strapping two radiator hose clamps around the housing. Place them approximately one-third from each end of the housing. This will add stiffness so they last longer in abusive locations.

As Night Driver and Sprint 2 became popular, a new problem came up. The aluminum shifter rivets (used as switch actuators) began to mushroom and stick. This requires trimming them occasionally to keep the game working. These rivets have been replaced with steel ones to reduce maintenance time.

Recent changes in shifter design have improved reliability and lowered maintenance time. See Figures 9 and 10 for details on the old and new style of gear shifter.

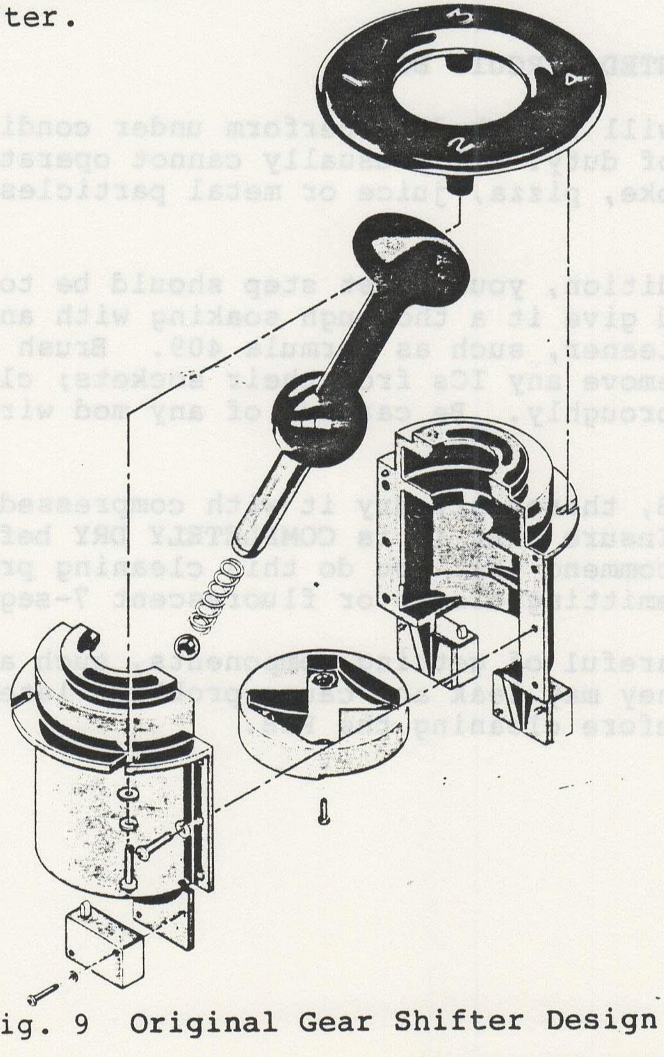

Fig. 9 Original Gear Shifter Design

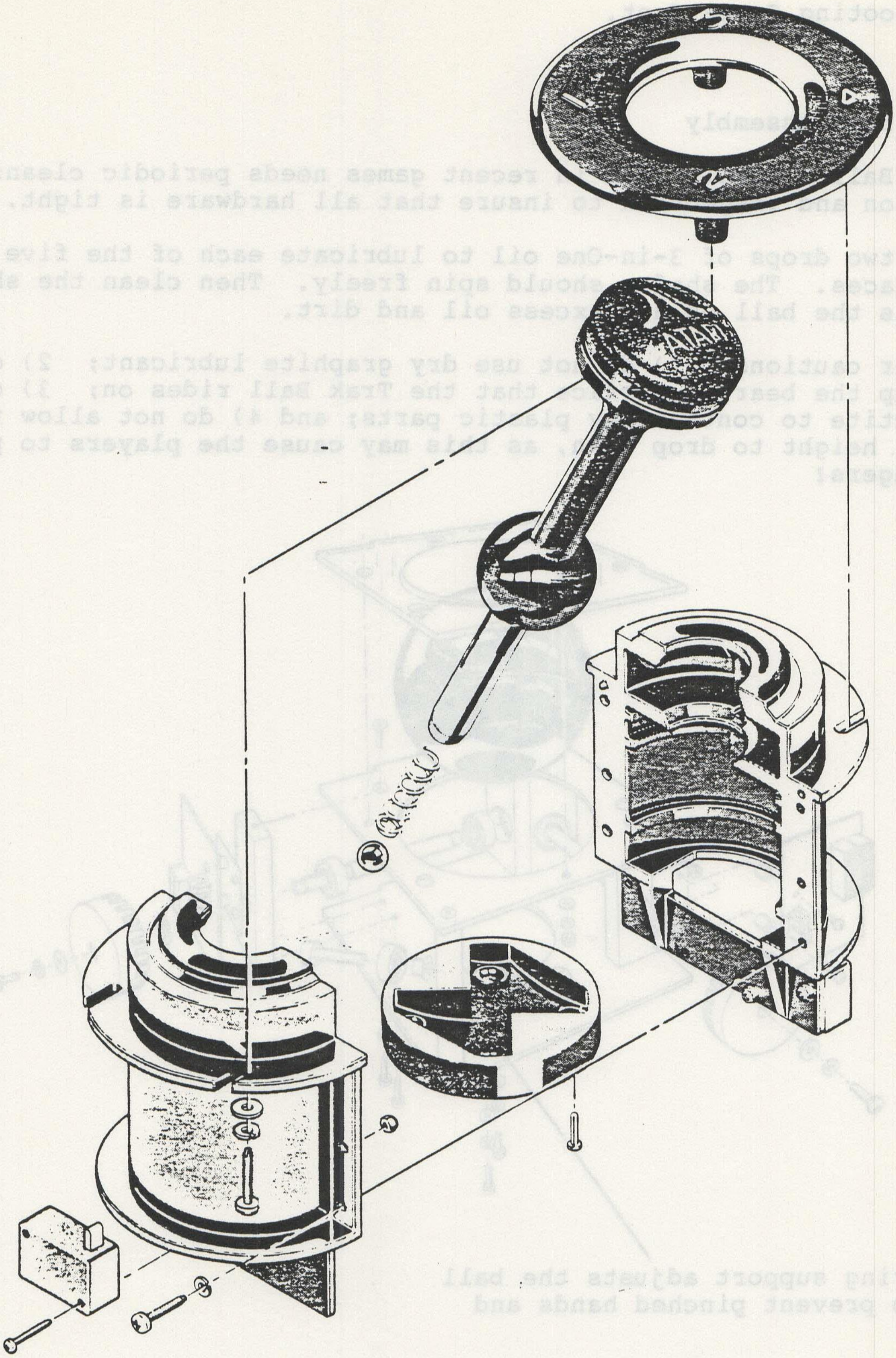

Fig. 10 New Gear Shifter Design

Troubleshooting Games Cont.

2. Trak Ball Assembly

The Trak Ball assembly used in recent games needs periodic cleaning, lubrication and inspection to insure that all hardware is tight.

Use only two drops of 3-in-One oil to lubricate each of the five bearing races. The shafts should spin freely. Then clean the shafts as well as the ball of all excess oil and dirt.

Some other cautions: 1) do not use dry graphite lubricant; 2) do not roughen up the bearing surface that the Trak Ball rides on; 3) do not allow Loctite to contact any plastic parts; and 4) do not allow the Trak Ball height to drop down, as **this may cause the players to pinch their fingers!**

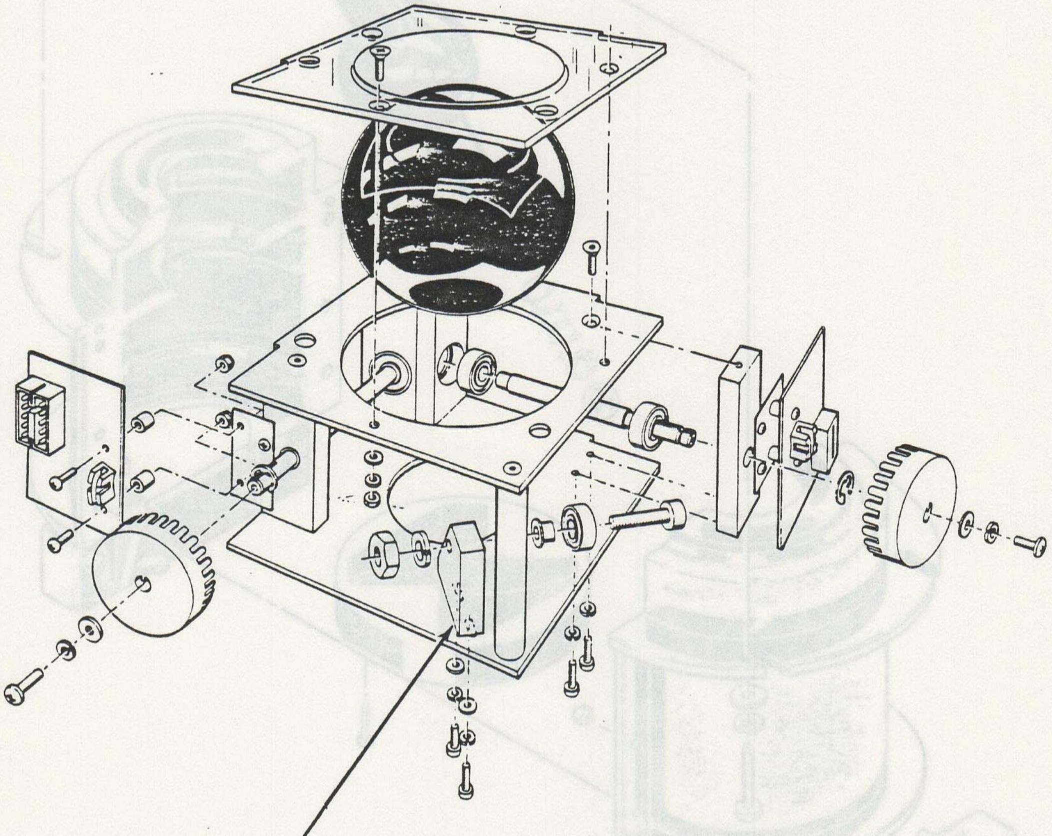

This bearing support adjusts the ball height to prevent pinched hands and fingers.

Fig. 11 **Trak Ball Assembly**

Troubleshooting Games Cont.

3. Two-Speed Shifter

Because of the nature of this control, it undergoes severe stress and vibration. Therefore, you should secure all screws with Loctite glue. To maintain the control, you should lubricate the switch activator and shift handle pivot pin with light silicone grease.

This type of shifter was used in Sprint 8, Destroyer, Starship 1, and Sky Raider.

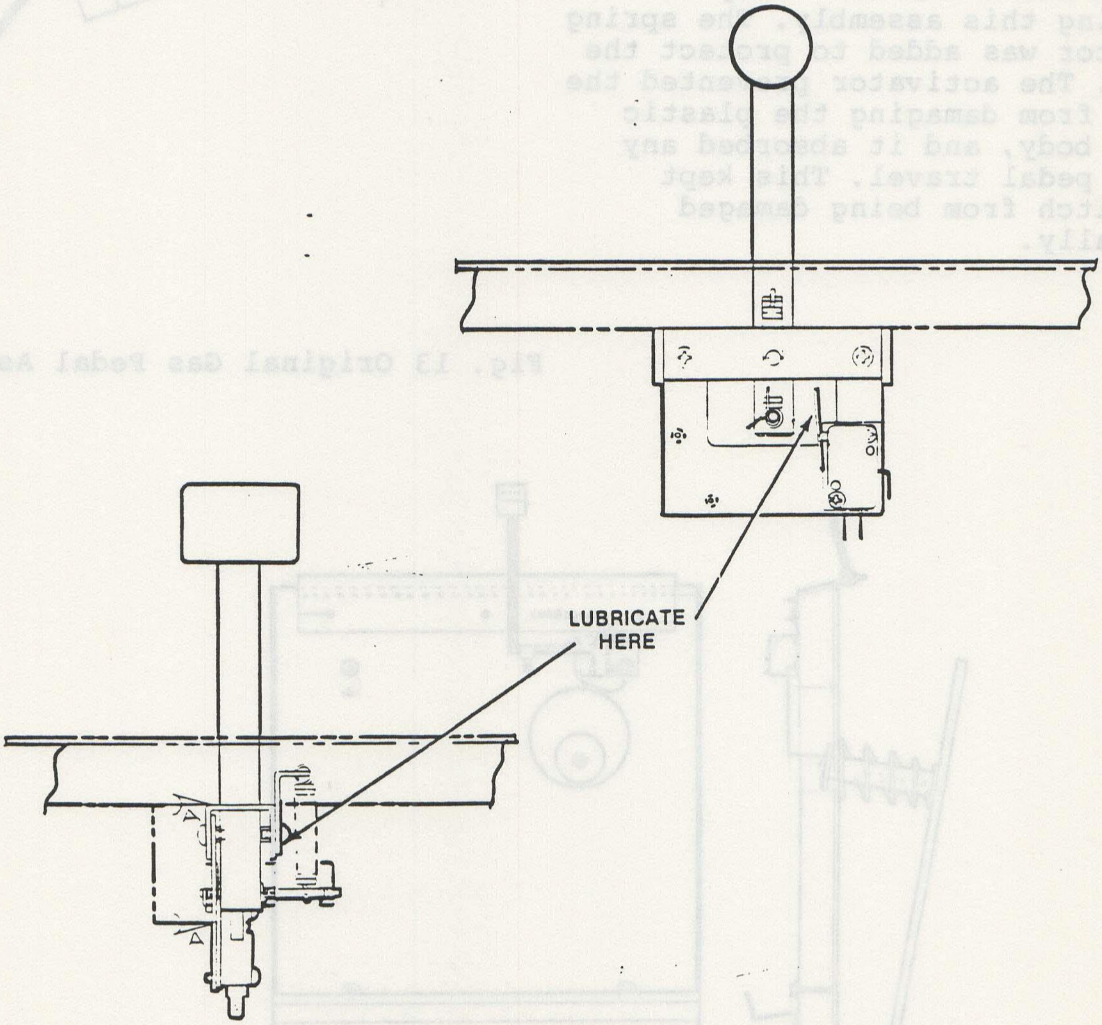

Fig. 12 Two-Speed Shifter

Troubleshooting Games Cont.

4. Gas Pedal Control

Fig. 13 shows the first gas pedal design from Atari. A beryllium spring was used to activate the switch.

This design was improved first by using the washer (1) to activate the switch. Later we found that the rubber bumper(2) would allow the washer to overtravel and damage the microswitch.

Fig. 14 shows the next step in improving this assembly. The spring activator was added to protect the switch. The activator prevented the washer from damaging the plastic switch body, and it absorbed any excess pedal travel. This kept the switch from being damaged internally.

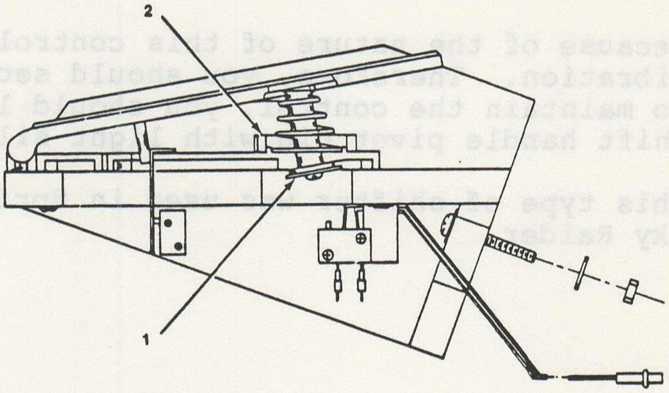

Fig. 13 Original Gas Pedal Assembly

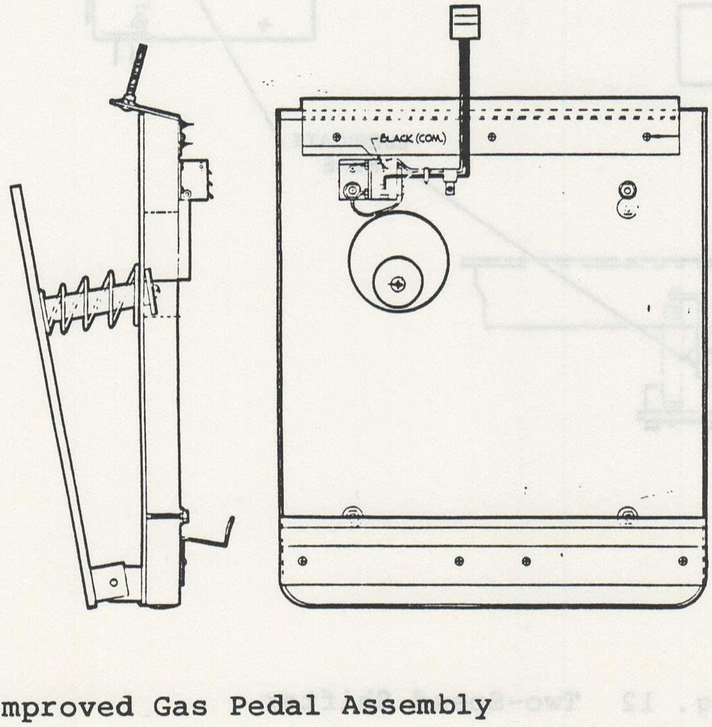

Fig. 14 Improved Gas Pedal Assembly

Troubleshooting Games Cont.

4. Gas Pedal Control (Cont.)

Figure 15 shows the newest gas pedal assembly (introduced in early 1980). Notice that the microswitch activator has been changed to a spring, to prevent flexing sideways. This keeps the activator from slipping off the washer (3).

Also notice the hinge location: it has been moved from the player's heel to the toe area. This relieves stress on the hinge pin, resulting in longer assembly life.

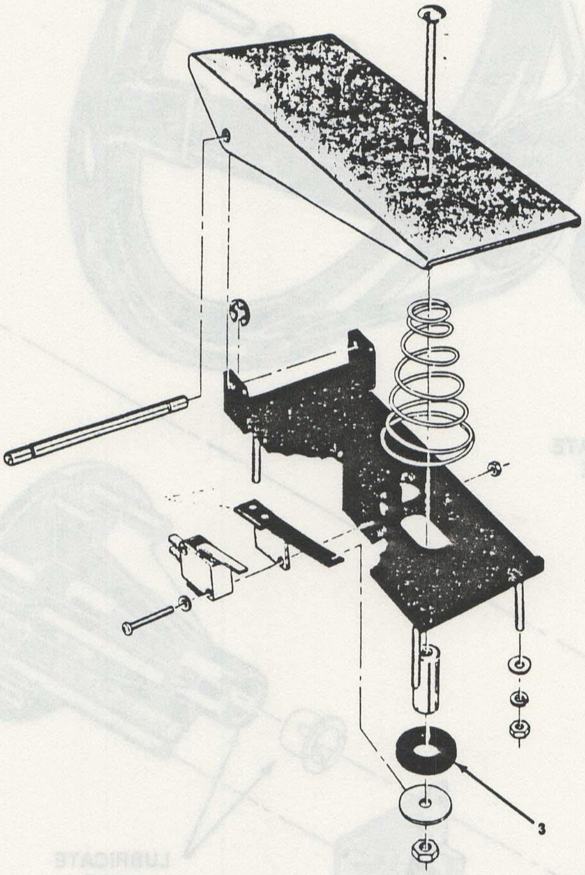

Fig. 15 New Foot Pedal Control

roubleshooting Games Cont.

5. Steering Wheel Assembly

The steering assembly is basically trouble-free. However, it does require periodic cleaning and lubrication with a light silicone grease. Apply this lubricant to the steering shaft and bearings.

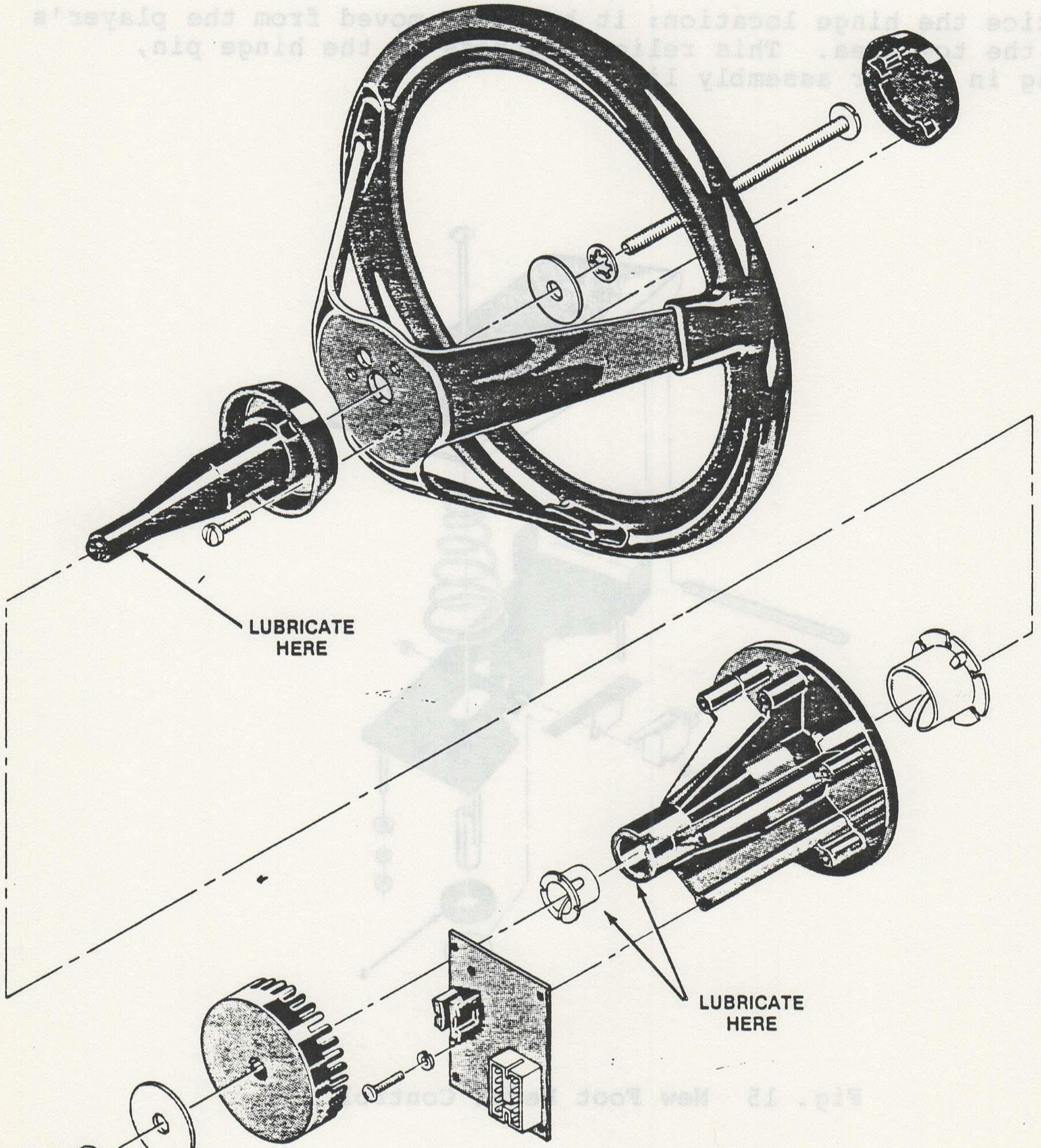

Fig. 16 Steering Wheel Assembly

Troubleshooting Games Cont.

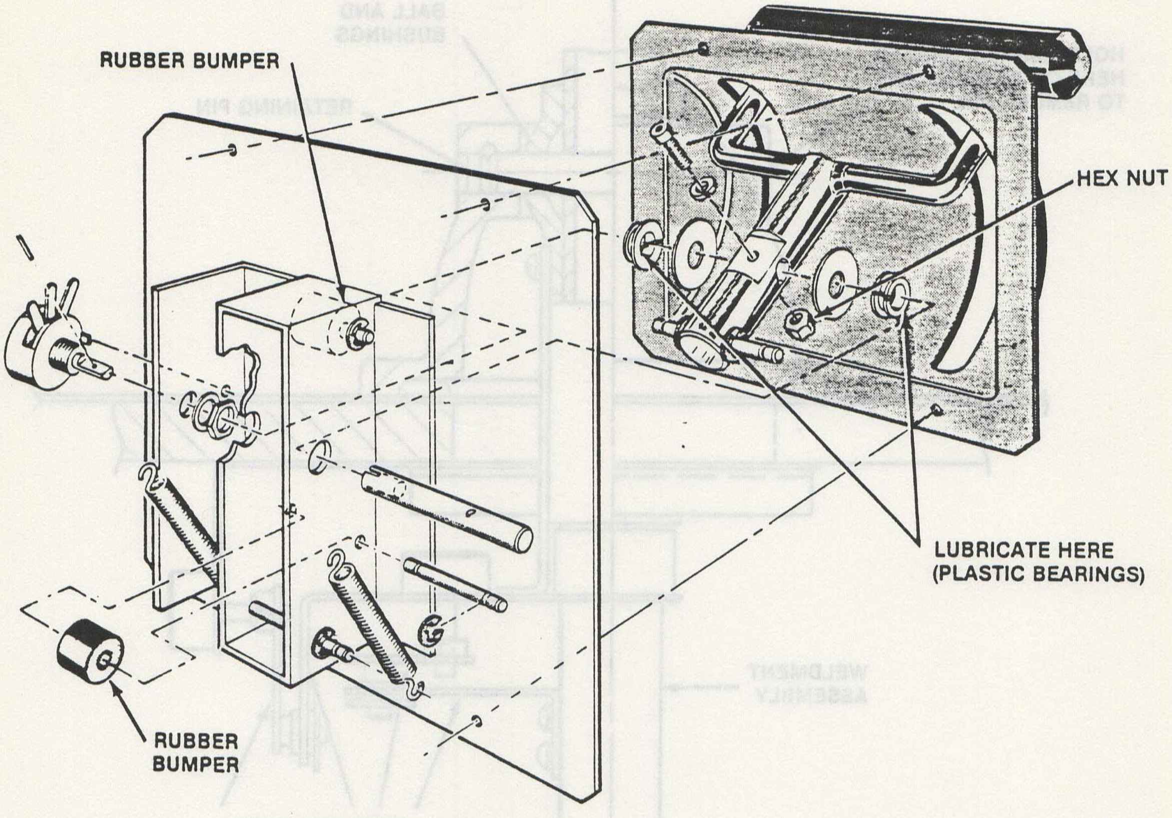
RUBBER BUMPER
HEX NUT
LUBRICATE HERE
(PLASTIC BEARINGS)
RUBBER BUMPER

Fig. 17 Thrust Control Assembly

6. Thrust Control Assembly

This assembly was first used in the Lunar Lander game, and has proved to be very reliable. It requires only periodic lubrication with a light silicone grease.

Apply this grease to the plastic bearings. Also check that the rubber bumpers have not been damaged. When assembling this unit, apply a drop of Loctite to the hex nut. This will keep the nut from vibrating loose. As an alternative you can replace it with a self-locking type of nut.

Troubleshooting Games Cont.

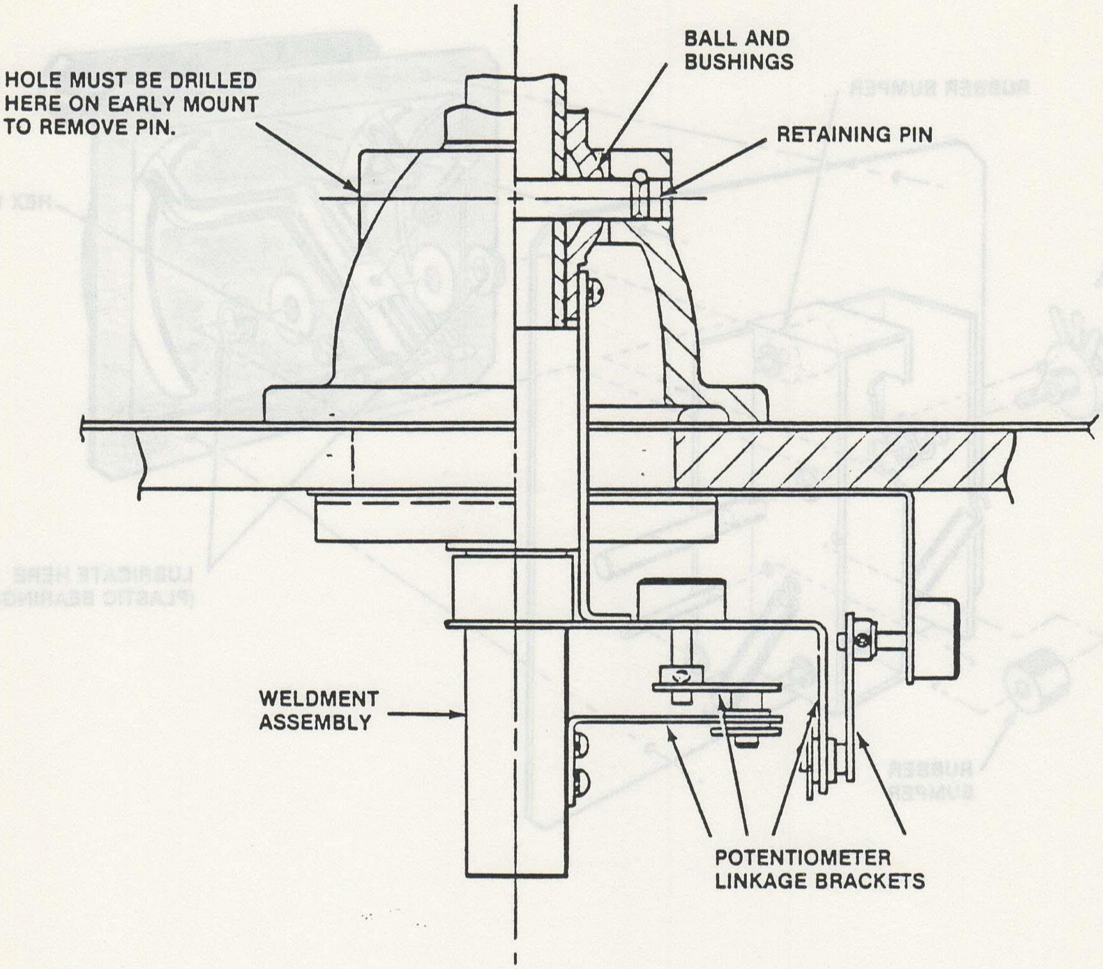
HOLE MUST BE DRILLED HERE ON EARLY MOUNT TO REMOVE PIN.
BALL AND BUSHINGS
RETAINING PIN
WELDMENT ASSEMBLY
POTENTIOMETER LINKAGE BRACKETS

Fig. 18 Gun Assembly

7. Gun Assembly, Flight Control Assembly

This assembly was used as a flight control in Starship 1 and Sky Raider, and as a gun in Triple Hunt. The control requires periodic inspection and lubrication to extend its useful life.

Its weak point is the retaining pin (see Figures 18 and 19). When this pin wears, it allows the potentiometer linkage brackets to overtravel, causing them to deform. This bending will eventually cause control failure.

To replace this pin on early models, the gun mount must be drilled on one side. This will provide access for using a punch to remove the retaining pin.

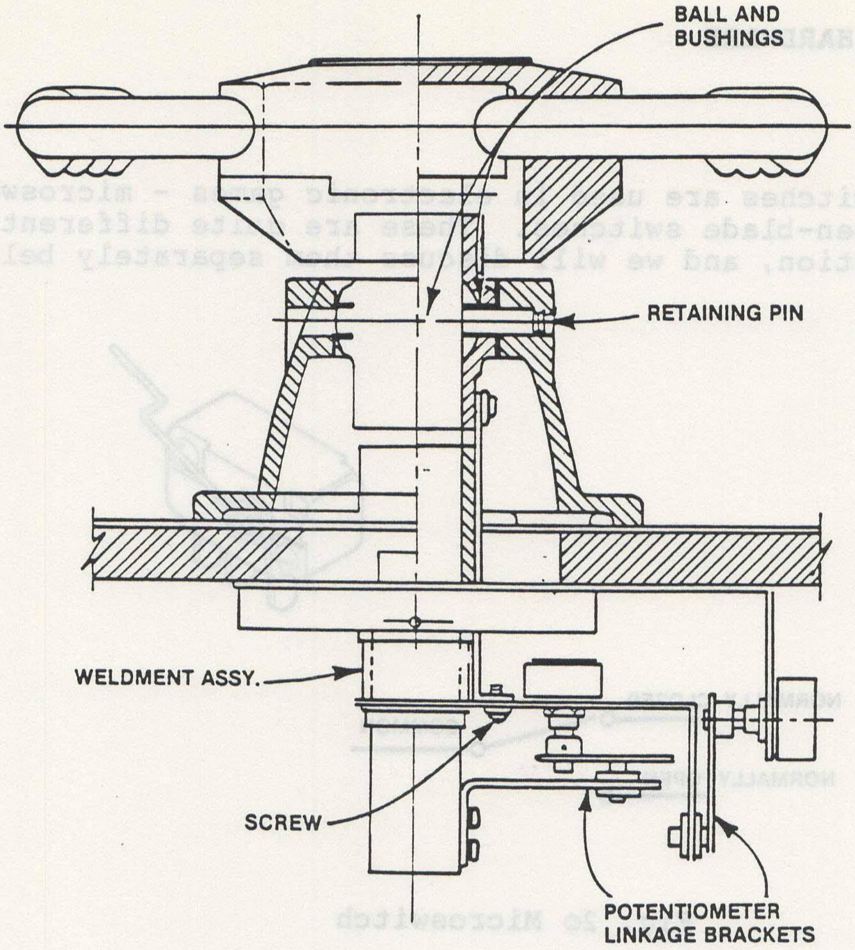

Fig. 19 Flight Control Assembly

Inspect the weldment assembly near the oval retaining-pin hole. Should this hole become enlarged, it, too, can cause the potentiometer linkage brackets to distort and break.

When you reassemble this control, you should lubricate the retaining pin, the weldment assembly, and the ball and bushing assembly with a light silicone grease. Also be sure to use hardened screws to mount all potentiometer linkage brackets. Use Loctite to eliminate loosening due to vibration.

To replace the pushbutton fire control, first remove the hand grip. (This will destroy the grip, since a permanent glue was used to mount the hand grip.) Then remove the set screw. While you are doing this, you can also prevent future problems by inspecting the fire button harness for insulation wear. The most likely point of wear is near the retaining-pin hole.

When replacing potentiometers or linkage arms, tighten the screw only after you are sure that the linkages will move freely from one extreme to the other.

Troubleshooting Games Cont.

I. ELECTRICAL HARDWARE

1. Switches

Two types of switches are used in electronic games - microswitches and open-leaf or open-blade switches. These are quite different in their design and function, and we will discuss them separately below.

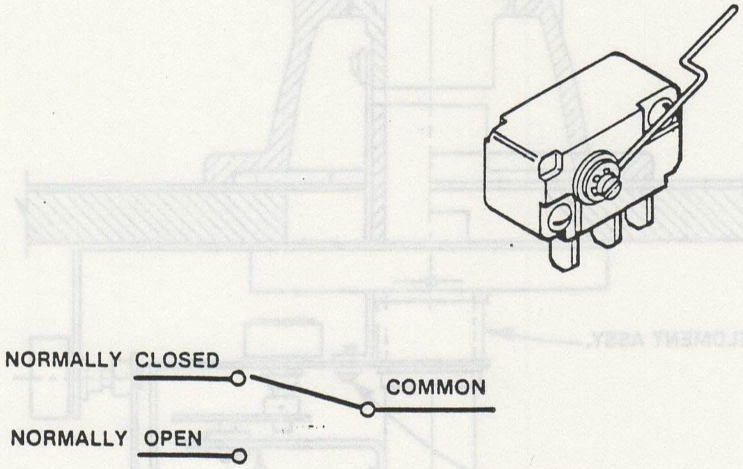

Fig. 2o Microswitch

Microswitches: These usually don't need any adjustment. In applications such as end-of-stroke switches and motor stops where adjustment is necessary, you should note that they have a snap action. This means the switch actuator must travel some predetermined distance before it clocks on. Also, before it clocks off, it must travel a proportional distance.

Mechanically, this type is superior to an open-leaf switch because it is enclosed and will usually need much less service. However, it also has some limitations. The range of adjustment is limited by its snap action. This can reduce the feel of a pinball or similar game, that would need some switches set to very close tolerances.

The top illustration shows a typical microswitch; just below it is its schematic symbol. This symbol is always drawn in its normal position in the game - before it is activated by the player. A pushbutton-type microswitch uses the same symbol as the lever-actuated switch.

Troubleshooting Games Cont.

Open-Blade Switches: The second type of switch is widely used in the game industry. The major advantage of this type is its wide range of possible adjustments and its lack of snap action. In addition, the contacts are easily cleaned, making it more serviceable in most applications.

Adjustment of these switches requires only that the contacts wipe or rub against each other to keep them clean. When you adjust these switches, **take care to never put a sharp bend in the blades.** The switch blades should be radiused or gently curved to maintain adjustment. A sharp bend or kink in the spring blades will cause the switch to fall out of adjustment much more frequently.

To be self-cleaning, when this type of switch is used, the actuating blade must rock the contact back and forth. In other words, the contacts must move out of alignment or rub against each other (refer to Figure 21 below).

On switches with gold-plated contacts, you should **never use** a rough cleaning tool such as a file or burnisher: this will remove the gold plating, and ruin the conductive surface. Instead, use a clean business card or something similar to clean the gold contacts.

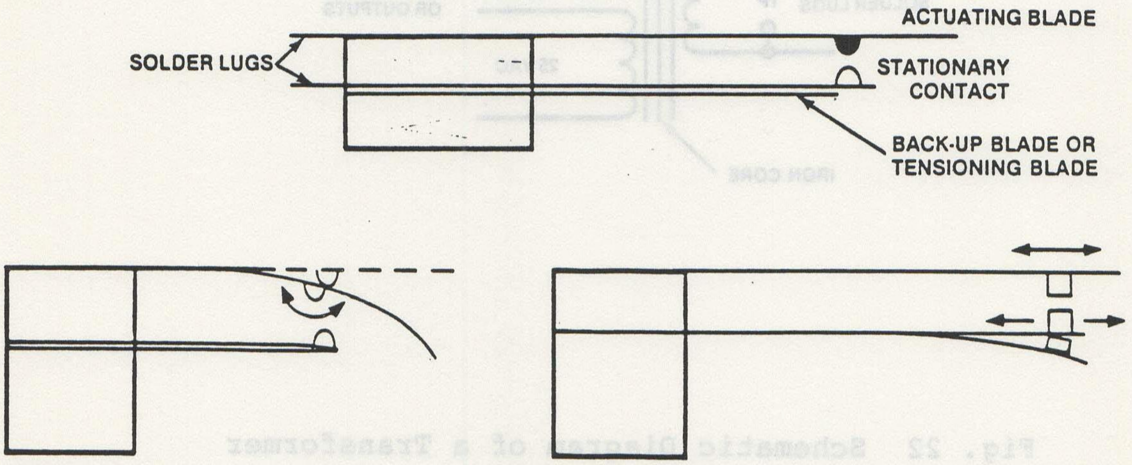

ROCKING ACTION ON FLEXIBLE ACTUATOR BLADES

RUBBING ACTION ON STIFF ACTUATOR BLADES

Fig. 21 Proper Functioning of Open-Blade Switches

Troubleshooting Games Cont.

2. Transformers

Transformers are used in games to lower the AC line voltage from 115 or 220 VAC to some lower voltage such as 16.5 or 25 VAC. The schematic symbol for this part is shown to the right.

Transformers in electronic games are normally very reliable. When properly fused, they should last indefinitely. If you make voltage tests on transformers, measure across the winding, not in reference to ground.

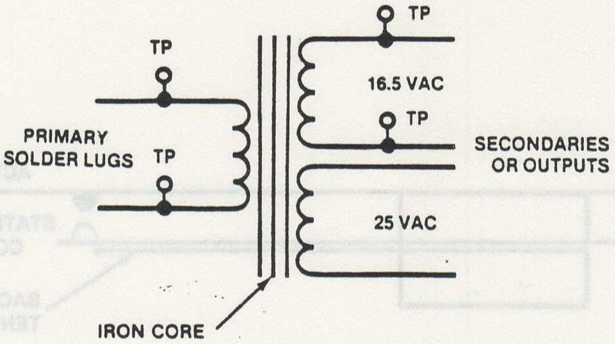
TP
TP
TP
TP
16.5 VAC
PRIMARY SOLDER LUGS
SECONDARIES OR OUTPUTS
25 VAC
IRON CORE

Fig. 22 Schematic Diagram of a Transformer

Troubleshooting Games Cont.

3. Potentiometers

A potentiometer or "pot" is nothing more than an adjustable resistor. You should note that this type of part will not always look the same. Normally they have three legs or solder lugs. In most cases, the two outside legs are connected as shown below, and the wiper is in the center.

In some cases, the wiper may be moved over to one side instead of in the center, as shown below. When this occurs, the pot will always be marked to indicate this change from the norm. For more information on potentiometers refer to Section 3, Page 72 Variable Resistors.

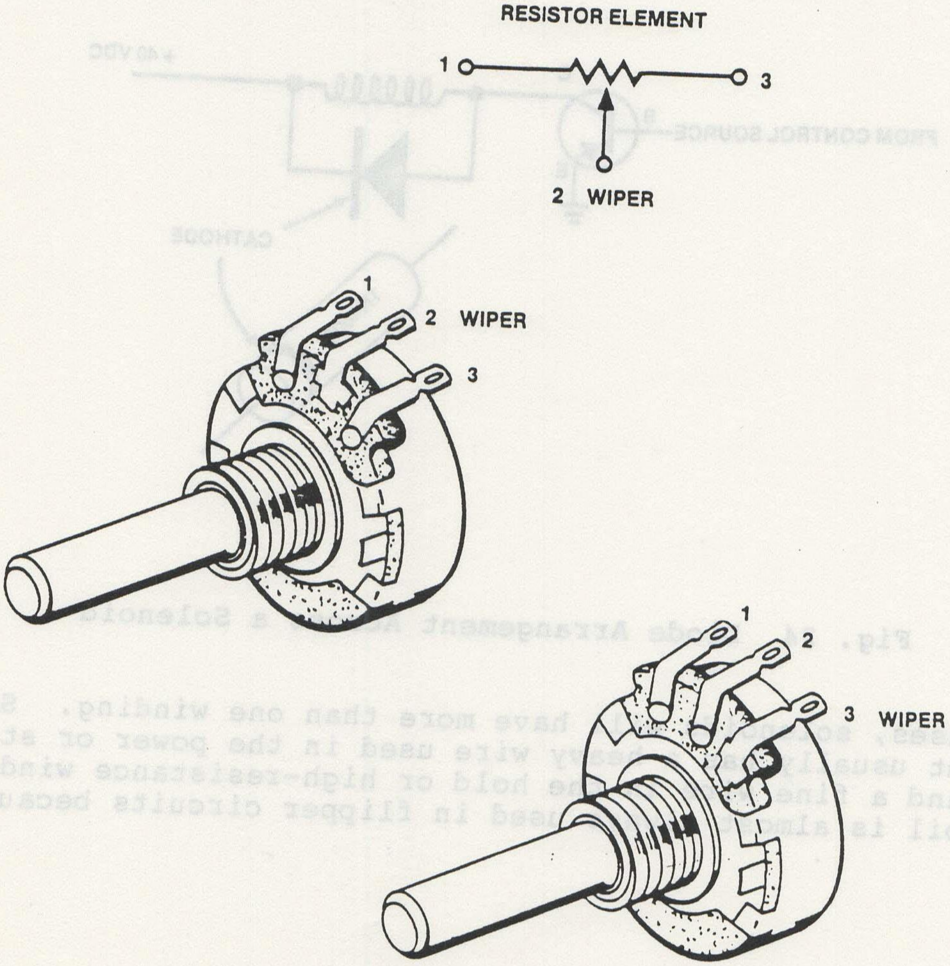

Fig. 23 Potentiometers

Troubleshooting Games Cont.

4. Solenoids

Solenoids are coils of wire used as electromagnets. You will find them in relays and parts where very simple motions occur. Flipper mechanisms or coin counters, for example, need only momentary motion - which can be provided by a coil or solenoid.

When a coil is turned on and off by a driver transistor, you will usually find a damping diode across the coil to suppress any large voltage spikes. (These are generated when the coil turns off.) The cathode end of the diode - the end with the band - always goes towards the positive supply voltage, as shown in Figure 24.

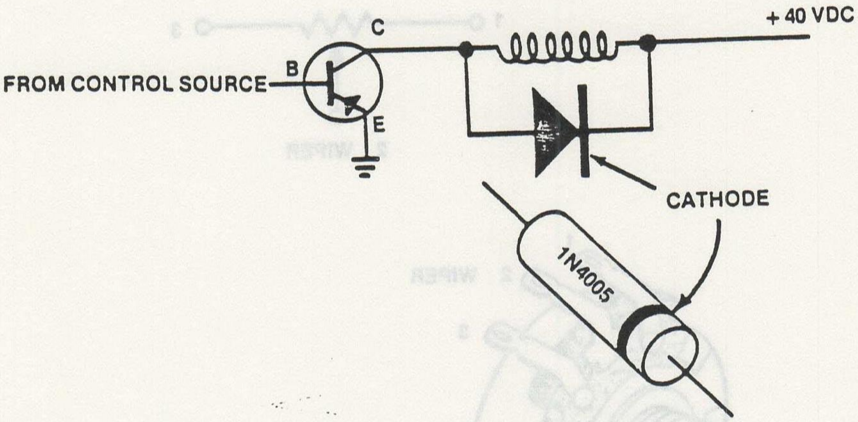

Fig. 24 Diode Arrangement Across a Solenoid

In some cases, solenoids will have more than one winding. Such an arrangement usually has a heavy wire used in the power or start winding, and a fine wire in the hold or high-resistance winding. This type of coil is almost always used in flipper circuits because players

Troubleshooting Games Cont.

tend to capture the ball and hold the flipper assembly on. The fine wire provides current limiting, in order to prevent the coil from overheating and burning up.

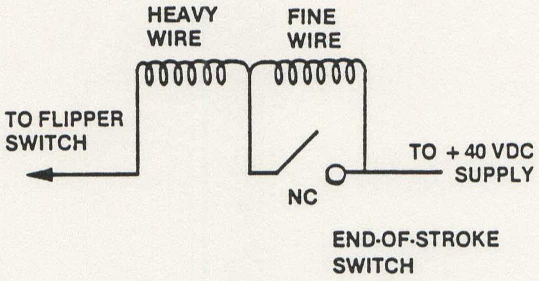
HEAVY WIRE
FINE WIRE
TO FLIPPER SWITCH
TO +40 VDC SUPPLY
NC
END-OF-STROKE SWITCH

FIGURE 25 **Double-Wound Solenoid**

Flipper coils will almost always have end-of-stroke switches: these take over the function of the fine windings until the coil is turned on. At the end of the flipper stroke this switch is opened, increasing the resistance of the coil. This resistance, in turn, limits the current flowing in the circuit.

SYM	ECO NO.	REVISIONS DESCRIPTION	DATE	APPROVED
B				
C	0460	J1 WAS CHANGED FROM P/N 530-0016 TO P/N 530-0021	6/2/80	JMJ
D	0533	ADDED MIC HOOK-UP TO DWG. IN ZONE D-2	9/25/80	JMJ
E	0837	ADDED W2 JUMPER IN ZONE B8- USED ON -20 VERSION ONLY.	7/27/8	RH
F	1629	REMOVED NOTES	4-13 83	Dang

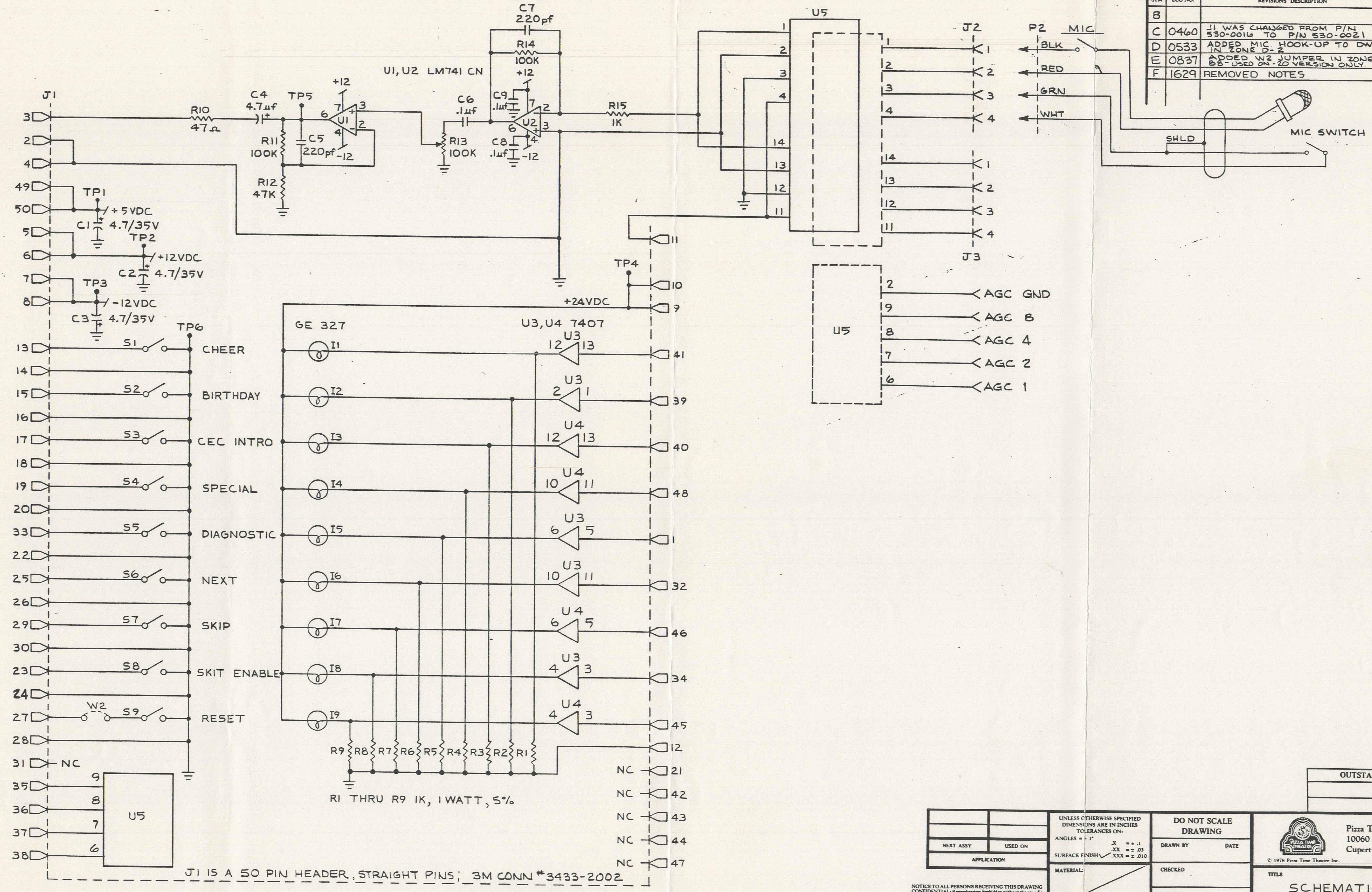
J1
3
2
4
49
50
5
6
7
8
13
14
15
16
17
18
19
20
33
22
25
26
29
30
23
24
27
28
31
NC
35
36
37
38
R10
47Ω
C4
4.7µf
TP5
+12
U1
-12
R11
100K
C5
220pf
R12
47K
U1, U2 LM741 CN
C7
220pf
R14
100K
C6
.1µf
R13
100K
C9
.1µf
C8
.1µf
U2
R15
1K
TP1
+5VDC
C1
4.7/35V
TP2
+12VDC
C2
4.7/35V
TP3
-12VDC
C3
4.7/35V
TP6
S1
CHEER
S2
BIRTHDAY
S3
CEC INTRO
S4
SPECIAL
S5
DIAGNOSTIC
S6
NEXT
S7
SKIP
S8
SKIT ENABLE
W2
S9
RESET
GE 327
I1
I2
I3
I4
I5
I6
I7
I8
I9
TP4
+24VDC
U3, U4 7407
U3
U4
R9 R8 R7 R6 R5 R4 R3 R2 R1
R1 THRU R9 1K, 1 WATT, 5%
11
10
9
41
39
40
48
1
32
46
34
45
12
NC 21
NC 42
NC 43
NC 44
NC 47
U5
J2
J3
P2
MIC
BLK
RED
GRN
WHT
SHLD
MIC SWITCH
AGC GND
AGC 8
AGC 4
AGC 2
AGC 1
J1 IS A 50 PIN HEADER, STRAIGHT PINS; 3M CONN #3433-2002

OUTSTANDING ECNs

NEXT ASSY	USED ON
APPLICATION	

UNLESS OTHERWISE SPECIFIED DIMENSIONS ARE IN INCHES TOLERANCES ON:
ANGLES = ± 1°
.X = ± .1
.XX = ± .03
.XXX = ± .010
SURFACE FINISH ✓

MATERIAL:

FINISH:

DO NOT SCALE DRAWING

DRAWN BY
DATE

CHECKED

ENGINEER
A.G.G Alfie 9/24/79

PROJECT ENGINEER

MFG ENGINEER

Pizza Time Theatre Inc.
10060 Bubb Road
Cupertino, CA 95014

© 1978 Pizza Time Theatre Inc.

TITLE
SCHEMATIC
CONTROL CONSOLE

SIZE D
DRAWING NO. 008-0007-01
REV F
SCALE NONE
SHEET 1 OF 1

NOTICE TO ALL PERSONS RECEIVING THIS DRAWING CONFIDENTIAL: Reproduction Forbidden without the specific written permission of Pizza Time Theatre Inc. of Cupertino, California. This drawing is only conditionally issued, and neither receipt nor possession thereof confers or transfers any right in, or license to use, the subject matter of the drawing or any design or technical information shown thereon, nor any right to reproduce this drawing or any part thereof, except for manufacture by vendors for Pizza Time Theatre Inc. and for manufacture under the corporation's written license, no right to reproduce this drawing is granted or the subject matter thereof unless by written agreement with or written permission from the corporation.

BISHOP GRAPHICS ACCUPRESS REORDER NO. A-5497

SYM	ECO NO.	REVISIONS DESCRIPTION	DATE	APPROVED
A	1208	PRODUCTION RELEASE	4/15/82	

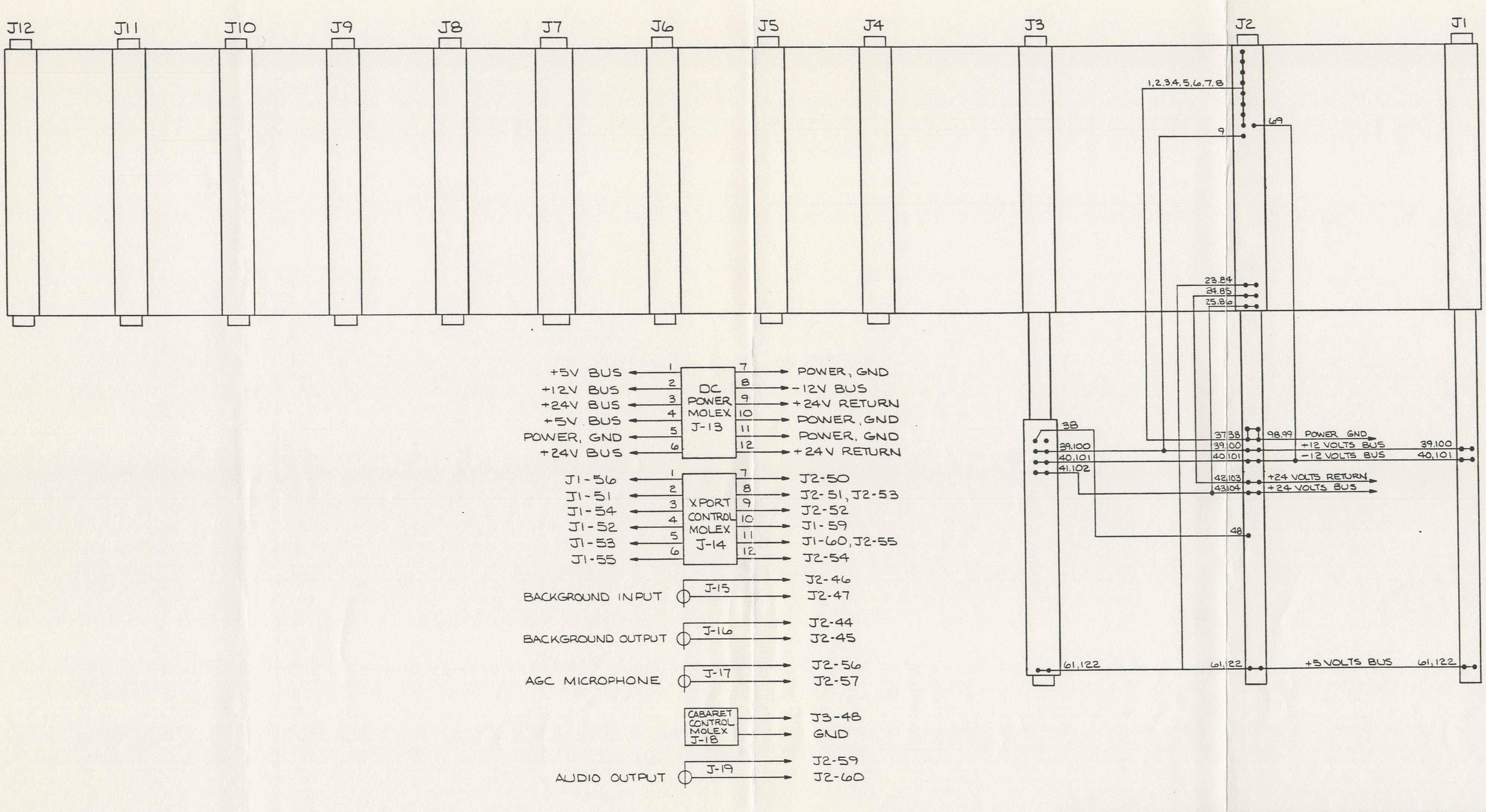
J12
J11
J10
J9
J8
J7
J6
J5
J4
J3
J2
J1
1,2,3,4,5,6,7,8
9
69
23,84
24,85
25,86
38
39,100
40,101
41,102
37,38
39,100
40,101
42,103
43,104
98,99
POWER GND
+12 VOLTS BUS
-12 VOLTS BUS
+24 VOLTS RETURN
+24 VOLTS BUS
39,100
40,101
48
61,122
61,122
+5 VOLTS BUS
61,122
+5V BUS
+12V BUS
+24V BUS
+5V BUS
POWER, GND
+24V BUS
1
2
3
4
5
6
DC POWER MOLEX J-13
7
8
9
10
11
12
POWER, GND
-12V BUS
+24V RETURN
POWER, GND
POWER, GND
+24V RETURN
J1-56
J1-51
J1-54
J1-52
J1-53
J1-55
XPORT CONTROL MOLEX J-14
J2-50
J2-51, J2-53
J2-52
J1-59
J1-60, J2-55
J2-54
BACKGROUND INPUT
J-15
J2-46
J2-47
BACKGROUND OUTPUT
J-16
J2-44
J2-45
AGC MICROPHONE
J-17
J2-56
J2-57
CABARET CONTROL MOLEX J-18
J3-48
GND
AUDIO OUTPUT
J-19
J2-59
J2-60

OUTSTANDING ECNs	

NEXT ASSY	USED ON
APPLICATION	

UNLESS OTHERWISE SPECIFIED
DIMENSIONS ARE IN INCHES
TOLERANCES ON:
ANGLES = ± 1°
.X = ± .1
.XX = ± .03
SURFACE FINISH ✓ .XXX = ± .010
MATERIAL:
FINISH:

DO NOT SCALE DRAWING
DRAWN BY L. FORTE DATE 4/14/82
CHECKED C JORGENSEN 4/15/82
ENGINEER
PROJECT ENGINEER
MFG ENGINEER C JORGENSEN 4/15/82

Chuck E. Cheese's Pizza Time Theatre
Pizza Time Theatre Inc.
1213 Innsbruck Dr.
Sunnyvale, CA 94086

c 1978 Pizza Time Theatre Inc.

TITLE BACKPLANE - SCHEMATIC
SIZE D
DRAWING NO. 08-0032
REV A
SCALE NONE
SHEET 1 OF 1

NOTICE TO ALL PERSONS RECEIVING THIS DRAWING
CONFIDENTIAL: Reproduction Forbidden without the specific written permission of Pizza Time Theatre Inc. of Sunnyvale, California. This drawing is only conditionally issued, and neither receipt nor possession thereof confers or transfers any right in, or license to use, the subject matter of the drawing or any design or technical information shown thereon, nor any right to reproduce this drawing or any part thereof, except for manufacture by vendors for Pizza Time Theatre Inc. and for manufacture under the corporation's written license, no right to reproduce this drawing is granted or the subject matter thereof unless by written agreement with or written permission from the corporation.

SYM	ECO NO.	REVISIONS DESCRIPTION	DATE	APPROVED
B	0808	SHORTED T1 PINS 2 TO 3 AND 6 TO 7.	6/26/81	RH

munch

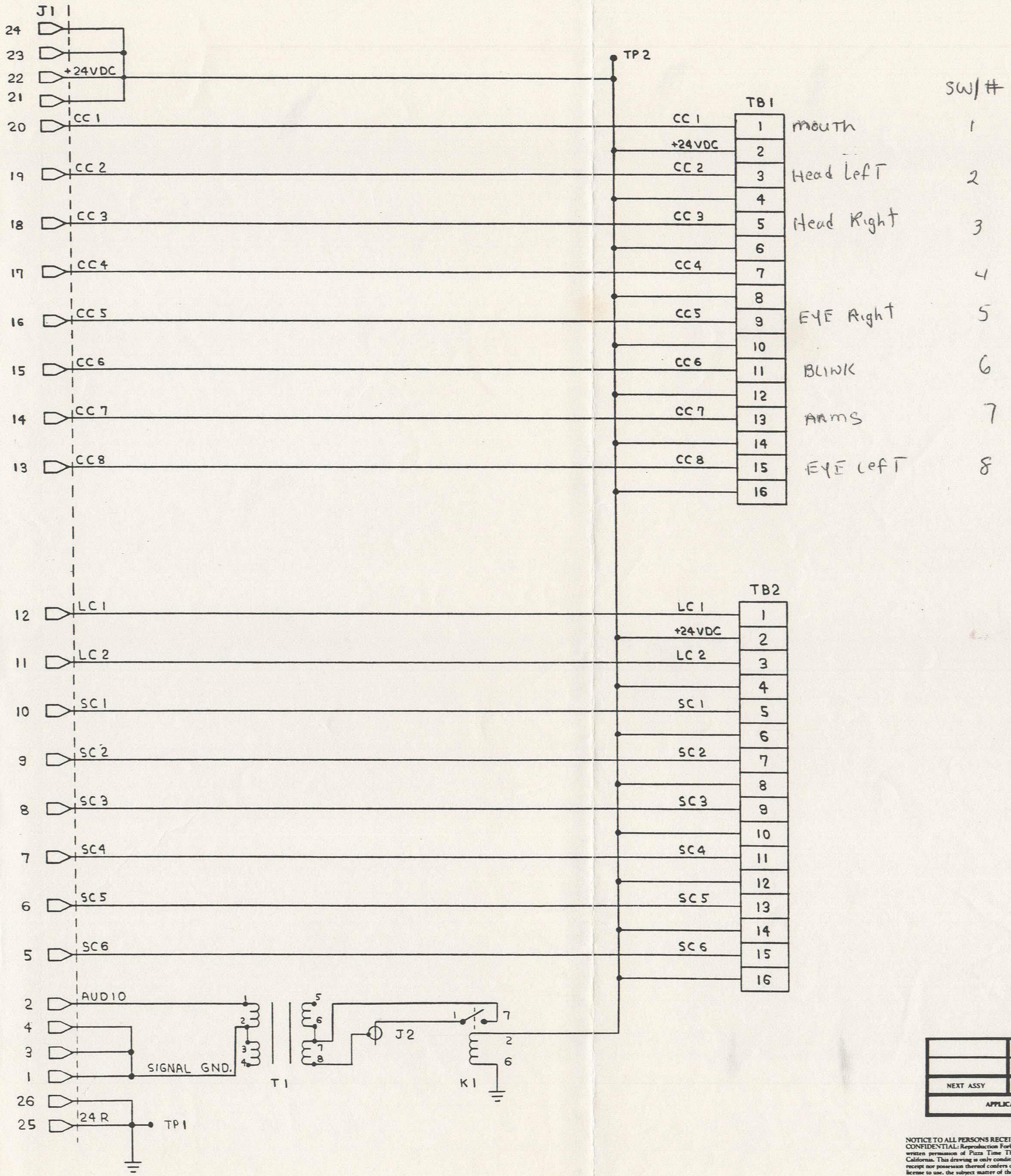
J1
24
23
22
21
+24VDC
20
CC 1
19
CC 2
18
CC 3
17
CC4
16
CC 5
15
CC 6
14
CC 7
13
CC8
TP 2
TB1
CC 1
+24VDC
CC 2
CC 3
CC4
CC5
CC6
CC7
CC8
1
2
3
4
5
6
7
8
9
10
11
12
13
14
15
16
SW/#
mouth 1
Head Left 2
Head Right 3
4
EYE Right 5
BLINK 6
ARMS 7
EYE Left 8
12
LC 1
11
LC 2
10
SC 1
9
SC 2
8
SC 3
7
SC4
6
SC5
5
SC6
TB2
LC 1
+24VDC
LC 2
SC 1
SC 2
SC 3
SC4
SC 5
SC 6
2
AUDIO
4
3
1
SIGNAL GND.
26
25
24 R
TP 1
T1
J2
K1

OUTSTANDING ECNs

NEXT ASSY	USED ON
APPLICATION	

UNLESS OTHERWISE SPECIFIED
DIMENSIONS ARE IN INCHES
TOLERANCES ON:
ANGLES = ± 1°
.X = ± .1
.XX = ± .03
.XXX = ± .010
SURFACE FINISH ✓

MATERIAL:

FINISH:

DO NOT SCALE DRAWING

DRAWN BY
DATE

CHECKED

ENGINEER
A.G.G. Agli 9/24/79

PROJECT ENGINEER

MFG ENGINEER

Pizza Time Theatre Inc.
10060 Bubb Road
Cupertino, CA 95014

© 1978 Pizza Time Theatre Inc.

TITLE
SCHEMATIC
SOLENOID BOARD

SIZE D
DRAWING NO. 08-0005
REV B
SCALE NONE
SHEET 1 OF 1

NOTICE TO ALL PERSONS RECEIVING THIS DRAWING
CONFIDENTIAL: Reproduction Forbidden without the specific written permission of Pizza Time Theatre Inc. of Cupertino, California. This drawing is only conditionally issued, and neither receipt nor possession thereof confers or transfers any right in, or license to use, the subject matter of the drawing or any design or technical information shown thereon, nor any right to reproduce this drawing or any part thereof, except for manufacture by vendors for Pizza Time Theatre Inc. and for manufacture under the corporation's written license, no right to reproduce this drawing is granted or the subject matter thereof unless by written agreement with or written permission from the corporation.

SYM	ECO NO.	REVISIONS DESCRIPTION	DATE	APPROVED
A	0629	RELEASE TO PRODUCTION	11/13/80	

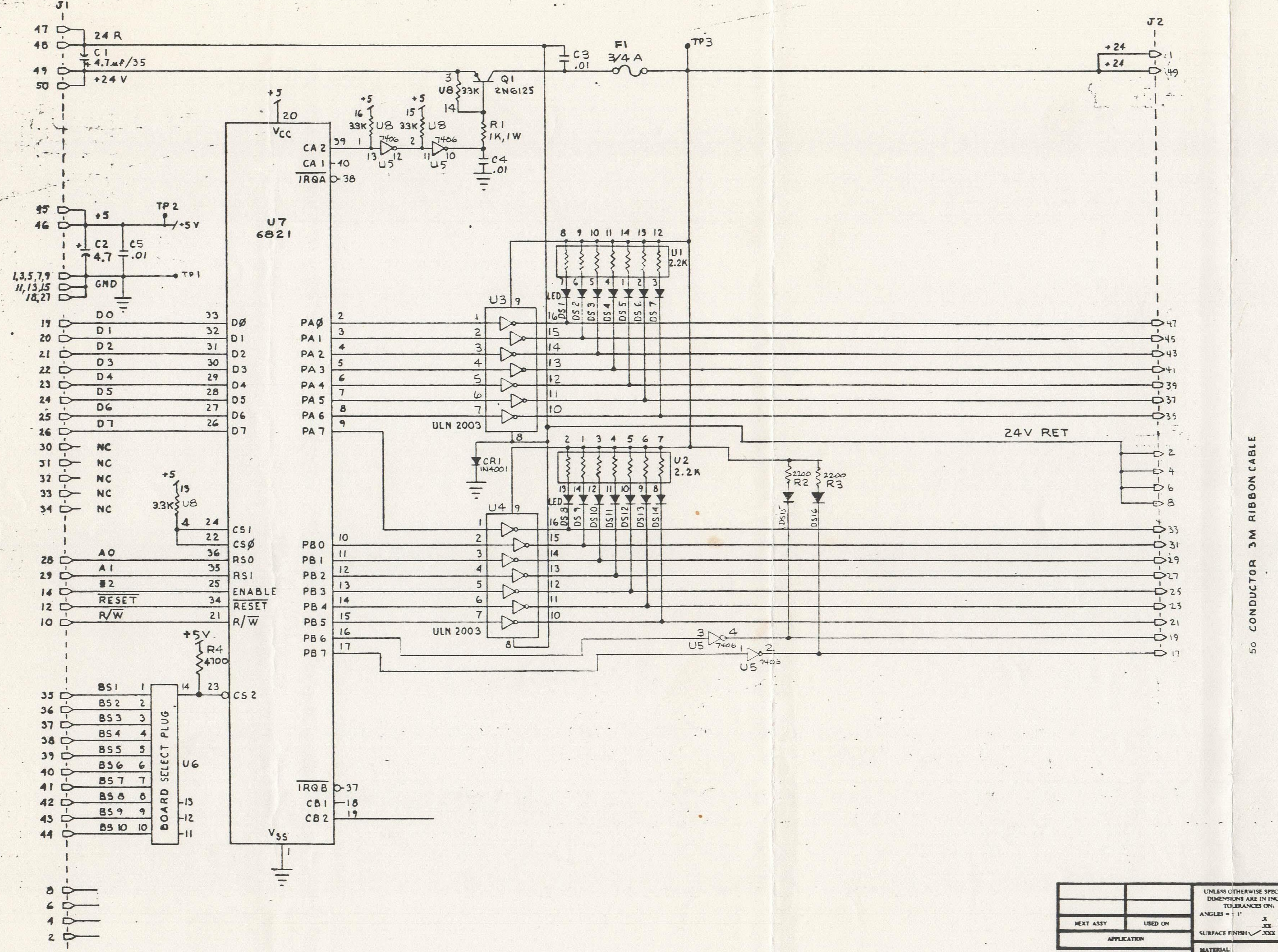
J1
47
48
49
50
24 R
C1
4.7 µf/35
+24 V
C3
.01
F1
3/4 A
TP3
J2
+24
+24
1
49
+5
20
VCC
U8
33K
3
14
Q1
2N6125
R1
1K, 1W
C4
.01
16
15
33K
7406
U5
CA 2
CA 1
IRQA
39
40
38
45
46
+5
TP 2
+5V
C2
4.7
C5
.01
1,3,5,7,9
11,13,15
18,27
GND
TP1
U7
6821
8 9 10 11 14 13 12
U1
2.2K
LED
DS 1
DS 2
DS 3
DS 4
DS 5
DS 6
DS 7
U3
ULN 2003
D0
D1
D2
D3
D4
D5
D6
D7
PA0
PA1
PA 2
PA 3
PA 4
PA 5
PA 6
PA 7
19
20
21
22
23
24
25
26
30
31
32
33
34
NC
47
45
43
41
39
37
35
24V RET
2
4
6
8
CR1
1N4001
U2
2.2K
R2
2200
R3
2200
DS 8
DS 9
DS10
DS11
DS12
DS13
DS14
DS15
DS16
U4
ULN 2003
+5
13
3.3K
U8
CS1
CS0
A0
A1
ø2
RESET
R/W
RS0
RS1
ENABLE
28
29
14
12
10
PB0
PB1
PB2
PB3
PB4
PB5
PB6
PB7
33
31
29
27
25
23
21
19
17
U5
7406
+5V
R4
4700
CS 2
BS1
BS2
BS3
BS4
BS5
BS6
BS7
BS8
BS9
BS 10
35
36
37
38
39
40
41
42
43
44
BOARD SELECT PLUG
U6
IRQB
CB1
CB2
37
18
19
VSS
50 CONDUCTOR 3M RIBBON CABLE

OUTSTANDING ECNs

NEXT ASSY	USED ON
APPLICATION	

UNLESS OTHERWISE SPECIFIED
DIMENSIONS ARE IN INCHES
TOLERANCES ON:
ANGLES = ± 1°
.X = ± .1
.XX = ± .03
SURFACE FINISH ✓ .XXX = ± .010

MATERIAL:

FINISH:

NOTICE TO ALL PERSONS RECEIVING THIS DRAWING CONFIDENTIAL: Reproduction Forbidden without the specific written permission of Pizza Time Theatre Inc. of Cupertino, California. This drawing is only conditionally issued, and neither receipt nor possession thereof confers or transfers any right in, or license to use, the subject matter of the drawing or any design or technical information shown thereon, nor any right to reproduce this drawing or any part thereof, except for manufacture by vendors for Pizza Time Theatre Inc. and for manufacture under the corporation's written license, no right to reproduce this drawing is granted or the subject matter thereof unless by written agreement with or written permission from the corporation.

DO NOT SCALE DRAWING

DRAWN BY Rus [illegible] DATE 6.10.80
CHECKED
ENGINEER [illegible] 11/13/80
PROJECT ENGINEER
MFG ENGINEER

Pizza Time Theatre Inc.
10060 Bubb Road
Cupertino, CA 95014

© 1978 Pizza Time Theatre Inc.

TITLE SCHEMATIC LIGHT DRIVER

SIZE D
DRAWING NO. 08-0021
REV A
SCALE
SHEET 1 OF 1

SYM	ECO NO.	REVISIONS DESCRIPTION	DATE	APPROVED
A	1208	PRODUCTION RELEASE	4/15/82	CJ

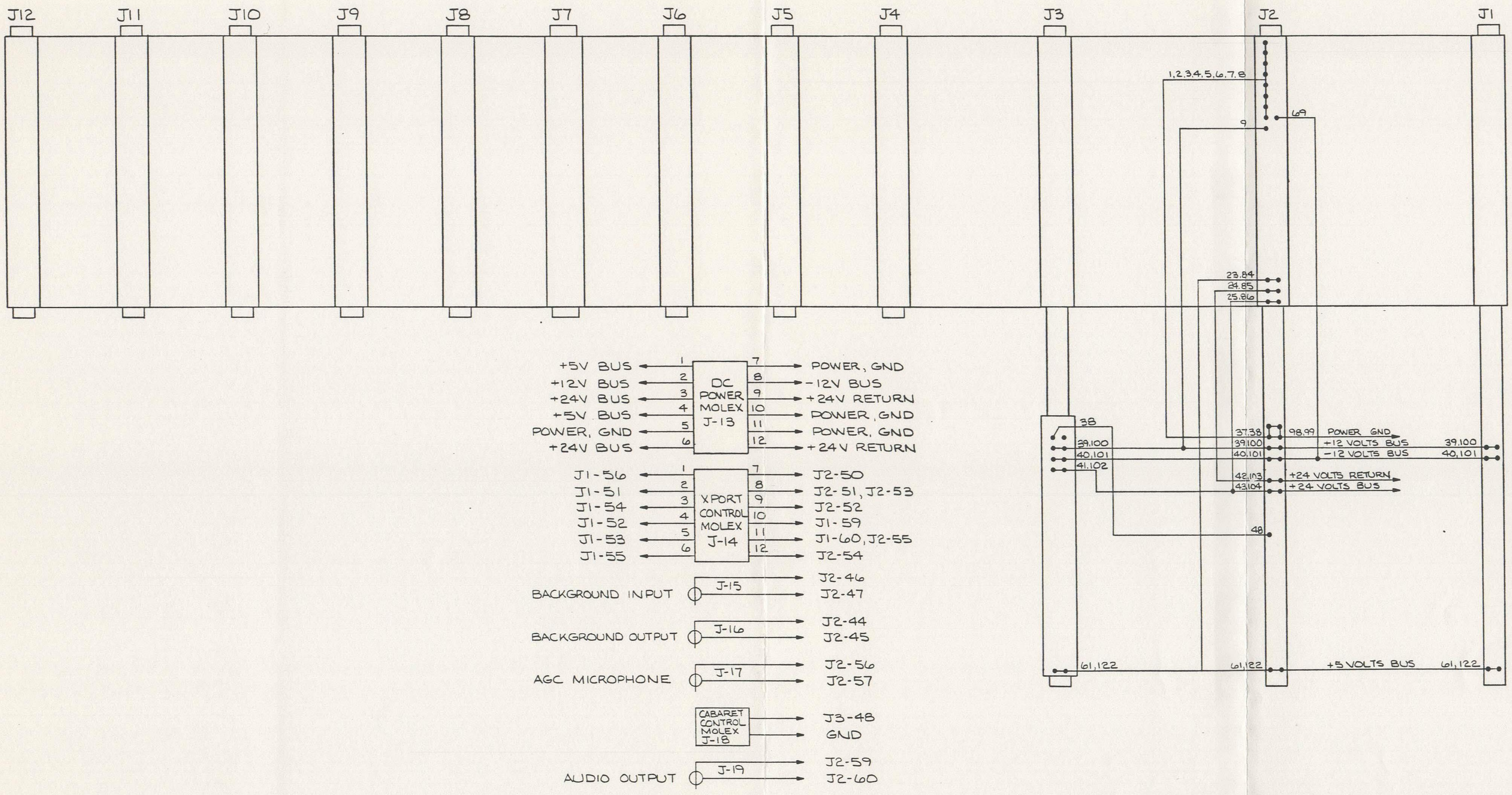
J12
J11
J10
J9
J8
J7
J6
J5
J4
J3
J2
J1
1,2,3,4,5,6,7,8
9
69
23,84
24,85
25,86
38
39,100
40,101
41,102
37,38
39,100
40,101
42,103
43,104
98,99
POWER GND
+12 VOLTS BUS
-12 VOLTS BUS
+24 VOLTS RETURN
+24 VOLTS BUS
39,100
40,101
48
61,122
61,122
+5 VOLTS BUS
61,122
+5V BUS
+12V BUS
+24V BUS
+5V BUS
POWER, GND
+24V BUS
DC POWER MOLEX J-13
POWER, GND
-12V BUS
+24V RETURN
POWER, GND
POWER, GND
+24V RETURN
J1-56
J1-51
J1-54
J1-52
J1-53
J1-55
XPORT CONTROL MOLEX J-14
J2-50
J2-51, J2-53
J2-52
J1-59
J1-60, J2-55
J2-54
BACKGROUND INPUT
J-15
J2-46
J2-47
BACKGROUND OUTPUT
J-16
J2-44
J2-45
AGC MICROPHONE
J-17
J2-56
J2-57
CABARET CONTROL MOLEX J-18
J3-48
GND
AUDIO OUTPUT
J-19
J2-59
J2-60

OUTSTANDING ECNs	

NEXT ASSY	USED ON
APPLICATION	

NOTICE TO ALL PERSONS RECEIVING THIS DRAWING CONFIDENTIAL: Reproduction Forbidden without the specific written permission of Pizza Time Theatre Inc. of Sunnyvale, California. This drawing is only conditionally issued, and neither receipt nor possession thereof confers or transfers any right in, or license to use, the subject matter of the drawing or any design or technical information shown thereon, nor any right to reproduce this drawing or any part thereof, except for manufacture by vendors for Pizza Time Theatre Inc. and for manufacture under the corporation's written license, no right to reproduce this drawing is granted or the subject matter thereof unless by written agreement with or written permission from the corporation.

UNLESS OTHERWISE SPECIFIED
DIMENSIONS ARE IN INCHES
TOLERANCES ON:
ANGLES = ± 1°
.X = ± .1
.XX = ± .03
SURFACE FINISH ✓ .XXX = ± .010

MATERIAL:

FINISH:

DO NOT SCALE DRAWING

DRAWN BY L FORTE DATE 4/14/82

CHECKED C JORGENSEN 4/15/82

ENGINEER

PROJECT ENGINEER

MFG ENGINEER C JORGENSEN 4/15/82

Chuck E. Cheese's Pizza Time Theatre

c 1978 Pizza Time Theatre Inc.

Pizza Time Theatre Inc.
1213 Innsbruck Dr.
Sunnyvale, CA 94086

TITLE BACKPLANE - SCHEMATIC

SIZE D

DRAWING NO. 08-0032

REV A

SCALE NONE

SHEET 1 OF 1

BRUNING 40 528

SYM	ECO NO.	REVISIONS DESCRIPTION	DATE	APPROVED
B	05666	C3 CHANGED FROM 220MF 10V TO 220MF 16V	9/25/80	
C	0690	ADDED REF. CALLOUTS	5/11/81	RH
D	—	U21 CHANGED TO 2732 FROM 2708	6.17.85	RwD

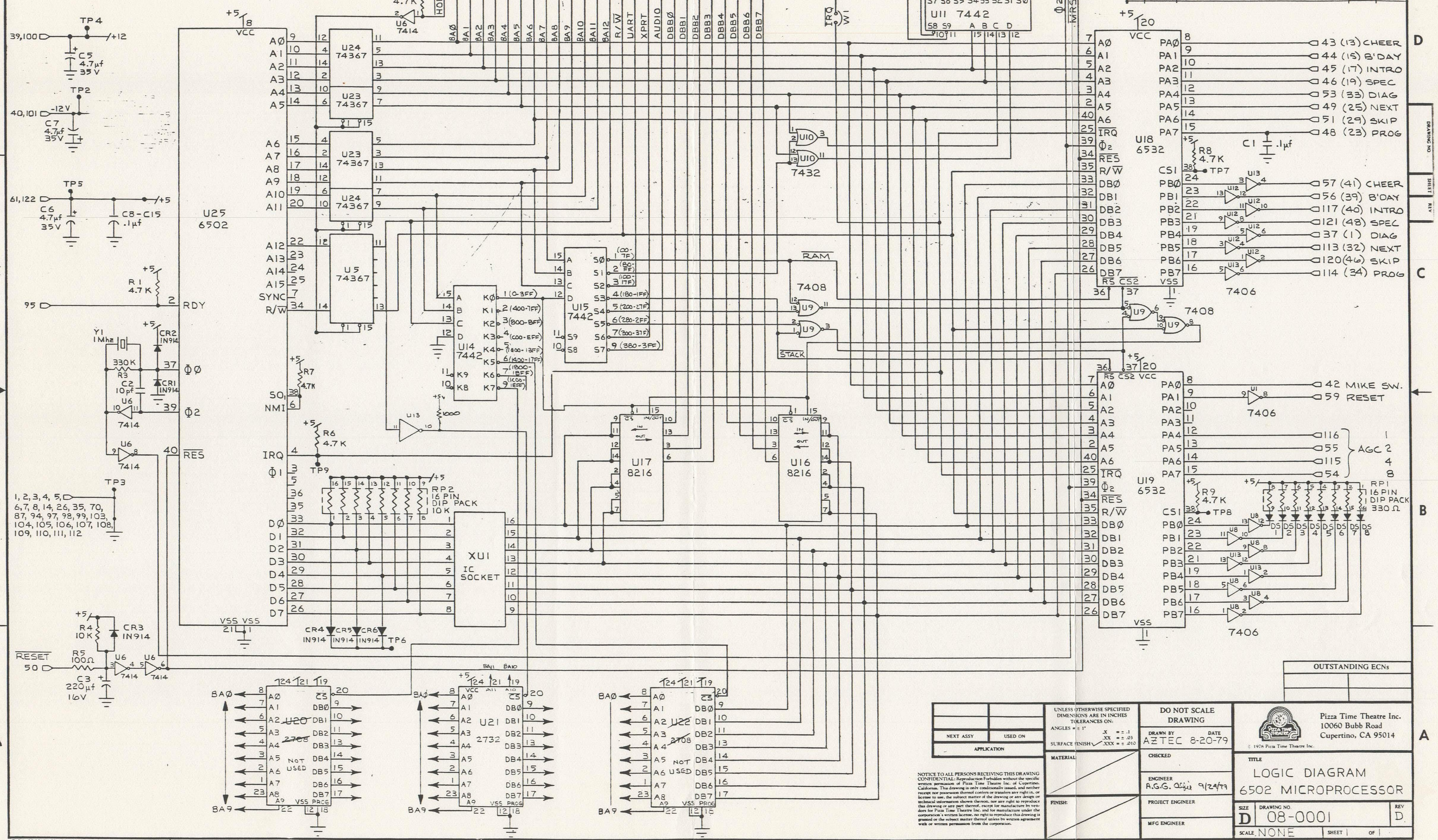

U25 6502
U24 74367
U23 74367
U5 74367
U14 7442
U15 7442
U11 7442
U10 7432
U9 7408
U17 8216
U16 8216
U18 6532
U19 6532
XU1 IC SOCKET
U20 2708 NOT USED
U21 2732
U22 2708 NOT USED
U6 7414
U13
U12
U8
U1 7406
7406
RP2 16 PIN DIP PACK 10K
RP1 16 PIN DIP PACK 330 Ω
Y1 1Mhz
R1 4.7K
R2 4.7K
R3 330K
R4 10K
R5 100Ω
R6 4.7K
R7 4.7K
R8 4.7K
R9 4.7K
C1 .1µf
C2 10pf
C3 220µf 16V
C5 4.7µf 35V
C6 4.7µf 35V
C7 4.7µf 35V
C8-C15 .1µf
CR1 IN914
CR2 IN914
CR3 IN914
CR4 IN914
CR5 IN914
CR6 IN914
TP2
TP3
TP4
TP5
TP6
TP7
TP8
TP9
39,100
+12
40,101
-12V
61,122
+5
95
RDY
ΦØ
Φ2
RES
IRQ
Φ1
NMI
SO1
SYNC
R/W
RESET
50
1, 2, 3, 4, 5, 6, 7, 8, 14, 26, 35, 70, 87, 94, 97, 98, 99, 103, 104, 105, 106, 107, 108, 109, 110, 111, 112
HOLD
BAØ BA1 BA2 BA3 BA4 BA5 BA6 BA7 BA8 BA9 BA10 BA11 BA12
R/W
UART
XPRT
AUDIO
DBBØ DBB1 DBB2 DBB3 DBB4 DBB5 DBB6 DBB7
IRQ W1
BS0 BS1 BS2 BS3 BS4 BS5 BS6 BS7 BS8 BS9
Φ2
MRST
RAM
STACK
K0 1 (0-3FF)
K1 2 (400-7FF)
K2 3 (800-BFF)
K3 4 (C00-EFF)
K4 5 (1000-13FF)
K5 6 (1400-17FF)
K6 7 (1800-1BFF)
K7 9 (1C00-1EFF)
S0 1 (00-7F)
S1 2 (80-FF)
S2 3 (100-17F)
S3 4 (180-1FF)
S4 5 (200-27F)
S5 6 (280-2FF)
S6 7 (300-37F)
S7 9 (380-3FF)
43 (13) CHEER
44 (15) B'DAY
45 (17) INTRO
46 (19) SPEC
53 (33) DIAG
49 (25) NEXT
51 (29) SKIP
48 (23) PROG
57 (41) CHEER
56 (39) B'DAY
117 (40) INTRO
121 (48) SPEC
37 (1) DIAG
113 (32) NEXT
120 (46) SKIP
114 (34) PROG
42 MIKE SW.
59 RESET
116 55 115 54 AGC 1 2 4 8
DS1 DS2 DS3 DS4 DS5 DS6 DS7 DS8
BAØ
BA9
BA11 BA10

OUTSTANDING ECNs

NEXT ASSY | USED ON

APPLICATION

UNLESS OTHERWISE SPECIFIED DIMENSIONS ARE IN INCHES TOLERANCES ON:
ANGLES = ± 1°
.X = ± .1
.XX = ± .03
SURFACE FINISH ✓ .XXX = ± .010

MATERIAL:

FINISH:

NOTICE TO ALL PERSONS RECEIVING THIS DRAWING CONFIDENTIAL: Reproduction Forbidden without the specific written permission of Pizza Time Theatre Inc. of Cupertino, California. This drawing is only conditionally issued, and neither receipt nor possession thereof confers or transfers any right in, or license to use, the subject matter of the drawing or any design or technical information shown thereon, nor any right to reproduce this drawing or any part thereof, except for manufacture by vendors for Pizza Time Theatre Inc. and for manufacture under the corporation's written license, no right to reproduce this drawing is granted or the subject matter thereof unless by written agreement with or written permission from the corporation.

DO NOT SCALE DRAWING

DRAWN BY AZTEC DATE 8-20-79

CHECKED

ENGINEER A.G.G. 9/24/79

PROJECT ENGINEER

MFG ENGINEER

Pizza Time Theatre Inc.
10060 Bubb Road
Cupertino, CA 95014

© 1978 Pizza Time Theatre Inc.

TITLE
LOGIC DIAGRAM
6502 MICROPROCESSOR

SIZE D | DRAWING NO. 08-0001 | REV D.

SCALE NONE | SHEET 1 OF 1

BISHOP GRAPHICS ACCUPRESS REORDER NO. A-1437

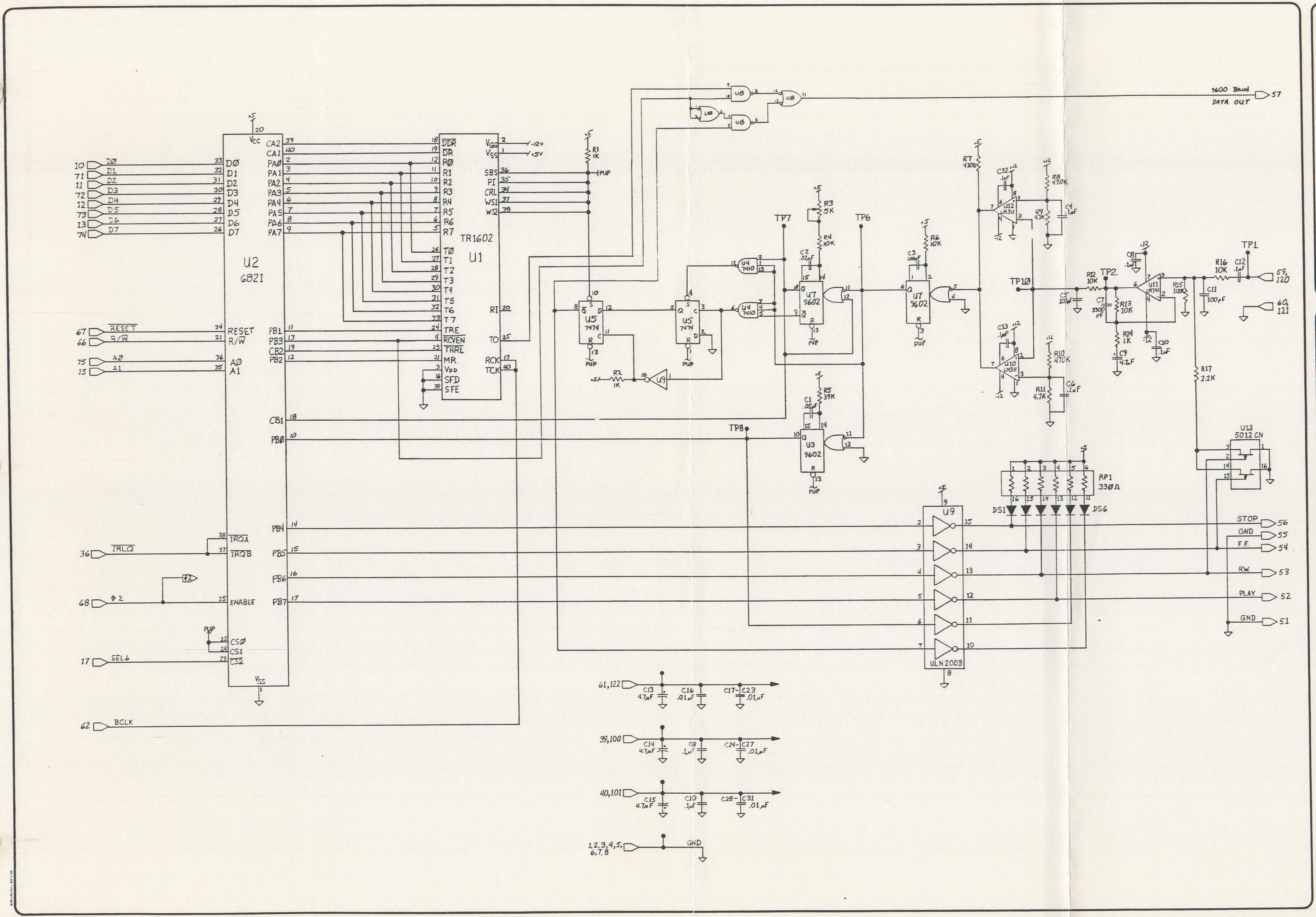
U2
6821
U1
TR1602
D0
D1
D2
D3
D4
D5
D6
D7
RESET
R/W
A0
A1
IRQA
IRQB
ENABLE
CS0
CS1
CS2
VCC
VSS
CA2
CA1
PA0
PA1
PA2
PA3
PA4
PA5
PA6
PA7
PB1
PB3
CB2
PB2
CB1
PB0
PB4
PB5
PB6
PB7
DDR
DR
R0
R1
R2
R3
R4
R5
R6
R7
T0
T1
T2
T3
T4
T5
T6
T7
TRE
RCVEN
THRL
MR
VDD
SFD
SFE
VGG
VSS
SBS
PI
CRL
WS1
WS2
RI
TO
RCK
TCK
-12V
+5V
PUP
IRQ
Φ2
SEL6
BCLK
U8
U5
7474
U4
7410
U7
9602
U3
9602
U9
ULN2003
U10
LM311
U12
LM311
U11
LM741
U13
5012 CN
RP1
330Ω
DS1
DS6
TP1
TP2
TP6
TP7
TP8
TP10
R1 1K
R2 1K
R3 5K
R4 10K
R5 39K
R6 10K
R7 470Ω
R8 470K
R9 4.7K
R10 470K
R11 4.7K
R12 10K
R13 10K
R14 1K
R15 100K
R16 10K
R17 2.2K
C1 .05µF
C2 .02µF
C3 100pF
C4 .1µF
C5 100pF
C6 .1µF
C7 3300 pF
C8 .1µF
C9 4.7µF
C10 .1µF
C11 100pF
C12 .1µF
C32 .1µF
C33 .1µF
9600 Baud
DATA OUT
57
59, 120
60, 121
STOP 56
GND 55
F.F. 54
R.W. 53
PLAY 52
GND 51
10
71
11
72
12
73
13
74
67
66
75
15
36
68
17
62
61,122
C13 4.7µF
C16 .01µF
C17-C23 .01µF
39,100
C14 4.7µF
C8 .1µF
C24-C27 .01µF
40,101
C15 4.7µF
C10 .1µF
C28-C31 .01µF
1,2,3,4,5, 6,7,8
GND

NOTICE TO ALL PERSONS RECEIVING THIS DRAWING
CONFIDENTIAL: Reproduction Forbidden without the specific written permission of Pizza Time Theatre Inc. of Sunnyvale, California. This drawing is only conditionally issued, and neither receipt nor possession thereof confers or transfers any right in, or license to use, the subject matter of the drawing or any design or technical information shown thereon, nor any right to reproduce this drawing or any part thereof, except for manufacture by vendors for Pizza Time Theatre Inc. and for manufacture under the corporation's written license, no right to reproduce this drawing is granted or the subject matter thereof unless by written agreement with or written permission from the corporation.

Chuck E. Cheese's Pizza Time Theatre
©1980 PIZZA TIME THEATRE INC

Pizza Time Theatre Inc.
1213 Innsbruck Dr.
Sunnyvale, CA 94086

REVISIONS

DATE 7-21-82
DRAWN BY B. Van Dyck
APPROVED
SCALE

TITLE
TRANSPORT CONTROL MODULE MASTER

SHEET
OF

SYM	ECO NO.	REVISIONS DESCRIPTION	DATE	APPROVED
A	1200	PRODUCTION RELEASE	4/5/82	C

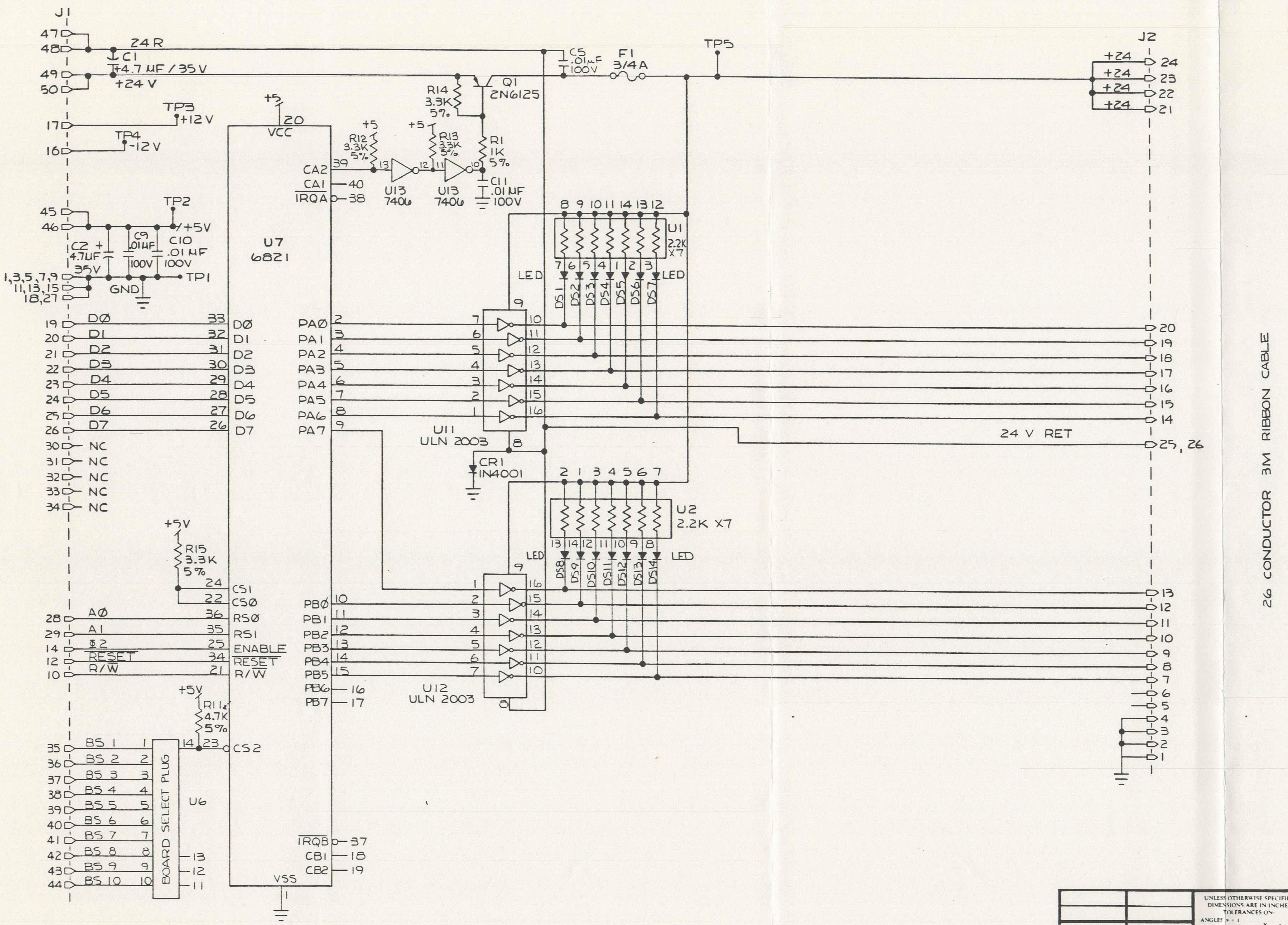
J1
J2
24 R
C1 +4.7 ΜF / 35 V
+24 V
C5 .01μF 100V
F1 3/4 A
TP5
Q1 2N6125
R14 3.3K 5%
R1 1K 5%
C11 .01 ΜF 100V
TP3 +12 V
TP4 -12 V
R12 3.3K 5%
R13 3.3K 5%
U13 7406
TP2 +5V
C2 4.7ΜF 35V
C9 .01ΜF 100V
C10 .01 ΜF 100V
TP1
GND
U7 6821
VCC
VSS
CA2
CA1
IRQA
IRQB
CB1
CB2
D0 D1 D2 D3 D4 D5 D6 D7
PA0 PA1 PA2 PA3 PA4 PA5 PA6 PA7
PB0 PB1 PB2 PB3 PB4 PB5 PB6 PB7
CS1 CS0 CS2
RS0 RS1
ENABLE
RESET
R/W
A0 A1 Φ2 RESET R/W
NC
R15 3.3K 5%
R11 4.7K 5%
U1 2.2K X7
U2 2.2K X7
LED
DS1 DS2 DS3 DS4 DS5 DS6 DS7
DS8 DS9 DS10 DS11 DS12 DS13 DS14
U11 ULN 2003
U12 ULN 2003
CR1 1N4001
24 V RET
25, 26
BS 1 BS 2 BS 3 BS 4 BS 5 BS 6 BS 7 BS 8 BS 9 BS 10
BOARD SELECT PLUG
U6
26 CONDUCTOR 3M RIBBON CABLE

	OUTSTANDING ECNs

NEXT ASSY	USED ON
APPLICATION	

UNLESS OTHERWISE SPECIFIED DIMENSIONS ARE IN INCHES TOLERANCES ON:
ANGLES = ± 1
.X = ± .1
.XX = ± .03
SURFACE FINISH ✓ .XXX = ± .010

MATERIAL:

FINISH:

NOTICE TO ALL PERSONS RECEIVING THIS DRAWING CONFIDENTIAL: Reproduction Forbidden without the specific written permission of Pizza Time Theatre Inc. of Sunnyvale, California. This drawing is only conditionally issued, and neither receipt nor possession thereof confers or transfers any right in, or license to use, the subject matter of the drawing or any design or technical information shown thereon, nor any right to reproduce this drawing or any part thereof, except for manufacture by vendors for Pizza Time Theatre Inc. and for manufacture under the corporation's written license, no right to reproduce this drawing is granted or the subject matter thereof unless by written agreement with or written permission from the corporation.

DO NOT SCALE DRAWING

DRAWN BY	DATE
L.PERCIVAL	4-5-82
CHECKED	
L. FORTE	4-5-82
ENGINEER	
PROJECT ENGINEER	
MFG ENGINEER	
C JORGENSEN	4/5/82

Chuck E. Cheese's Pizza Time Theatre

Pizza Time Theatre Inc.
1213 Innsbruck Dr.
Sunnyvale, CA 94086

c 1978 Pizza Time Theatre Inc.

TITLE
CHARACTER DRIVER SCHEMATIC

SIZE	DRAWING NO	REV
D	08-0034	A

SCALE NONE SHEET 1 OF 1

SYM	ECO NO.	REVISIONS DESCRIPTION	DATE	APPROVED
A	0629	RELEASE TO PRODUCTION	11/13/80	JH

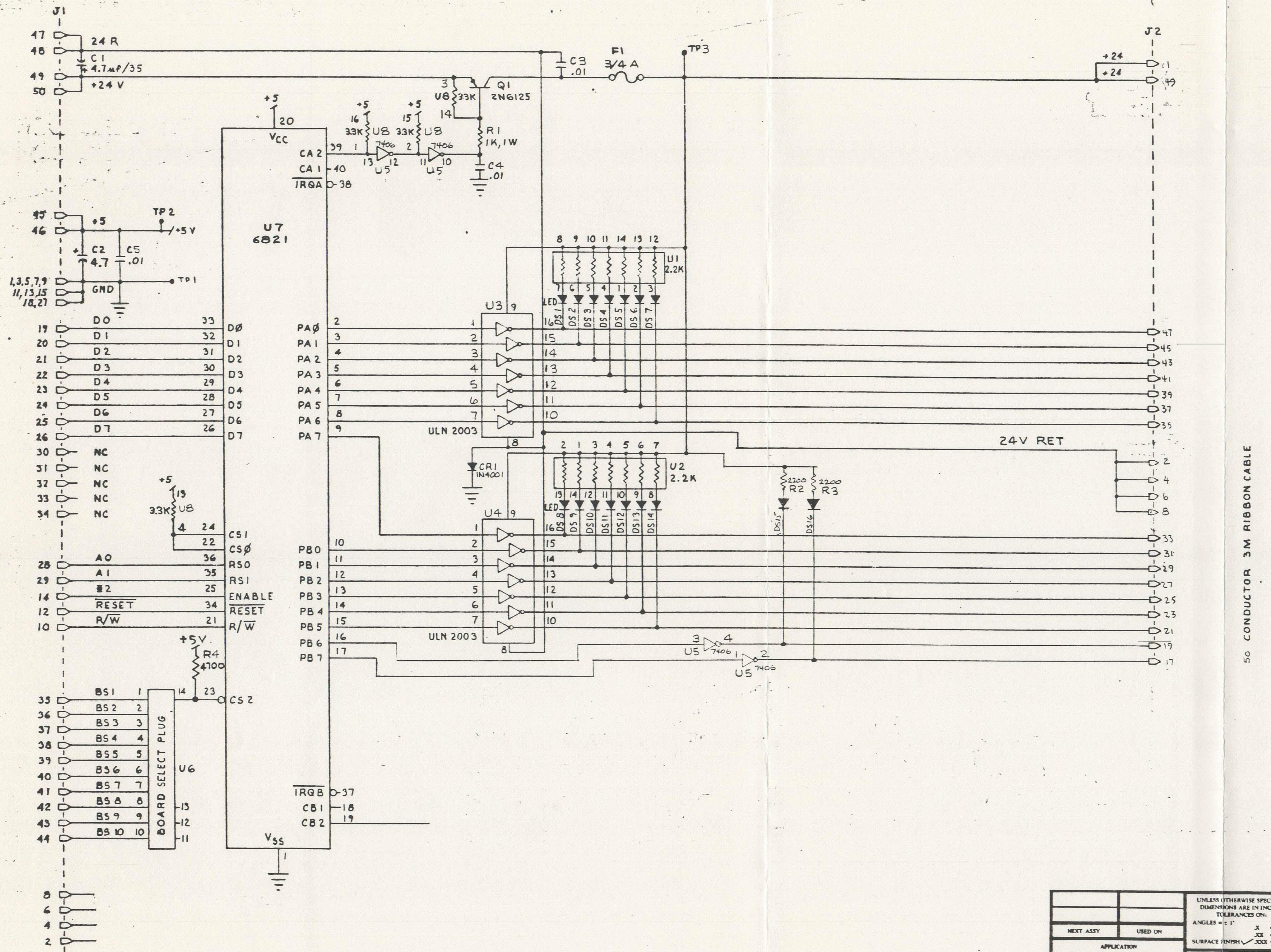

J1
47
48
49
50
24 R
C1
4.7uf/35
+24 V
45
46
+5
TP2
+5V
C2
4.7
C5
.01
1,3,5,7,9
11,13,15
18,27
GND
TP1
17 D0
20 D1
21 D2
22 D3
23 D4
24 D5
25 D6
26 D7
30 NC
31 NC
32 NC
33 NC
34 NC
28 A0
29 A1
14 Ø2
12 RESET
10 R/W
35 BS1
36 BS2
37 BS3
38 BS4
39 BS5
40 BS6
41 BS7
42 BS8
43 BS9
44 BS10
BOARD SELECT PLUG
U6
8
6
4
2
+5
3.3K
U8
+5V
R4
4700
CS2
U7
6821
VCC
20
CA2 39
CA1 40
IRQA 38
D0 D1 D2 D3 D4 D5 D6 D7
CS1 CS0 RS0 RS1 ENABLE RESET R/W
PA0 PA1 PA2 PA3 PA4 PA5 PA6 PA7
PB0 PB1 PB2 PB3 PB4 PB5 PB6 PB7
IRQB 37
CB1 18
CB2 19
VSS
C3
.01
F1
3/4 A
TP3
Q1
2N6125
33K
R1
1K, 1W
C4
.01
7406
U5
U3
U4
ULN 2003
U1
2.2K
U2
2.2K
LED
DS1 DS2 DS3 DS4 DS5 DS6 DS7
DS8 DS9 DS10 DS11 DS12 DS13 DS14
CR1
1N4001
2200
R2
R3
DS15
DS16
24V RET
J2
+24
+24
1
49
47 45 43 41 39 37 35
2 4 6 8
33 31 29 27 25 23 21 19 17
50 CONDUCTOR 3M RIBBON CABLE

OUTSTANDING ECNs

NEXT ASSY	USED ON
APPLICATION	

UNLESS OTHERWISE SPECIFIED
DIMENSIONS ARE IN INCHES
TOLERANCES ON:
ANGLES = ± 1°
.X = ± .1
.XX = ± .03
.XXX = ± .010
SURFACE FINISH ✓

MATERIAL:

FINISH:

DO NOT SCALE DRAWING

DRAWN BY Russ DATE 6-10-80

CHECKED

ENGINEER 11/13/80

PROJECT ENGINEER

MFG ENGINEER

Pizza Time Theatre Inc.
10060 Bubb Road
Cupertino, CA 95014

© 1978 Pizza Time Theatre Inc.

TITLE SCHEMATIC LIGHT DRIVER

SIZE D DRAWING NO. 08-0021 REV A

SCALE SHEET 1 OF 1

NOTICE TO ALL PERSONS RECEIVING THIS DRAWING CONFIDENTIAL: Reproduction Forbidden without the specific written permission of Pizza Time Theatre Inc. of Cupertino, California. This drawing is only conditionally issued, and neither receipt nor possession thereof confers or transfers any right in, or license to use, the subject matter of the drawing or any design or technical information shown thereon, nor any right to reproduce this drawing or any part thereof, except for manufacture by vendors for Pizza Time Theatre Inc. and for manufacture under the corporation's written license, no right to reproduce this drawing is granted or the subject matter thereof unless by written agreement with or written permission from the corporation.

SYM	ECO NO.	REVISIONS DESCRIPTION	DATE	APPROVED
B				
C	0460	J1 WAS CHANGED FROM P/N 530-0016 TO P/N 530-0021	6/2/80	
D	0533	ADDED MIC. HOOK-UP TO DWG. IN ZONE D-2	9/25/80	
E	0837	ADDED W2 JUMPER IN ZONE B8- USED ON -20 VERSION ONLY.	7/27/8	BH
F	1629	REMOVED NOTES	4-13 83	Doug

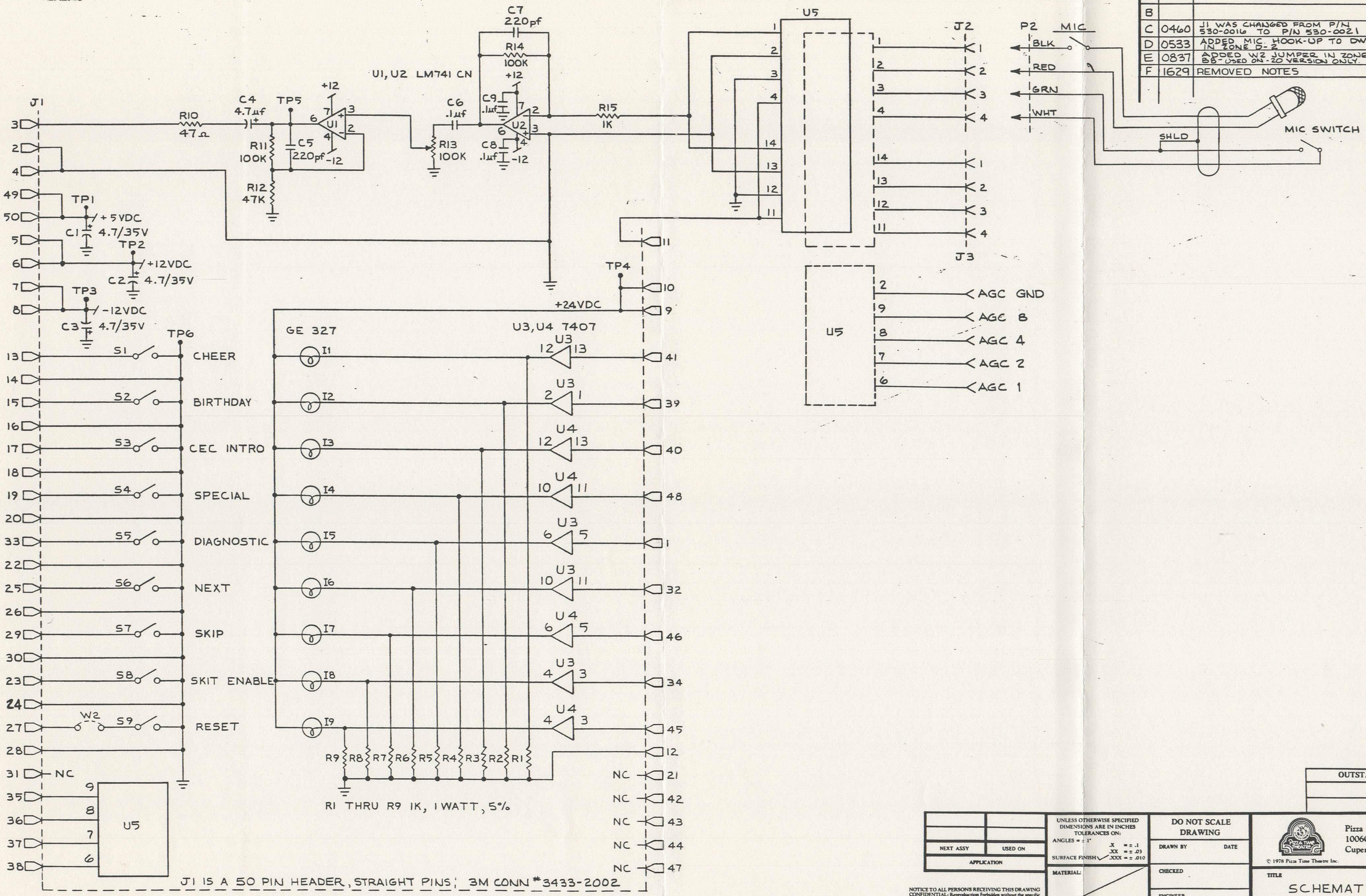
U1, U2 LM741 CN
J1
R10 47Ω
C4 4.7µf
TP5
+12
U1
R11 100K
C5 220pf
-12
R12 47K
C7 220pf
R14 100K
+12
C6 .1µf
R13 100K
C9 .1µf
U2
C8 .1µf
-12
R15 1K
U5
J2
P2
MIC
BLK
RED
GRN
WHT
SHLD
MIC SWITCH
J3
AGC GND
AGC 8
AGC 4
AGC 2
AGC 1
TP1
+5VDC
C1 4.7/35V
TP2
+12VDC
C2 4.7/35V
TP3
-12VDC
C3 4.7/35V
TP4
+24VDC
TP6
GE 327
U3, U4 7407
S1 CHEER
S2 BIRTHDAY
S3 CEC INTRO
S4 SPECIAL
S5 DIAGNOSTIC
S6 NEXT
S7 SKIP
S8 SKIT ENABLE
W2
S9 RESET
NC
R9 R8 R7 R6 R5 R4 R3 R2 R1
R1 THRU R9 1K, 1 WATT, 5%
J1 IS A 50 PIN HEADER, STRAIGHT PINS; 3M CONN #3433-2002

OUTSTANDING ECNs

NEXT ASSY	USED ON
APPLICATION	

UNLESS OTHERWISE SPECIFIED DIMENSIONS ARE IN INCHES
TOLERANCES ON:
ANGLES = ± 1°
.X = ± .1
.XX = ± .03
SURFACE FINISH ✓ .XXX = ± .010

MATERIAL:

FINISH:

DO NOT SCALE DRAWING

DRAWN BY DATE

CHECKED

ENGINEER
A.G.G Alfie 9/24/79

PROJECT ENGINEER

MFG ENGINEER

Pizza Time Theatre Inc.
10060 Bubb Road
Cupertino, CA 95014

© 1978 Pizza Time Theatre Inc.

TITLE
SCHEMATIC
CONTROL CONSOLE

SIZE D
DRAWING NO. 008-0007-01
REV F
SCALE NONE
SHEET 1 OF 1

NOTICE TO ALL PERSONS RECEIVING THIS DRAWING CONFIDENTIAL: Reproduction Forbidden without the specific written permission of Pizza Time Theatre Inc. of Cupertino, California. This drawing is only conditionally issued, and neither receipt nor possession thereof confers or transfers any right in, or license to use, the subject matter of the drawing or any design or technical information shown thereon, nor any right to reproduce this drawing or any part thereof, except for manufacture by vendors for Pizza Time Theatre Inc. and for manufacture under the corporation's written license, no right to reproduce this drawing is granted or the subject matter thereof unless by written agreement with or written permission from the corporation.

BISHOP GRAPHICS/ACCUPRESS REORDER NO. A-5427

SYM	ECO NO.	REVISIONS DESCRIPTION	DATE	APPROVED
B	0808	SHORTED T1 PINS 2 TO 3 ANG 6 TO 7.	6/26/81	RH

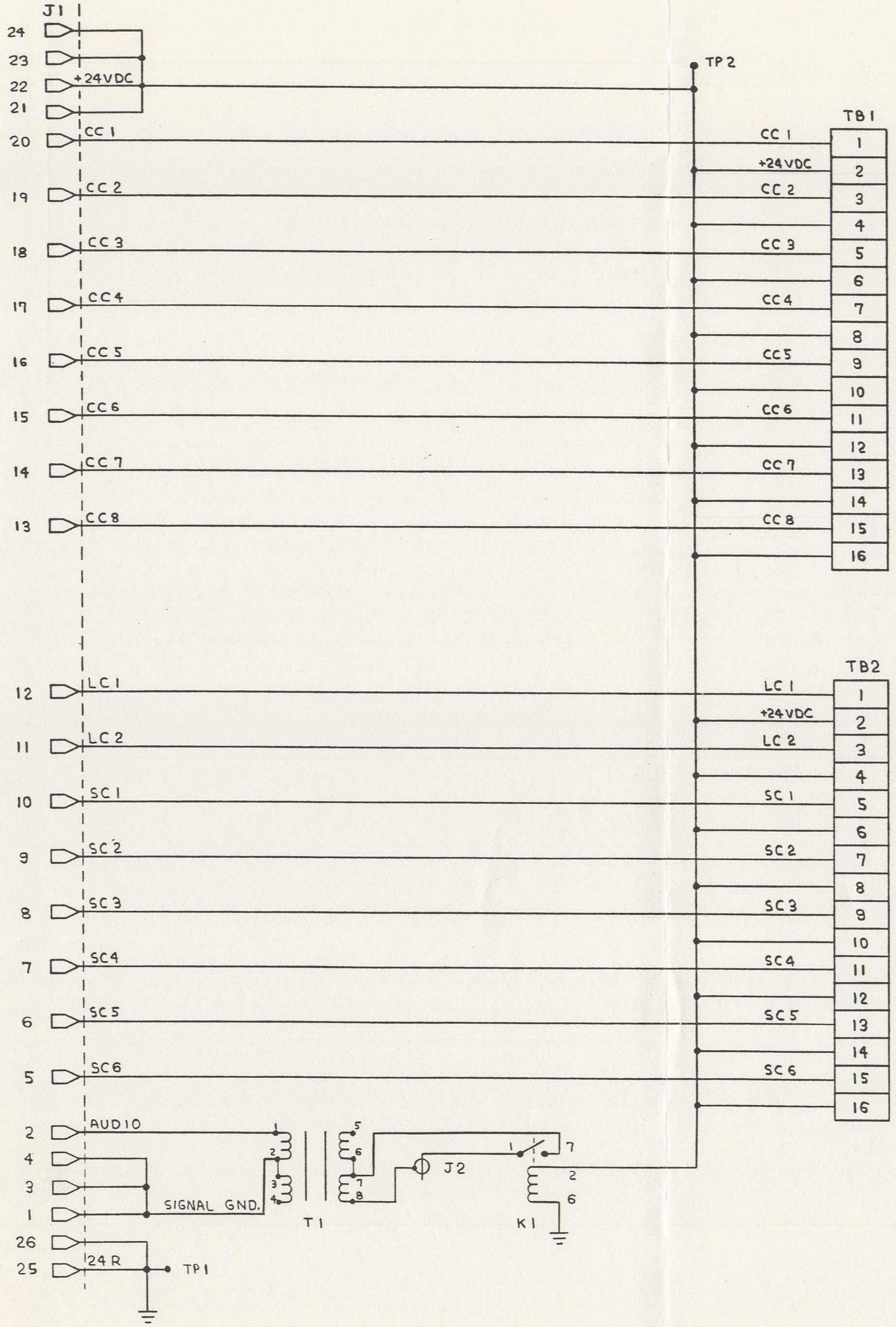

J1
24
23
22
21
+24VDC
20
CC 1
19
CC 2
18
CC 3
17
CC4
16
CC 5
15
CC 6
14
CC 7
13
CC8
TP 2
TB 1
CC 1
+24VDC
CC 2
CC 3
CC 4
CC5
CC6
CC 7
CC 8
1
2
3
4
5
6
7
8
9
10
11
12
13
14
15
16
12
LC 1
11
LC 2
10
SC 1
9
SC 2
8
SC 3
7
SC4
6
SC 5
5
SC6
TB2
LC 1
+24VDC
LC 2
SC 1
SC 2
SC 3
SC 4
SC 5
SC 6
1
2
3
4
5
6
7
8
9
10
11
12
13
14
15
16
2
AUDIO
4
3
1
SIGNAL GND.
26
25
24 R
TP1
T1
1
2
3
4
5
6
7
8
J2
K1
1
7
2
6

OUTSTANDING ECNs

NEXT ASSY	USED ON
APPLICATION	

UNLESS OTHERWISE SPECIFIED
DIMENSIONS ARE IN INCHES
TOLERANCES ON:
ANGLES = ± 1°
.X = ± .1
.XX = ± .03
.XXX = ± .010
SURFACE FINISH ✓

MATERIAL:

FINISH:

DO NOT SCALE DRAWING

DRAWN BY
DATE

CHECKED

ENGINEER
A.G.G. Agis 9/24/79

PROJECT ENGINEER

MFG ENGINEER

Pizza Time Theatre Inc.
10060 Bubb Road
Cupertino, CA 95014

© 1978 Pizza Time Theatre Inc.

TITLE
SCHEMATIC
SOLENOID BOARD

SIZE D
DRAWING NO. 08-0005
REV B
SCALE NONE
SHEET 1 OF 1

NOTICE TO ALL PERSONS RECEIVING THIS DRAWING CONFIDENTIAL: Reproduction Forbidden without the specific written permission of Pizza Time Theatre Inc. of Cupertino, California. This drawing is only conditionally issued, and neither receipt nor possession thereof confers or transfers any right in, or license to use, the subject matter of the drawing or any design or technical information shown thereon, nor any right to reproduce this drawing or any part thereof, except for manufacture by vendors for Pizza Time Theatre Inc. and for manufacture under the corporation's written license, no right to reproduce this drawing is granted or the subject matter thereof unless by written agreement with or written permission from the corporation.

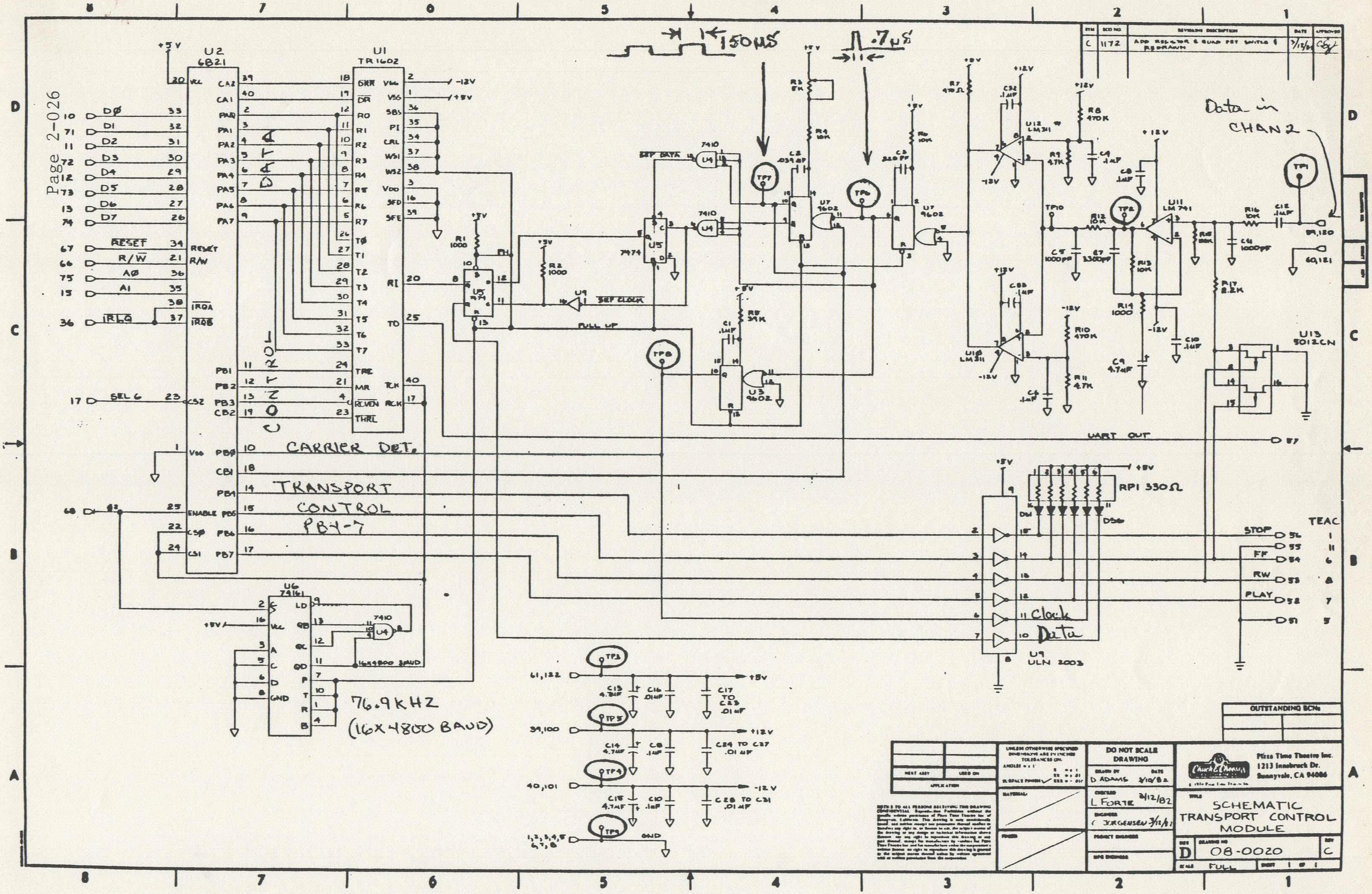
150µS
.7µS
Data in CHAN 2
U2 6821
U1 TR1602
U5 7474
U4 7410
U7 9602
U3 9602
U9
U10 LM311
U12 LM311
U11 LM741
U13 5012CN
U6 74161
U9 ULN 2003
RP1 330Ω
TP1
TP2
TP3
TP4
TP5
TP6
TP7
TP8
TP9
TP10
SEP DATA
SEP CLOCK
PULL UP
UART OUT
CARRIER DET.
TRANSPORT CONTROL PB4-7
Clock
Data
RESET
R/W
A0
A1
IRQA
IRQB
SEL 6
D0
D1
D2
D3
D4
D5
D6
D7
STOP
FF
RW
PLAY
TEAC
76.9KHZ
(16X4800 BAUD)
1/16 4800 BAUD
+5V
+12V
-12V
GND
C
1172
ADD RESISTOR & QUAD FET SWITCH & REDRAWN
3/12/82
OUTSTANDING ECNs
NEXT ASSY
USED ON
APPLICATION
UNLESS OTHERWISE SPECIFIED DIMENSIONS ARE IN INCHES TOLERANCES ON:
MATERIAL
FINISH
DO NOT SCALE DRAWING
DRAWN BY D ADAMS 3/10/82
CHECKED L FORTE 3/12/82
ENGINEER C JORGENSEN 3/12/82
PROJECT ENGINEER
MFG ENGINEER
Chuck E. Cheese's
Pizza Time Theatre Inc.
1213 Innsbruck Dr.
Sunnyvale, CA 94086
TITLE SCHEMATIC TRANSPORT CONTROL MODULE
SIZE D
DRAWING NO 08-0020
REV C
SCALE FULL
SHEET 1 OF 1

6821 - PIA
1602 - UART
VLN 2003 - Hi-Volt Driver
74161 - 4 Stage Counter
9602 - Data Set

Transport Control Module Cont.

TEST

Make sure the card to test is the proper type for the deck used. A card with 4 relays in K1-4 is to be used only with a TEAC 2340.

1. Give the board a good visual inspection and correct any problems.
2. Insert TCM and a CPU in rack and power up.
3. After the diagnostic light comes on, the deck should not move.
4. Verify that the function LED's on the TCM come on when activated by the proper CP button. The deck should take action as follows:

Button Pressed	TCM LED Pulse	Deck Action
Birthday	DS 2	Rewind
Cheer	DS0 (Bottom)	Stop
Next	DS 3	Play
Program	DS 1	Fast Forward

5. This test verifies that at least half of the PIA-U1 is working. Any problems, contact Technical Services.

TEST POINTS

TP1	Audio/data from TEACH ch. 3 (1vppp)
TP2	Data after 1st preamp (10 vpp)
TP3	+5V
TP4	-12V
TP5	+12V
TP6	Selected data/clock stream (.7 us) TTL)
TP7	One shot filter output (150us) (TTL)
TP8	Reset (0) if carrier present
TP9	Ground
TP10	Comparator input

LED DISPLAY

DS1	Stop (all LEDs active when lit).
DS2	Fast forward
DS3	Rewind
DS4	Play
DS5	Carrier
DS6	Data (top LED)

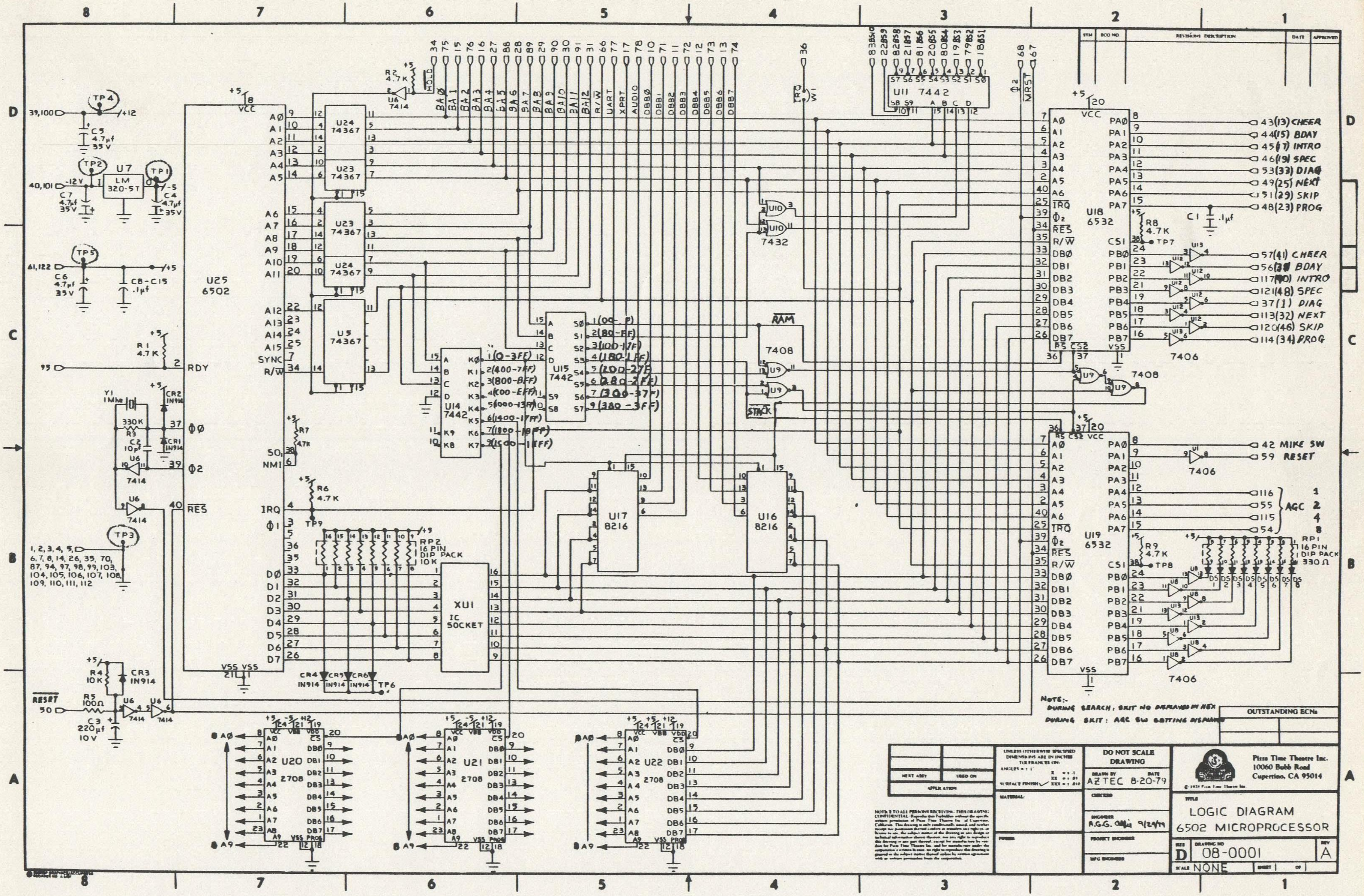
U25
6502
U24 74367
U23 74367
U5 74367
U14 7442
U15 7442
U11 7442
U17 8216
U16 8216
U18 6532
U19 6532
U20 2708
U21 2708
U22 2708
XU1 IC SOCKET
U7 LM 320-5T
U10 7432
U9 7408
RAM
STACK
7406
7414
TP1
TP2
TP3
TP4
TP5
TP6
TP7
TP8
TP9
RDY
Φ0
Φ2
RES
IRQ
NMI
SYNC
R/W
VCC
VSS
HOLD
BA0
BA1
BA2
BA3
BA4
BA5
BA6
BA7
BA8
BA9
BA10
BA11
BA12
R/W
UART
XPRT
AUDIO
DBB0
DBB1
DBB2
DBB3
DBB4
DBB5
DBB6
DBB7
MRST
1(0-3FF)
2(400-7FF)
3(800-BFF)
4(C00-EFF)
5(1000-13FF)
6(1400-17FF)
7(1800-1BFF)
8(1C00-1FFF)
1(00-7F)
2(80-FF)
3(100-17F)
4(180-1FF)
5(200-27F)
6(280-2FF)
7(300-37F)
9(380-3FF)
43(13) CHEER
44(15) BDAY
45(17) INTRO
46(19) SPEC
53(33) DIAG
49(25) NEXT
51(29) SKIP
48(23) PROG
57(41) CHEER
56(39) BDAY
117(50) INTRO
121(48) SPEC
37(1) DIAG
113(32) NEXT
120(46) SKIP
114(34) PROG
42 MIKE SW
59 RESET
116
55
115
54
AGC
1
2
4
8
RP1 16 PIN DIP PACK 330Ω
RP2 16 PIN DIP PACK 10K
DS
R1 4.7K
R2 4.7K
R3 330K
R4 10K
R5 100Ω
R6 4.7K
R7 4.7K
R8 4.7K
R9 4.7K
Y1 1MHz
C1 .1μf
C2 10pf
C3 220μf 10V
C4 4.7μf 35V
C5 4.7μf 35V
C6 4.7μf 35V
C7 4.7μf 35V
C8-C15 .1μf
CR1 IN914
CR2 IN914
CR3 IN914
CR4 IN914
CR5 IN914
CR6 IN914
39,100
40,101
61,122
95
RESET 50
1, 2, 3, 4, 5, 6, 7, 8, 14, 26, 35, 70, 87, 94, 97, 98, 99, 103, 104, 105, 106, 107, 108, 109, 110, 111, 112
+12
-12V
-5
+5
W1
IRQ
36
68
67
8 7 6 5 4 3 2 1
D C B A

NOTE:-
DURING SEARCH; SKIT NO DISPLAYED IN HEX
DURING SKIT: AGC SW SETTING DISPLAYED

OUTSTANDING ECNs

NEXT ASSY	USED ON
APPLICATION	

UNLESS OTHERWISE SPECIFIED DIMENSIONS ARE IN INCHES TOLERANCES ON:
ANGLES ± 1°
X ± .1
XX ± .01
XXX ± .010
SURFACE FINISH ✓

MATERIAL:

FINISH

DO NOT SCALE DRAWING

DRAWN BY AZTEC
DATE 8-20-79

CHECKED

ENGINEER R.G.G. 9/24/79

PROJECT ENGINEER

MFG ENGINEER

Pizza Time Theatre Inc.
10060 Bubb Road
Cupertino, CA 95014

© 1979 Pizza Time Theatre Inc.

TITLE
LOGIC DIAGRAM
6502 MICROPROCESSOR

SIZE D
DRAWING NO 08-0001
REV A
SCALE NONE
SHEET 1 OF 1

NOTICE TO ALL PERSONS RECEIVING THIS DRAWING: CONFIDENTIAL. Reproduction forbidden without the specific written permission of Pizza Time Theatre Inc. of Cupertino, California. This drawing is only conditionally issued, and neither receipt nor possession thereof confers or transfers any right in, or license to use, the subject matter of the drawing or any design or technical information shown thereon, nor any right to reproduce this drawing or any part thereof, except for manufacture by vendors for Pizza Time Theatre Inc. and for manufacture under the corporation's written license, no right to reproduce this drawing is granted or the subject matter thereof unless by written agreement with or written permission from the corporation.

CPU CARD

DESCRIPTION

The brains of a cyber system are in this 6502 based CPU card. Voltage regulation is performed on the -5V line only. Three sockets are provided for 2708 Eproms. A 1 MHz clock is generated for CPU and system use.

Four parallel I/O ports are provided via two 6532's (U18, U19) which are programmed to perform I/O as in the schematic. Program RAM and stack are also located in these IC's. A cyber system makes use of a timer feature in U18, that in U19 is unused. Character driver modules Character driver modules are enabled through U11, a BCD/DEC decoder. All address and data lines are buffered for off board use.

FUNCTION

The CPU processes a program in the E-proms and through ports and enables, commands the entire system. Front panel switches and lamps are controlled directly from the I/O of U18.

The reset lamp, AGC and a mike sense switch are handled in U19, whose A port controls the CPU's LED indicators. A jumper in XU1 is required for operation. It can be removed for diagnostic purposes.

PECULARITIES

The CPU has no external adjustments, and only requires a XU1 plus an Eprom(s) to be complete.

LED DISPLAY

Eight LED's on board are under total software control. They have two meanings when a Cyber B program is running. If the tape is in search mode, the skit number is displayed. Any other time the AGC level comes through.

TEST POINTS

DS1	128 (Top LED)
DS2	64
DS3	32
DS4	16
DS5	8
DS6	4
DS7	2
DS8	1 (Bottom LED)

TP1	-5
TP2	-12V
TP3	Ground
TP4	+12V
TP5	+5
TP6	Nop line - to be grounded to produce NCP's
TP7	U18, CS1, +5V
TP8	U10, CS2, +5V
TP9	IRQ, +5V

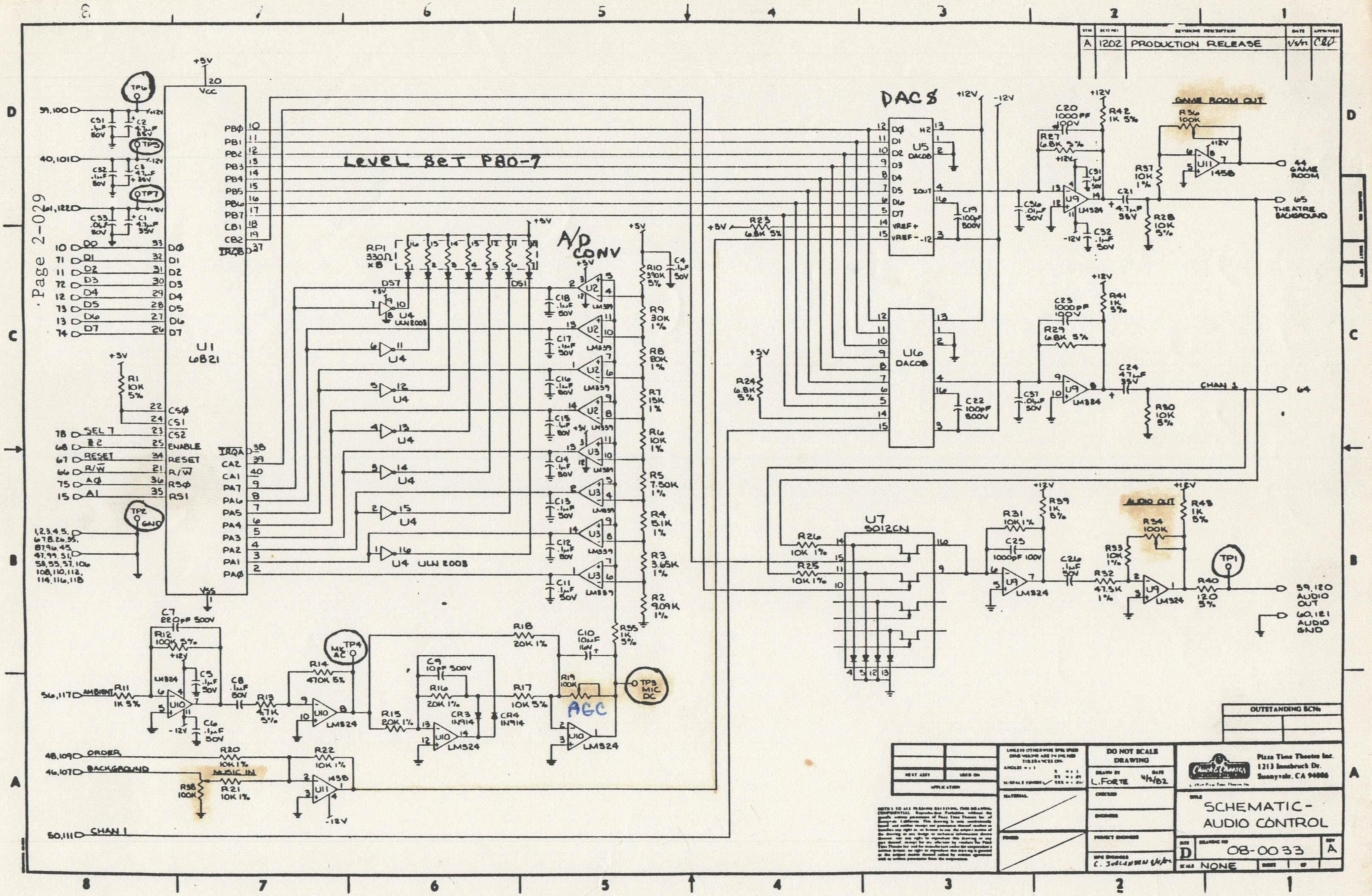
A 1202 PRODUCTION RELEASE 1/8/82 CBD
LEVEL SET PB0-7
DAC8
A/D CONV
U1 6B21
U2 LM339
U3 LM339
U4 ULN2003
U5 DAC08
U6 DAC08
U7 5012CN
U9 LM324
U10 LM324
U11 1458
RP1 330Ω x 8
TP1
TP2 GND
TP4 MIC AC
TP5
TP6
TP7
TP9 MIC DC
AGC
GAME ROOM OUT
44 GAME ROOM
65 THEATRE BACKGROUND
CHAN 1
64
AUDIO OUT
59,120 AUDIO OUT
60,121 AUDIO GND
56,117 AMBIENT
48,109 ORDER
46,107 BACKGROUND
MUSIC IN
50,111 CHAN 1
78 SEL 7
68 E2
67 RESET
66 R/W
75 A0
15 A1
OUTSTANDING ECNs
DO NOT SCALE DRAWING
DRAWN BY L. FORTE
DATE 4/12/82
C. JURGENSEN
Pizza Time Theatre Inc.
1213 Innsbruck Dr.
Sunnyvale, CA 94086
SCHEMATIC-AUDIO CONTROL
SIZE D
DRAWING NO 08-0033
REV A
SCALE NONE

6821 - P1A 1458 - Dual Amp ULN 2003 - Hi-Volt Driver

LM324 - Quad Amp LM339 - Quad Comp'r 5012CN Quad Fet Switch

X-7

AUDIO CONTROL BOARD

DESCRIPTION

The ACB has two major functions: ambient noise sensing, and overall volume control. The ambient mike is inputted to a preamp, filter, rectifier, and finally digital comparators. LEDs display their outputs and a PIA feeds the data to the bus.

The other half of the same PIA outputs a digital volume level which controls four separate audio channels. All channels are controlled by the same command, but contain separate audio signals.

FUNCTION

The two ports of U1 control the audio functions of the Cyber system. Input Port A of U1 gives the CPU the exponentially digitized ambient noise level. This signal is processed on-board directly from a microphone. The first two stages of U10 provide a gain of 10,000. The third stage converts the signal to a DC value which is then averaged in the final stage of U10. The resistor divider network R2-R10 provides voltage references for the comprators. These 8 levels provide an expotential representation of the volume. Port A of U1 read this value, as do the LED driver U4.

After the CPU processes this ambient level, it outputs a volume level to Port B (U1). These 8 lines feed 4 Dac's, which act as volume controls (U5-8). In a standard cyber or cabaret system, only 2 are used, order/background and ch. 1.

PECULIARITIES

Four separate audio signals may be controlled (attenuated), only 2 are used. The comparator's base value must be "tuned" (R19).

Two volume pots are provided for field adjustment.

TEST

1. The ACB must be visually inspected and corrected before testing.
2. Insert board and CPU, power up.
3. Connect a mike or signal source to "AMB IN" or J17. Verify that audio level is registered on the ACB's LEDs. Increasing volume increases the number of LED's lit.

Audio Control Board Cont.

4. Press Rest, Diag., now the CPU is reading this audio level and displaying it on the CPU's LED's. They should be the same except the CPU has one more bit of accuracy.

5. If the patterns are different the ACB's PIA has got a problem.

6. Contact Technical Services if any problems are detected.

TEST POINTS

TP1	Ground
TP2	Comparator input (mike DC)
TP3	Ambient x10,000 (mike AC)
TP4	-12V
TP5	_12V
TP6	+ 5V

LED DISPLAY

Seven LED's provide a hardware, direct readout of processed ambient level, no software control.

DS1	65db (Botton LED)
DS2	68db
DS3	71db
DS4	74db
DS5	77db
DS6	80db
DS7	83db (Top LED)

The decible readings above are taken with the "AGC" control knob on the control panel set at "0". The following chart indicates the voltage out of the "AGC" controller in reference to the control knob settings.

AGC	OUTPUT
-4	0 MV
-3	4 MV
-2	8 MV
-1	16 MV
-0	32 MV
1	64 MV
2	128 MV
3	256 MV
4	512 MV
5	1.024 VPP

REV	ECO NO	REVISION DESCRIPTION	DATE	APPROVED
A	1208	PRODUCTION RELEASE	4/15/82	CJ

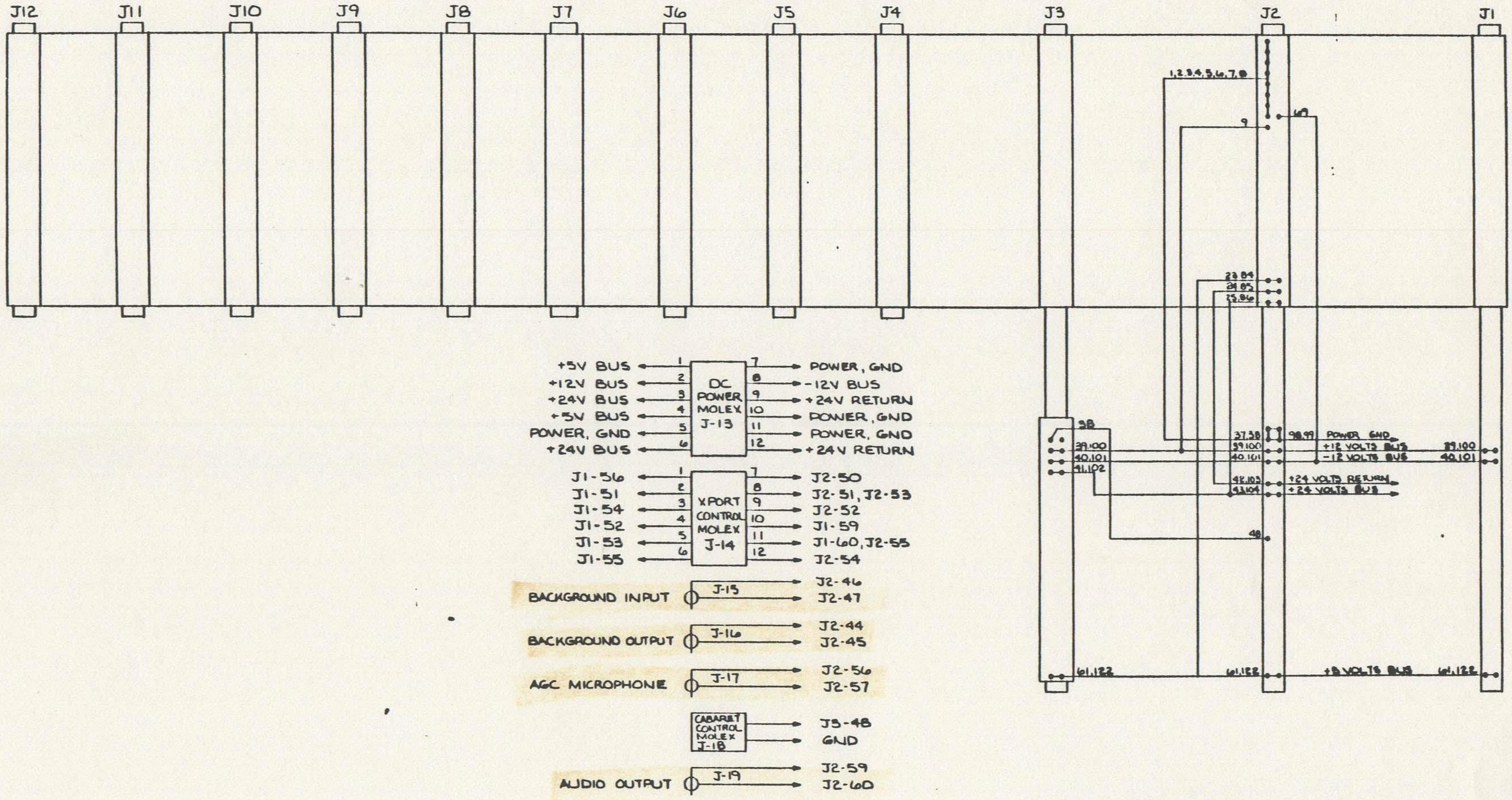
J12
J11
J10
J9
J8
J7
J6
J5
J4
J3
J2
J1
1,2,3,4,5,6,7,8
9
69
23,84
24,85
25,86
38
39,100
40,101
41,102
37,38
98,99
POWER GND
+12 VOLTS BUS
-12 VOLTS BUS
39,100
40,101
42,103
43,104
+24 VOLTS RETURN
+24 VOLTS BUS
48
61,122
61,122
+5 VOLTS BUS
61,122
+5V BUS
+12V BUS
+24V BUS
+5V BUS
POWER, GND
+24V BUS
DC POWER MOLEX J-13
1
2
3
4
5
6
7
8
9
10
11
12
POWER, GND
-12V BUS
+24V RETURN
POWER, GND
POWER, GND
+24V RETURN
J1-56
J1-51
J1-54
J1-52
J1-53
J1-55
XPORT CONTROL MOLEX J-14
J2-50
J2-51, J2-53
J2-52
J1-59
J1-60, J2-55
J2-54
BACKGROUND INPUT
J-15
J2-46
J2-47
BACKGROUND OUTPUT
J-16
J2-44
J2-45
AGC MICROPHONE
J-17
J2-56
J2-57
CABARET CONTROL MOLEX J-18
J3-48
GND
AUDIO OUTPUT
J-19
J2-59
J2-60

OUTSTANDING ECNs	

NEXT ASSY	USED ON
APPLICATION	

UNLESS OTHERWISE SPECIFIED DIMENSIONS ARE IN INCHES TOLERANCES ON:
ANGLES ± [illegible]
.X ± [illegible]
.XX ± .01
.XXX ± .010
SURFACE FINISH ✓

MATERIAL:

FINISH:

NOTICE TO ALL PERSONS RECEIVING THIS DRAWING: CONFIDENTIAL. Reproduction Forbidden without the specific written permission of Pizza Time Theatre Inc. of Sunnyvale, California. [illegible]

DO NOT SCALE DRAWING

DRAWN BY: L FORTE DATE: 4/14/82
CHECKED: C JORGENSEN 4/15/82
ENGINEER:
PROJECT ENGINEER:
MFG ENGINEER: C JORGENSEN 4/15/82

Pizza Time Theatre Inc.
1213 Innsbruck Dr.
Sunnyvale, CA 94086

TITLE: BACKPLANE - SCHEMATIC

SIZE: D
DRAWING NO: 08-0032
REV: A
SCALE: NONE
SHEET 1 OF 1

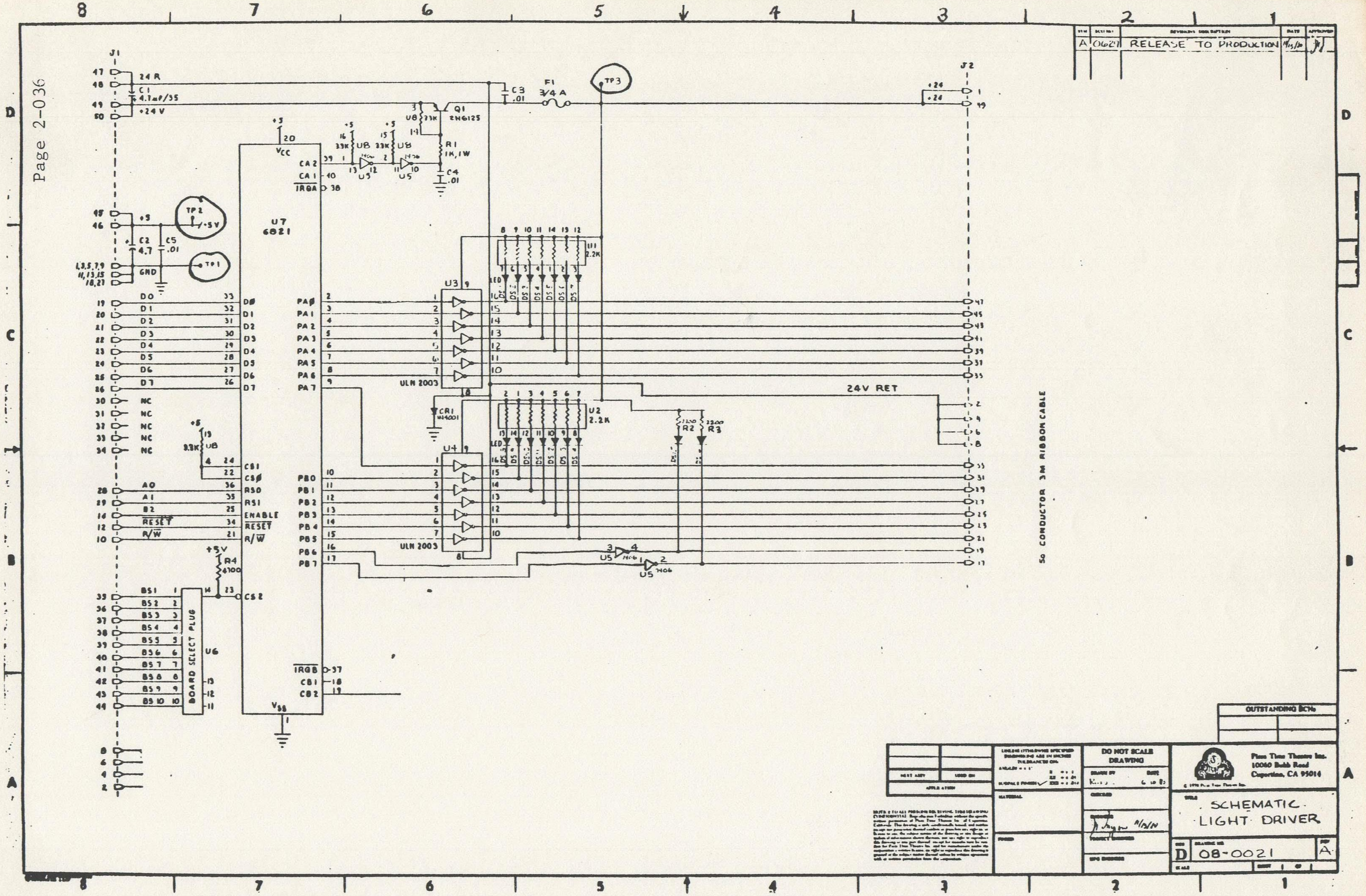
J1
J2
U7
6821
U3
ULN 2003
U4
ULN 2003
U6
BOARD SELECT PLUG
Q1
2N6125
F1
3/4 A
R1
1K, 1W
R4
4700
U1
2.2K
U2
2.2K
CR1
1N4001
TP1
TP2
TP3
+24 V
GND
24V RET
50 CONDUCTOR 3M RIBBON CABLE
A 0621 RELEASE TO PRODUCTION
DO NOT SCALE DRAWING
OUTSTANDING ECNs
Pizza Time Theatre Inc.
10060 Bubb Road
Cupertino, CA 95014
SCHEMATIC LIGHT DRIVER
D 08-0021 A

6821-P1A

VLN 2003 - Hi-Volt Driver

LIGHT DRIVER BOARD

DESCRIPTION

The Light Driver Board is very similar to the Character Drive Board except it contains no audio switching. It has the same 24V switchable supply, and 16 output lines.

FUNCTION

The Light Driver Board works the same as a Character Driver Board except the last two outut lines of the 16 output lines are also used as outputs. They are lesser power 7406's (U5) because the light driver relays demand less power.

All indicator LED's as on the Character Driver Board have the same function on the Light Driver Boards Q1 (switchable 24V supply) is controlled as before in the Character Driver Board.

PECULIARITIES

The board is address selectable, but usually occupies a -70 or -80 slot.

TEST POINTS

TP1	Ground
TP2	+5V
TP3	Switched +24V

LED DISPLAY

The 16 indicator LED's show the condition of that output line. A lit LED is active or in the on state, indicating that its corresponding light is on.

ITM	ECO NO	REVISIONS DESCRIPTION	DATE	APPROVED
B				
C	0460	J1 WAS CHANGED FROM P/N 530-0016 TO P/N 530-0021	6/1/80	JW

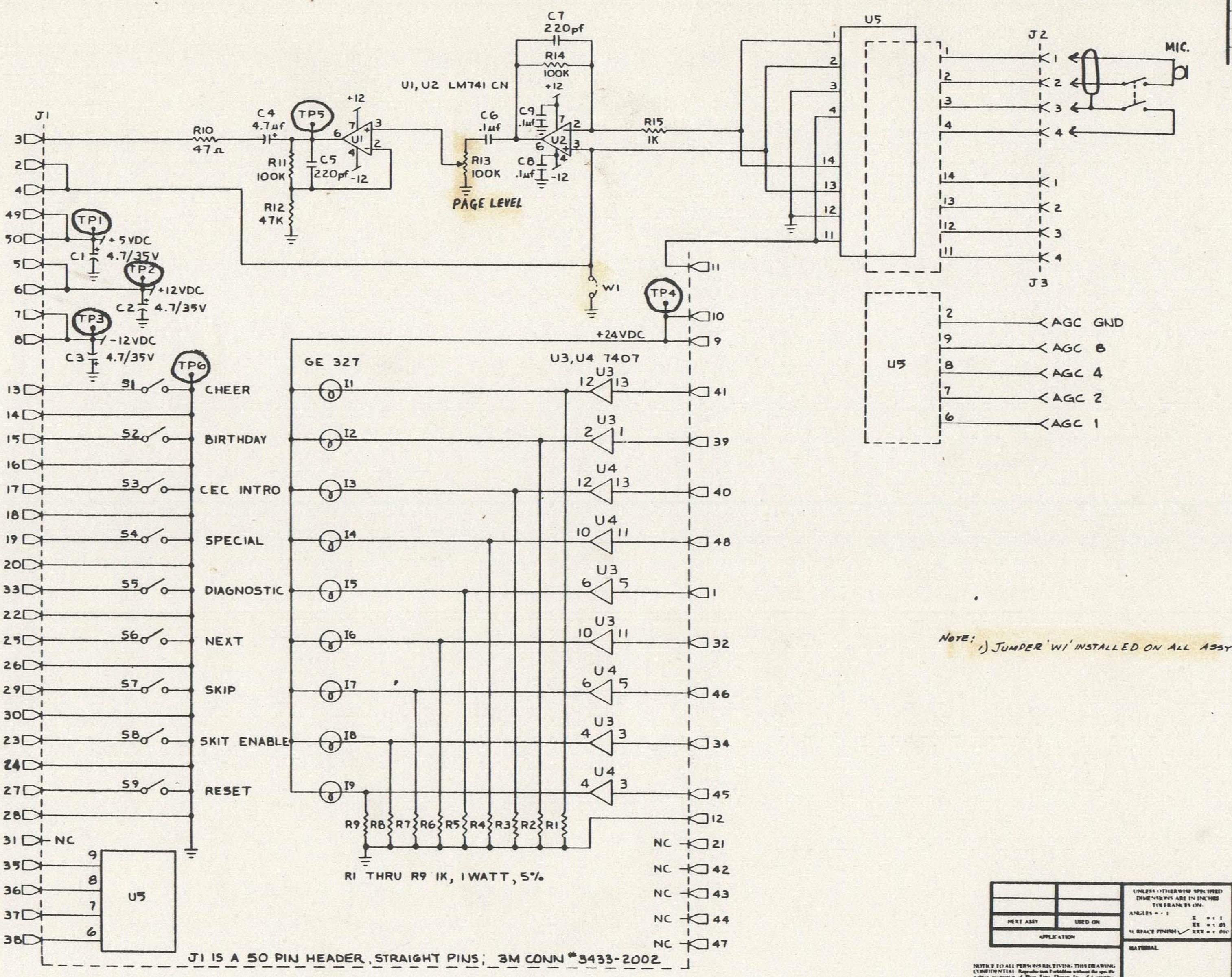

J1
R10 47Ω
C4 4.7µf
TP5
C5 220pf
R11 100K
R12 47K
U1, U2 LM741 CN
+12
-12
U1
C7 220pf
R14 100K
C6 .1µf
R13 100K
PAGE LEVEL
C9 .1µf
C8 .1µf
U2
R15 1K
W1
TP1
+5VDC
C1 4.7/35V
TP2
+12VDC
C2 4.7/35V
TP3
-12VDC
C3 4.7/35V
TP6
TP4
+24VDC
GE 327
U3, U4 7407
S1 CHEER
S2 BIRTHDAY
S3 CEC INTRO
S4 SPECIAL
S5 DIAGNOSTIC
S6 NEXT
S7 SKIP
S8 SKIT ENABLE
S9 RESET
I1
I2
I3
I4
I5
I6
I7
I8
I9
U3
U4
R9 R8 R7 R6 R5 R4 R3 R2 R1
R1 THRU R9 1K, 1 WATT, 5%
NC
U5
U5
J2
MIC.
J3
AGC GND
AGC 8
AGC 4
AGC 2
AGC 1
J1 IS A 50 PIN HEADER, STRAIGHT PINS; 3M CONN # 3433-2002

NOTE: 1) JUMPER 'W1' INSTALLED ON ALL ASSYS.

OUTSTANDING ECNs

NEXT ASSY	USED ON
APPLICATION	

UNLESS OTHERWISE SPECIFIED DIMENSIONS ARE IN INCHES TOLERANCES ON:
ANGLES ± 1
.X ± .1
.XX ± .03
SURFACE FINISH ✓ .XXX ± .010

MATERIAL

FINISH

DO NOT SCALE DRAWING

DRAWN BY DATE

CHECKED

ENGINEER A.G.G 9/24/79

PROJECT ENGINEER

MFG ENGINEER

Pizza Time Theatre Inc.
10060 Bubb Road
Cupertino, CA 95014

© 1979 Pizza Time Theatre Inc

TITLE SCHEMATIC CONTROL CONSOLE

SIZE D DRAWING NO 08 - 0007 REV C

SCALE NONE SHEET 1 OF 1

NOTICE TO ALL PERSONS RECEIVING THIS DRAWING CONFIDENTIAL [illegible]

CONTROL CONSOLE

DESCRIPTION

The control console allows a cyber system to be remotely operated from the Beverage Center. It duplicates the same commands as the control panel.

Two mic inputs are provided which are combined and sent with the switch data along a 50 conductor flat ribbon cable. The audio is gain adjustable and contains some feedback filtering.

FUNCTION

Op Amp U2 sums the two mic inputs. This amp boosts the gain by X100 and chops off the extremes in frequency. U1 is the line driver which feeds audio to the ribbon cable, it has a gain of X3.

The 9 non-debounced switchable grounds are outputted in parallel fashion. When open they are pulled high by internal pull up registers in Port A of U18 in the CPU card. These switches are mirrored by buffered lamp inputs. These lamps are under total software control.

PECULIARITIES

Different field installations may require more than 2 mic input jacks. The volume pot (R13) is field adjusted.

TEST POINTS

TP1	+5V
TP2	+12V
TP3	-12V
TP4	+12V
TP5	Audio Out
TP6	Ground

LAMP DISPLAY

Nine button buried lamps are driven by software control. If the CPU is not up, they do not work.

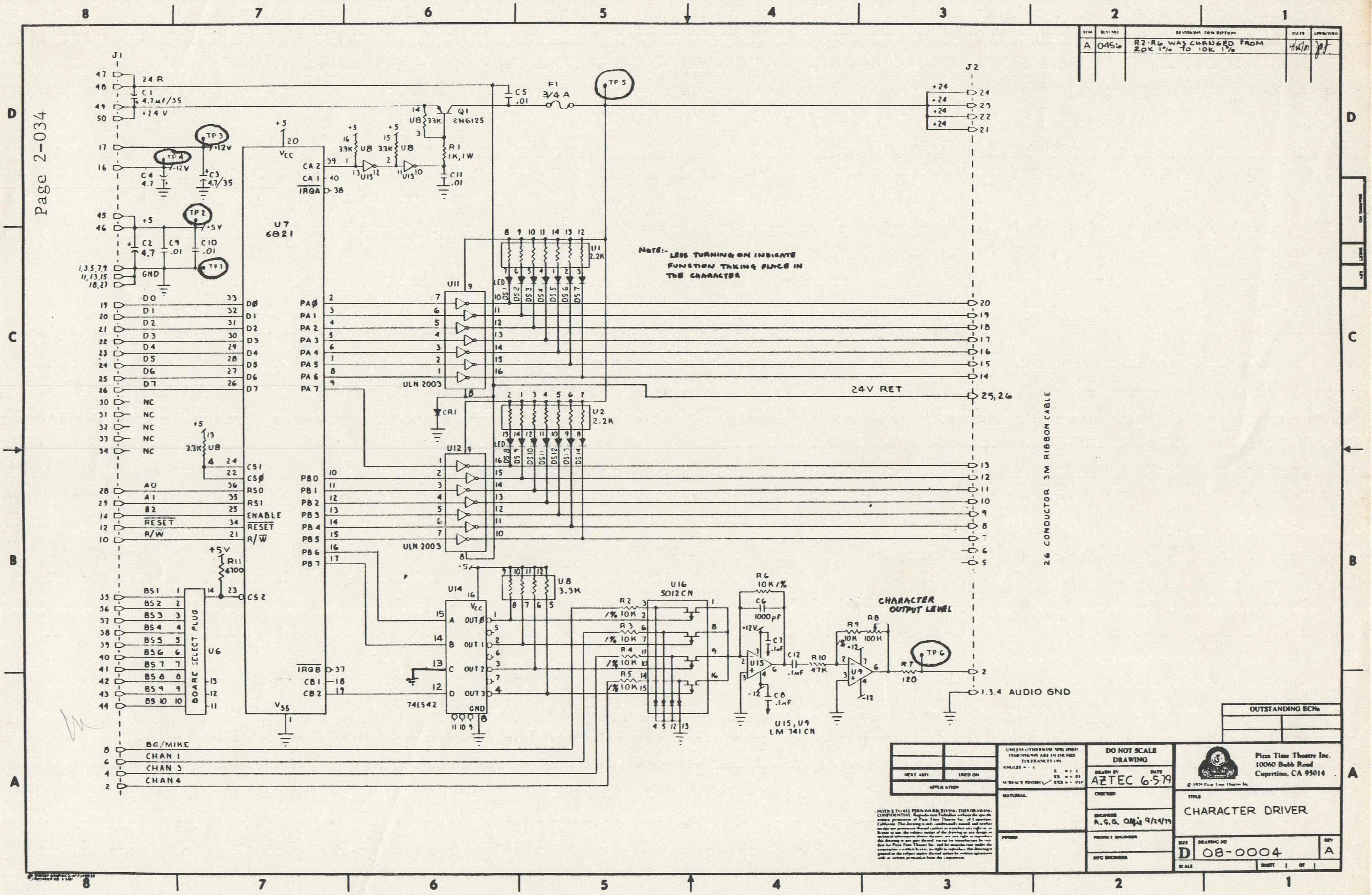
J1
47
48
24 R
C1
4.7uf/35
49
50
+24 V
17
16
TP 3
+12v
TP 4
-12V
C4
4.7
C3
4.7/35
45
46
+5
TP 2
+5V
C2
4.7
C9
.01
C10
.01
1,3,5,7,9
11,13,15
18,21
GND
TP 1
D0
D1
D2
D3
D4
D5
D6
D7
NC
A0
A1
B2
RESET
R/W
U7
6821
VCC
CA 2
CA 1
IRQA
PA0
PA1
PA2
PA3
PA4
PA5
PA6
PA7
CS1
CS0
RS0
RS1
ENABLE
RESET
R/W
CS2
PB0
PB1
PB2
PB3
PB4
PB5
PB6
PB7
IRQB
CB1
CB2
VSS
+5
R11
4700
BS1
BS2
BS3
BS4
BS5
BS6
BS7
BS8
BS9
BS 10
BOARD SELECT PLUG
U6
33K
U8
U13
R1
1K,1W
C11
.01
Q1
2N6125
C5
.01
F1
3/4 A
TP 5
J2
+24
U1
2.2K
LED
DS 1
DS 2
DS 3
DS 4
DS 5
DS 6
DS 7
U11
ULN 2003
CR1
U2
2.2K
DS 8
DS 9
DS 10
DS 11
DS 12
DS 13
DS 14
U12
ULN 2003
Note:- LEDS TURNING ON INDICATE FUNCTION TAKING PLACE IN THE CHARACTER
24V RET
25,26
26 CONDUCTOR 3M RIBBON CABLE
U14
74LS42
Vcc
A
B
C
D
OUT0
OUT 1
OUT2
OUT3
GND
U8
3.3K
U16
5012CN
R2
1% 10K
R3
1% 10K
R4
1% 10K
R5
1% 10K
R6
10K 1%
C6
1000pf
C7
.1uf
+12V
-12
C8
.1uf
U15
C12
.1uf
R10
47K
R9
10K
R8
100K
CHARACTER OUTPUT LEVEL
U9
+12
-12
R7
120
TP 6
U15, U9
LM 741 CN
1,3,4 AUDIO GND
BG/MIKE
CHAN 1
CHAN 3
CHAN 4
SYM
ECO NO
REVISIONS DESCRIPTION
DATE
APPROVED
A
0456
R2-R6 WAS CHANGED FROM 20K 1% TO 10K 1%
4/25/80
Jpt.
OUTSTANDING ECNs
NEXT ASSY
USED ON
APPLICATION
UNLESS OTHERWISE SPECIFIED DIMENSIONS ARE IN INCHES TOLERANCES ON:
ANGLES ± 1
X ±.1
XX ±.01
XXX ±.010
SURFACE FINISH
MATERIAL
FINISH
NOTICE TO ALL PERSONS RECEIVING THIS DRAWING: CONFIDENTIAL
DO NOT SCALE DRAWING
DRAWN BY
DATE
AZTEC 6-5-79
CHECKED
ENGINEER
A.G.G. 9/24/79
PROJECT ENGINEER
MFG ENGINEER
Pizza Time Theatre Inc.
10060 Bubb Road
Cupertino, CA 95014
© 1979 Pizza Time Theatre Inc.
TITLE
CHARACTER DRIVER
SIZE
D
DRAWING NO
08-0004
REV
A
SCALE
SHEET 1 OF

CHARACTER DRIVER BOARD

DESCRIPTION

The CDB provides 14 latched ground control output lines. Each line has a display LED which is on when that line is low (neg logic).

Also provided is a program controlled, fused +24 Vdc power source. On power up, the supply is cut off, later turned on by software.

The board also has a software selectable 4 channel audio switching circuit. The gain is adjustable on the final amplifier before it is presented to an external power amp.

FUNCTION

Each character has a separately addressable control card. This provides an interface between the CPU and the pneumatic solenoids used for character action. Power transistor Q1 is used to make the whole character disabled by switching off its solenoid power.

The latched data outputs provide a ground for each action. The LED and that solenoid both turn on when U7's output port line goes high.

The last two bits of the 16 available I/O lines from the PIA (U7) go to a 2 to 4 decoder (U14). These 4 outputs control a FET switch which select any of 4 audio channels. Op amps U15, and U9 perform a variable gain to be fed to an audio amp.

PECULIARITIES

Each board has an addressing plug (header), which selects one of ten software locations. This plug must be in to operate.

If the 24V return line is interrupted, the switched current will interfere with CPU logic and a down system will result! Verify CR1.

The 14 LED's indicate active state of the character's particular movements; they should all be off on power up.

TEST POINTS

TP1	Ground
TP2	+5V
TP3	+12V
TP4	-12V
TP5	+24V to character power
TP6	Audio Out

LED DISPLAY

Lit LED's indicate an active function for that character, should be off during power up.

C AND ROCKER STAGE SHOW LAYOUT

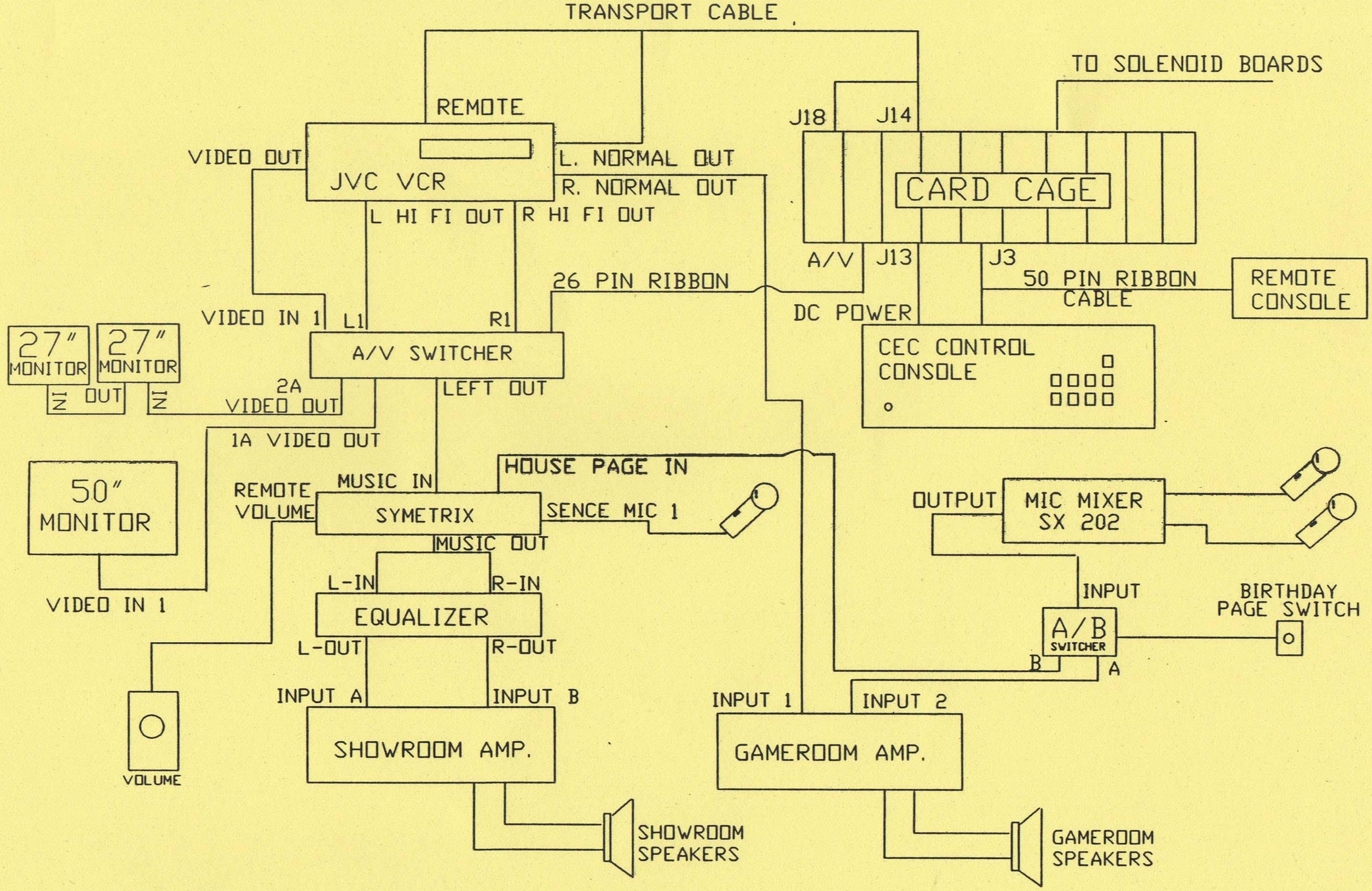
TRANSPORT CABLE
TO SOLENOID BOARDS
REMOTE
VIDEO OUT
JVC VCR
L. NORMAL OUT
R. NORMAL OUT
L HI FI OUT
R HI FI OUT
J18
J14
CARD CAGE
A/V
J13
J3
26 PIN RIBBON
50 PIN RIBBON CABLE
REMOTE CONSOLE
DC POWER
CEC CONTROL CONSOLE
VIDEO IN 1
L1
R1
A/V SWITCHER
27" MONITOR
27" MONITOR
IN
OUT
IN
2A VIDEO OUT
LEFT OUT
1A VIDEO OUT
50" MONITOR
VIDEO IN 1
REMOTE VOLUME
MUSIC IN
HOUSE PAGE IN
SYMETRIX
SENCE MIC 1
MUSIC OUT
OUTPUT
MIC MIXER SX 202
L-IN
R-IN
EQUALIZER
L-OUT
R-OUT
INPUT
A/B SWITCHER
B
A
BIRTHDAY PAGE SWITCH
VOLUME
INPUT A
INPUT B
SHOWROOM AMP.
INPUT 1
INPUT 2
GAMEROOM AMP.
SHOWROOM SPEAKERS
GAMEROOM SPEAKERS

CONFIDENTIAL

8-25-92